CTIA Certification

A Division of **CTIA**–The Wireless Association®

Test Plan for Wireless Device Over-the-Air Performance

Method of Measurement for Radiated RF Power and Receiver Performance

Revision Number	3.3.2
Date	September 2014

© 2001-2014 CTIA - The Wireless Association®. All rights reserved.

CTIA hereby grants to CTIA Authorized Testing Laboratories (CATLs), and only to CATLs, a limited, non-transferable license to use this Test Plan for the sole purpose of testing wireless devices for the CTIA Certification Program, and to reproduce this Test Plan for internal use only. Any other use of this Test Plan must be authorized in writing by CTIA.

Any reproduction or transmission of all or part of this Test Plan, in any form or by any means, electronic or mechanical, including photocopying, recording, or via any information storage and retrieval system, without the prior written permission of CTIA, is unauthorized and strictly prohibited.

Any reproduction of this Test Plan shall display the notice: "Copyright by CTIA. All rights reserved."

CTIA Certification Program
1400 16th Street N.W., Suite 600
Washington, DC 20036

E-mail: certification@ctia.org
Phone: 1.202.785.0081

http://www.ctia.org/certification

Acknowledgements

This test plan was created by the wireless industry with input from the following companies and their representatives:

Company, Representative	**Company,** Representative
7 Layers, Dominik Mente	**MultiTech Systems,** Terry Boe, Tom Hofstede
AT&T, Jan Chaffee, Dave Chapman, Virgilio Corral, Steve Harbin, Carl Martin, Scott Prather	**Nokia Corp.,** Bob Alexander, Randy Leenerts, Pertti Makikyro, Miia Nurkalla, Hugh Shapter, Jesse Torres
Bureau Veritas ADT, Fred Yang	**PCTEST Wireless,** Baron Chan, Luis Magana, Andrea Zaworski
CETECOM, Inc., Thomas Tam	**Research In Motion Limited,** Perry Jarmuszewski, Xin Jin, Yihong Qi, Qingmai Zhou
Clearwire, David Holmes, Michael Hart	**Rohde & Schwarz,** Christoph Gagern
Dell, Keith Hendrickson	**Qualcomm, Inc.,** Greg Breit, Pat Connor, Thom Erickson, Dennis Feenaghty, Paul Guckian, Sri Kasturi, Allen Tran
ETS-Lindgren, Michael Foegelle	**Satimo,** John Estrada, Per Iversen
Hewlett-Packard, Jim Cottrell, Isaac Lagnado, Glenn Meyer, Tim Neill	**Schmidt Consulting,** Lothar Schmidt
The Howland Company, Jamie Huff, Carl Sirles	**SGS-WTS,** Jason Bartosch, Chris Hiesberger
IT'IS Foundation, Niels Kuster	**Siemens ICM, LLC.,** Milton de Leon , Peter Nevermann
IndexSAR Ltd, David Riley	**Sony Ericsson, Inc.,** Ken Bednasz, Pierre Chery, George Daniel, Gerry Hayes, Matt Isley, Jim Sponsler
Intel, Hassan Yaghoobi	**SPEAG,** Erdem Ofli
Kyocera, Doug Dunn	**Spirent Communications,** Hakan Alparsan, Ron Borsato
Intertek, Kevin Colaco	**Sprint Nextel Corp.,** John Fessler, Alex Tkatch
Lenovo, Jim Salembier	**T-Mobile,** Uday Dodla, Fermin Romero

Company, Representative	**Company,** Representative
MCL Technology Limited, Phil Chadwick, Camelia Gabriel	**UL CCS,** Mike Heckrotte
Microsoft, Kevin Li	**Verizon Wireless,** Lou LaMedica, Wayne Wilson, Andrew Youtz
Motorola, Inc., David Bush, Eric Krenz, Philip Makotyn, Paul Moller, Andrew Pavacic, Paul Peterson, Jim Philips, Carl Seaberg, Roger Scheer	

Table of Contents

List of Figures 15
List of Tables 19

Section 1 Introduction
1.1 Purpose 26
1.2 Scope 26
1.3 Applicable Documents 26
1.4 Test Overview 29
1.5 Equipment Under Test (EUT) and Accessories—The Wireless Device . 30
1.6 Wireless Device Documentation 31

Section 2 Scope of Measurements
2.1 Equipment Under Test (EUT) Measurements—Transmitter 33
2.2 Equipment Under Test (EUT) Measurements—Receiver 33
2.3 Equipment Under Test (EUT) Measurements—General 33
2.4 Conical Cut Test Method 35
2.5 Great Circle Test Method 35
2.6 Theta Dependent Phi Step Size Optimization 38

Section 3 Test Site Characteristics and Quiet Zone Accuracy
3.1 Minimum Measurement Distance 39
3.2 Equipment Required 41
3.3 Test Frequencies 42
3.4 Terminology and Coordinate Systems 43
3.5 Basic Measurement Procedure 46
3.5.1 Probe Antenna Symmetry Test 46
3.5.2 Phi-Axis Ripple Test 47
3.5.3 Theta-Axis Ripple Test 49
3.5.4 Allowances and Adjustments 51
3.6 Additional Ripple Test Requirements for Notebook PC Sized Test Volumes 53
3.6.1 Probe Antenna Symmetry Test 54
3.6.2 Extensions to Phi-Axis Ripple Test 54
3.6.3 Extension to Theta Axis Ripple Test 55
3.6.4 Additions to Allowances and Adjustments 56
3.7 Applying the Ripple Test Procedure to Specific Systems 57
3.8 Analysis 60

Section 4 Range Reference Requirements

4.1 Theoretical Background . . . 62
4.2 Equipment Required . . . 65
4.3 Test Frequencies . . . 66
4.4 Test Procedure . . . 68
4.4.1 Measurement Step 1: Source Reference Test (Cable Calibration) 68
4.4.2 Measurement Step 2: Range Reference Test . . . 70
4.4.3 Calculating the Range Reference Path Loss . . . 71
4.5 Range Reference Measurement Data File . . . 74
4.6 Alternate Scenarios . . . 75
4.6.1 TRP Reference . . . 76
4.6.2 TIS Reference . . . 76
4.6.3 Ripple Based Calibration . . . 76
4.7 Wideband Channels . . . 77

Section 5 Test Procedure—Radiated Power

5.1 AMPS . . . 78
5.2 CDMA . . . 79
5.2.1 Test Procedure . . . 79
5.2.2 Criteria . . . 82
5.3 TDMA . . . 84
5.4 GSM . . . 85
5.4.1 Test Procedure . . . 85
5.4.2 Criteria . . . 87
5.5 GPRS . . . 88
5.5.1 Test Procedure . . . 88
5.5.2 Criteria . . . 89
5.6 EGPRS . . . 91
5.6.1 Test Procedure . . . 91
5.6.2 Criteria . . . 92
5.7 UMTS (W-CDMA) . . . 94
5.7.1 Test Procedure . . . 94
5.7.2 Criteria . . . 95
5.8 LTE . . . 97
5.8.1 Test Procedure . . . 97
5.8.2 Criteria . . . 99
5.9 CDMA 1xEV-DO DATA . . . 101
5.9.1 Test Procedure . . . 101
5.9.2 Criteria . . . 103

5.10 CDMA 1xRTT DATA . . . 106
5.10.1 Test Procedure . . . 106
5.10.2 Criteria . . . 109
5.11 Alternate Test Procedure for TRP . . . 112
5.11.1 Single Point Offset Test . . . 112
5.11.2 Multi-point Offset Test . . . 113

Section 6 Test Procedure—Receiver Performance

6.1 AMPS . . . 115
6.2 CDMA . . . 115
6.2.1 Test Procedure . . . 115
6.2.2 Criteria . . . 120
6.3 TDMA . . . 121
6.4 GSM . . . 122
6.4.1 Test Procedure . . . 122
6.4.2 Criteria . . . 126
6.5 GPRS . . . 127
6.5.1 Test Procedure . . . 127
6.5.2 Criteria . . . 132
6.6 EGPRS . . . 133
6.6.1 Test Procedure . . . 133
6.6.2 Criteria . . . 137
6.7 UMTS (W-CDMA) . . . 138
6.7.1 Test Procedure . . . 138
6.7.2 Criteria . . . 143
6.8 LTE . . . 144
6.8.1 Test Procedure without Complex Pattern Data . . . 144
6.8.2 Test Procedure with Complex Pattern Data . . . 148
6.8.3 LTE Intermediate Channel Measurements . . . 150
6.8.4 Criteria . . . 154
6.9 CDMA 1xEV-DO DATA . . . 155
6.9.1 Test Procedure . . . 155
6.9.2 Criteria . . . 160
6.10 CDMA 1xRTT DATA . . . 160
6.10.1 Test Procedure . . . 160
6.10.2 Criteria . . . 165
6.11 CDMA with Receive Diversity . . . 166
6.11.1 Test Procedure . . . 166
6.11.2 Criteria . . . 167

6.12 UMTS Two-Branch Receive Diversity . . . 168
6.12.1 Test Procedure . . . 168
6.12.2 Criteria . . . 169
6.13 GPS . . . 170
6.13.1 GPS for CDMA Devices . . . 171
6.13.1.1 Test Procedure . . . 171
6.13.1.2 Criteria . . . 174
6.13.2 GPS for GSM/UMTS Devices . . . 174
6.13.2.1 Test Procedure . . . 175
6.13.2.2 Criteria . . . 181
6.13.3 GPS for LTE Devices . . . 181
6.13.3.1 Test Procedure . . . 182
6.13.3.2 Criteria . . . 188
6.14 FLO (Forward Link Only) . . . 190
6.15 Alternate Test Procedure for TIS . . . 190
6.15.1 Single Point Offset Test . . . 191
6.15.2 Multi-point Offset Test . . . 192
6.16 Alternate Test Procedure for GSM TIS Using Less Than Maximum TX Power . . . 192
6.17 Alternate TIS Test Procedure based on Receive Signal Strength (RSS) . 193
6.17.1 RSS Pattern Measurement . . . 193
6.17.2 RSS Pattern Linearization . . . 194
6.17.3 Sensitivity Search . . . 195
6.17.4 RSS Data Format . . . 196
6.17.4.1 RSS Data Stored Locally on EUT . . . 196
6.17.4.2 RSS Data Reported Via Over-The-Air Messaging . . . 197
6.17.5 Error Rate Data Format . . . 197
6.17.5.1 Error Rate Data Stored Locally on EUT . . . 198
6.17.5.2 Error Rate Data Reported Via Over-The-Air Messaging 199
6.17.6 Final TIS Calculation . . . 199

Section 7 Measurement Uncertainty

7.1 TRP Tests . . . 201
7.1.1 EUT Measurement . . . 202
7.1.2 Reference Measurement . . . 204
7.1.3 Calculation of the Combined and Expanded Uncertainties for the Overall TRP Measurement . . . 206
7.2 TIS Tests . . . 206
7.2.1 EUT Measurement . . . 206

7.2.2 Reference Measurement 208
7.2.3 Calculation of the Combined and Expanded Uncertainties for the Overall TIS Measurement 209
7.3 Alternate Test Procedure for TRP Measurements 210
7.4 Alternate Test Procedure for TIS Measurements 212
7.5 Criteria—Measurement Uncertainty 214

Appendix A Test Set-up Configurations (Normative)
A.1 Positioning Requirements and Coordinate Systems 216
A.1.1 Free-Space 216
A.1.2 Head Phantom Only 218
A.1.3 Hand Phantom Selection Process 221
A.1.4 Head and Hand Phantom (“Talk Mode”) 222
A.1.4.1 Mounting Monoblock EUT in Monoblock Hand Phantom for Talk Mode 226
A.1.4.2 Mounting Fold EUT in Fold Hand Phantom for Talk Mode . 228
A.1.4.3 Mounting Wide EUT in PDA Hand Phantom for Talk Mode 230
A.1.5 Hand Phantom Only 232
A.1.5.1 Mounting a Narrow EUT in the Narrow Hand Phantom for Data Mode 233
A.1.5.2 Mounting a Wide EUT in the PDA Phantom for Data Mode 235
A.2 Test Systems Set-up 236
A.3 Test Setup—Instrumentation 237

Appendix B Reporting of Test Results (Normative)
B.1 EUT Measurement Data Files 352
B.2 Calculating Spatially Averaged Quantities 355
B.2.1 Total Radiated Power 355
B.2.2 Near-Horizon Partial Radiated Power 356
B.2.3 Total Isotropic Sensitivity 357
B.2.4 Near-Horizon Partial Isotropic Sensitivity 358
B.2.5 Upper Hemisphere Isotropic Sensitivity (UHIS) 360
B.2.6 Partial Isotropic GPS Sensitivity (PIGS) 361
B.3 3-D Plots 362
B.4 Range Reference Measurement Data File 362
B.5 Photographs and Identification of Hand Phantoms 362

Appendix C SAM Head and Hand Phantom Definitions and EUT Test Positions (Normative)

C.1 SAM Head Phantom—Reference Information . . . 363
C.2 Head Phantom Definitions and Requirements . . . 364
C.2.1 Head Phantom Definition . . . 364
C.2.2 Head Phantom Dielectric Parameters . . . 366
C.2.3 Head Fixturing Requirements . . . 367
C.3 Hand Phantom—Reference Information . . . 368
C.3.1 Hand Anthropometric Research . . . 368
C.3.2 Hand Reference Dimensions . . . 369
C.3.3 Hand Reference Dielectric Parameters . . . 374
C.4 Hand Phantom Definitions and Requirements . . . 375
C.4.1 Dielectric Parameter Requirements . . . 375
C.4.2 Hand Phantom Identification . . . 375
C.4.3 Hand Mechanical Requirements . . . 375
C.4.4 Hand Phantom Fixturing Requirements . . . 377
C.4.5 Monoblock Hand Phantom . . . 377
C.4.6 Fold Hand Phantom . . . 378
C.4.7 Narrow Data Hand Phantom . . . 379
C.4.8 PDA (Personal Digital Assistant) Grip Hand Phantom . . . 380
C.4.9 Alternative Hand Phantoms . . . 381

Appendix D Power Measurement Considerations (Normative)

D.1 Power Measurement Equipment . . . 382
D.2 General Measurement Requirements . . . 383
D.2.1 Use of Spectrum Analyzers . . . 384
D.2.2 Use of Communication Testers . . . 384
D.2.3 Use of Power Meters . . . 385
D.2.3.1 Ratio of Reverse-to-Forward Signal Level . . . 385
D.2.3.2 Ratio of Reverse Signal Level-to-Noise . . . 388
D.3 TDMA . . . 389
D.4 GSM/GPRS (GMSK Modulation) . . . 389
D.5 EGPRS/EDGE (8PSK Modulation) . . . 392
D.6 AMPS . . . 397
D.7 CDMA . . . 397
D.8 W-CDMA (UMTS) . . . 400
D.8.1 Determining the RBW/NBW Correction Factor . . . 404
D.9 LTE . . . 409

Appendix E Total Isotropic Sensitivity and Total Radiated Power Derivations (Informative)
E.1 Total Isotropic Sensitivity . . . 413
E.2 Total Radiated Power . . . 419
E.3 Conversion of Integrals to Summations of Discretely Sampled Pattern Data . . . 421
E.4 Total Isotropic Sensitivity Estimator Based on RSS-Based Methods . 425

Appendix F Symmetry Pattern Antenna (Informative)
F.1 Symmetry Pattern vs. Absolute Accuracy . . . 428

Appendix G Instructions for Calculating Standard Uncertainty Values (Normative)
G.1 Mismatch . . . 430
G.2 Cable Factor . . . 432
G.3 Insertion Loss . . . 432
G.4 Receiving Device (Spectrum Analyzer, Measurement Receiver or Base Station Simulator) . . . 433
G.5 Signal Generator or Base Station Simulator . . . 433
G.6 Gain of the Calibrated Reference Antenna . . . 434
G.7 Measurement Distance . . . 435
G.7.1 Offset of the Phase Center of the EUT from Axis(es) of Rotation . 435
G.7.2 Offset of the Phase Center of the Calibrated Reference Antenna from Axis(es) of Rotation . . . 436
G.7.3 Blocking Effect of the EUT on the Measurement Antenna (if too close) 436
G.7.3.1 VSWR . . . 437
G.7.3.2 Chamber Standing Wave . . . 438
G.7.4 Additional Measurement Uncertainties for Inadequate Measurement Distance . . . 439
G.8 Signal Level Ripple Within Quiet Zone . . . 440
G.8.1 Effect of Ripple on TRP and TIS Integration . . . 440
G.8.1.1 Applying the Surface Standard Deviation . . . 441
G.8.1.2 Analysis of Uncertainty vs. Error Contribution . . . 442
G.8.2 Effect of Ripple on Range Reference Measurement . . . 444
G.9 Influence Quantities . . . 445
G.10 Uncertainties of Head, Hand and Positioning of EUT in the Hand and Against the Head Phantoms . . . 447
G.10.1 Concept of Phantom and Positioning Uncertainties . . . 448
G.10.2 Head Phantom Uncertainty . . . 448
G.10.3 Hand Phantom Uncertainty . . . 450

G.10.4 Head and Hand Phantom Fixtures Uncertainty 454
G.10.4.1 Experimental Evaluation 454
G.10.4.2 Numerical Evaluation 456
G.10.5 Phone Positioning Uncertainty 456
G.10.5.1 Experimental Evaluation 458
G.10.5.2 Numerical Evaluation 460
G.10.6 Estimation of Dielectric Parameter Measurement Uncertainties . . 461
G.10.7 Uncertainty for Reasonably Worst-case Head, Hand and EUT Positioning in the Hand and Against the Head 464
G.10.8 Uncertainties of Hand Phantom Fixture and Phone Positioning in Data Mode Testing 467
G.11 Sensitivity Search Step Size 468
G.12 Coarse Sampling Grid in TIS Measurements 468
G.13 Miscellaneous Uncertainty 469
G.14 TIS Normalization Uncertainty 469
G.15 Effect of Theta Dependent Phi Optimization on TIS 470
G.16 Linearization of RSS Measurements 471
G.17 Uncertainty of RSS Data From EUT 471
G.18 Reporting Mechanism for RSS Data From EUT 471
G.19 Special Considerations for Notebook Computers 472
G.19.1 Measurement Distance 472
G.19.2 Offset of the Phase Center of the EUT from the Axis(es) of Rotation . 473
G.19.3 VSWR 474
G.19.4 Chamber Standing Wave 474
G.19.5 Phase Curvature Across the EUT 474
G.19.6 Signal Level Ripple within the Quiet Zone 474
G.20 Uncertainty due to Difference in Gain over Different Channel Bandwidths 475
G.21 EUT Positioning/Repositioning Uncertainty 475
G.22 Test System Frequency Flatness Uncertainty 476

Appendix H Tissue Equivalent Dielectric Property Measurements (Normative)
H.1 Measurement Techniques 478
H.2 Open-ended Coaxial Probe (OCP) Method 479
H.2.1 OCP Equipment Set-up 482
H.2.2 Measurement Procedure 484
H.3 TEM Transmission Line Method 485
H.3.1 TEM Equipment Set-up 485
H.3.2 Measurement Procedure 489

Appendix I Assessment of Uncertainty Values using Simulation Tools (Normative)
I.1 Introduction . . . 490
I.2 Requirements for the Simulation Software . . . 490
I.3 Simulation Software Validation . . . 491
I.4 Phone Validation . . . 491
I.5 Computation of the Uncertainty for Type B Evaluation . . . 491
I.6 Computation of the Uncertainty for Type A Evaluation . . . 491
I.7 Numerical Evaluation of Head and Hand Phantom Fixtures Uncertainty . 492
I.8 Numerical Evaluation of Phone Positioning Uncertainty . . . 492
I.9 Numerical Evaluation of Head and Hand Phantom Shape Uncertainty493
I.10 Numerical Evaluation of Head Phantom Support Material Uncertainty . . 494

Appendix J Lab Repeatability Evaluation (Normative)

Appendix K Intermediate Channel Lists (Normative)
K.1 CDMA Intermediate Channel List . . . 497
K.2 GSM Intermediate Channel List . . . 504
K.3 UMTS (W-CDMA) Intermediate Channel List . . . 505
K.4 LTE Intermediate Channel List . . . 507

Appendix L Notebook and Tablet Appendix (Normative)
L.1 Purpose . . . 510
L.2 Scope . . . 510
L.3 Definitions . . . 510
L.4 Equipment Under Test - Setup . . . 511
L.5 Testing of Physically Reconfigurable Devices . . . 512
L.6 Notebooks and Tablets with Extendable/Retractable Antennas . . . 512
L.7 Multi-Protocol Devices . . . 512
L.8 Free Space Testing . . . 512
L.9 Chamber Placement . . . 513
L.9.1 Positioning a Notebook Relative to the Chamber Coordinate System 513
L.9.1.1 Distributed-Axis, Conical Cut Chamber . . . 514
L.9.1.2 Combined-Axis, Great Circle Chamber . . . 515
L.9.2 Positioning a Tablet Relative to the Chamber Coordinate System 515
L.9.2.1 Distributed-Axis, Conical Cut Chamber . . . 516
L.9.2.2 Combined-Axis, Great Circle Chamber . . . 517

L.9.3 Minimum Measurement Distance Considerations . . . 517
L.10 Additional Measurement Uncertainty . . . 518
L.10.1 Ripple Uncertainty . . . 518
L.10.2 Uncertainty Due to Minimum Measurement Distance . . . 518
L.10.3 Additional Coarse Sampling Grid Uncertainty . . . 518

Appendix M Optional GSM, UMTS and LTE Bands (Informative)
M.1 Optional Frequency Bands and Channel Configurations . . . 519
M.2 Considerations in Measurements of TRP for LTE TDD UEs . . . 523
M.3 Requirements for Measurement of Optional LTE Channel Bandwidths . . . 523

Appendix N Path Loss Errors Induced by Propagation Delay (Informative)
N.1 Description and Overview . . . 524
N.2 Verification Principles . . . 524
N.3 CW Verification Procedure . . . 525

Appendix O Recommended Use Cases and Special Test Requirements (Informative)
O.1 Purpose . . . 526
O.2 Definitions . . . 526
O.3 Testing Required—Head and Hand Phantom, and Free-Space . . . 526
O.4 Testing Required - Hand Phantom Only . . . 527
O.5 Testing Required—Free-Space Only . . . 527
O.6 Testing Not Required . . . 529
O.7 Special Test Requirements . . . 530
O.7.1 LTE Relative Sensitivity on Intermediate Channels Test . . . 530
O.7.2 CDMA 2100/1700 Relative Sensitivity on Intermediate Channels Test 532
O.7.3 Removal of Single Orientation Allowance in the Relative Sensitivity on Intermediate Channel Testing . . . 532
O.7.4 Waiver for LTE A-GPS OTA Testing when using LPP as a Positioning Protocol . . . 532
O.7.5 CDMA 800 Intermediate Channel List . . . 532
O.7.6 Waiver of UE Based Testing for A-GPS OTA for LTE . . . 532
O.7.7 Removal of Head Adjacent A-GPS OTA for LTE Testing for Devices that do not Support VoIP . . . 532
O.7.8 OTA Testing of Devices Containing Multiple TX Antennas . . . 533
O.7.8.1 Devices where the Active TX Antenna Could Change During the Execution of the Test Cases . . . 533
O.7.8.2 Devices where the Active TX Antenna Does Not Switch

During the Execution of the Test Cases 534
O.7.9 Modifications to Phone Positioning Uncertainty 534
O.7.9.1 Experimental Evaluation 536
O.7.9.2 Numerical Evaluation 537

Appendix P Integrated Device Appendix (Normative)

P.1 Purpose 539
P.2 Scope 539
P.3 Equipment Under Test - Setup 539
P.4 Testing of Physically Reconfigurable Devices 540
P.5 Integrated Devices with Extendable/Retractable Antennas 540
P.6 Multi-Protocol Devices 540
P.7 Free Space Testing 541
P.8 Chamber Placement 541
P.8.1 Positioning an Integrated Device Relative to the Chamber Coordinate System 541
P.8.2 Minimum Measurement Distance Considerations 542
P.9 Additional Measurement Uncertainty 543
P.9.1 Ripple Uncertainty 543
P.9.2 Uncertainty Due to Minimum Measurement Distance 543
P.9.3 Additional Coarse Sampling Grid Uncertainty 543

Appendix Q List of Cited References (Informative)

Appendix R Revision History

List of Figures

Figure 2-1 Great Circle Cuts and Measurement Points (for 30 Degree Grid) . . . 37
Figure 2-2 The Great Circle T0 Cut . . . 37
Figure 3-1 Spherical Coordinate System . . . 43
Figure 3-2 Measurement Antenna Polarizations . . . 44
Figure 3-3 Spherical Coverage and Orientation of Support Structure with Respect to Coordinate System . . . 45
Figure 3-4 Illustrations of Typical Distributed-axis System (a) and Combined-axis System (b) . . 46
Figure 3-5 Phi-axis Test Geometry . . . 48
Figure 3-6 Theta-axis Test Geometry . . . 49
Figure 3-7 Illustration of Alternate Probe Positions Allowed for Theta-axis Test . . . 52
Figure 3-8 Illustration of the Increase in Test Volume for Notebook PCs . . . 54
Figure 3-9 Illustration of the Additional Phi-axis Ripple Test Locations for Notebook PCs . . . 55
Figure 3-10 Illustration of the Additional Theta-axis Ripple Test Locations for Notebook PCs . . . 55
Figure 3-11 Phi-axis Test Geometry for Typical Distributed Axis System (a), and a Typical Combined Axis System (b) . . . 58
Figure 3-12 Theta-axis Test Geometry for Typical Distributed Axis System (a), and a Typical Combined Axis System (b) . . . 58
Figure 3-13 Example Illustrating Some Allowed Alterations of Test Setup for Phi-axis . . . 59
Figure 3-14 Example Illustrating Alternate Positions and Allowed Alterations for Theta-axis Test 59
Figure 3-15 Geometry for Law of Cosines Range Length Adjustment . . . 60
Figure 4-1 Theoretical Case for Determining Path Loss . . . 63
Figure 4-2 Typical Configuration for Measuring Path Loss . . . 64
Figure 4-3 Cable Reference Calibration Configuration . . . 64
Figure 6-1 Illustration of Relative Sensitivity on Intermediate Channels Test. Green Lines Indicate a Pass-fail Test Performed (Margin + 3) dB Above the Corresponding EIS Level of the Nearest Channel For Which a Full TIS Measurement Was Performed . . . 120
Figure A-1 EUT Vertical And Horizontal Reference Lines . . . 217
Figure A-2 EUT Coordinate System - Free Space . . . 218
Figure A-3 SAM Head Phantom with Mouth and Ear Locations . . . 219
Figure A-4 EUT Position: “Cheek” Or “Touch” Positions for Right Ear . . . 220
Figure A-5 Definition of Coordinate System for SAM Head Phantom . . . 220
Figure A-6 Alternate Coordinate System for SAM Head Phantom . . . 221
Figure A-7 Choosing the Correct Hand Phantom . . . 222
Figure A-8 Optional Head Phantom Mask Spacer on SAM Head Phantom . . . 223
Figure A-9 Head And Hand Configuration (a) With and (b) Without Mask Spacer(Right), (c) With and (d) Without Mask Spacer (left) . . . 226
Figure A-10 Alignment Tool A . . . 227
Figure A-11 Monoblock Palm Spacer . . . 228
Figure A-12 Alignment Tool B and Usage with Fold EUT . . . 229
Figure A-13 Usage of Alignment Tool B with Open Portrait Slide EUT . . . 230
Figure A-14 Fold Palm Spacer . . . 230

Figure A-15 PDA Palm Spacer . . . 231
Figure A-16 Positioning of Wide EUT With Respect to PDA Palm Spacer . . . 232
Figure A-17 EUT Display Alignment Features . . . 233
Figure A-18 Definition of Coordinate System for EUT with Hand Phantom in Data Mode. 233
Figure A-19 Measuring a Narrow EUT in Alignment Tool A for Hand Only (“Data Mode”) Testing . . 235
Figure A-20 Narrow Data Palm Spacer . . . 235
Figure A-21 Typical Setup for a Combined Axis System . . . 236
Figure A-22 Typical Setup for a Distributed Axis System . . . 237
Figure A-23 Simplified Block Diagram Showing a Common Configuration for the use of a Base Station Simulator for TRP Measurements. The Forward Link Communication is Transmitted Through the Communication Link Antenna and the Reverse Link is Received Through the Measurement Antenna. This Configuration Supports Amplification of Both Signal Paths if Necessary. . . . 238
Figure A-24 Simplified Block Diagram Showing a Common Configuration for TIS Measurements. The Forward Link Communication is Transmitted Through the Measurement Antenna and the Reverse Link is Received Through the Communication Link Antenna. This Configuration Supports Amplification of Both Signal Paths if Necessary. . . . 238
Figure A-25 Simplified Block Diagram Showing a Common Configuration for the use of a Spectrum Analyzer Power Meter or Other Dedicated Receiver for TRP Measurements. Both Forward and Reverse Link Communications Between the Mobile and Base Station Simulator Are Carried Out Through a Separate Communication Link Antenna. . . . 239
Figure A-26 Simplified Block Diagram Showing a Common Configuration for the use of Spectrum Analyzer Power Meter or Other Dedicated Receiver for TRP Measurements. Forward Link Communication Between the Mobile and Base Station Simulator is Carried Out Through a Separate Communication Link Antenna While the Reverse Link is Carried Through The Measurement Antenna. . . . 239
Figure A-27 Simplified Block Diagram Illustrating a Method of Externally Amplifying Both Forward and Reverse Link Communication Signals and Combining Them Into One Signal Routed To/from One (or More) Measurement Antenna(S). This Configuration Supports Both TRP and TIS Measurements . . . 240
Figure A-28 Simplified Block Diagram Showing a Common Configuration for the use of Dual Spectrum Analyzers, Power Meters, or Other Dedicated Receivers for TRP Measurements. Both Forward and Reverse Link Communications Between the Mobile and Base Station Simulator Are Carried Out Through a Separate Communication Link Antenna . . . 240
Figure A-29 Simplified Block Diagram Showing a Common Configuration for the use of Dual Spectrum Analyzers, Power Meters, or Other Dedicated Receivers for TRP Measurements. Forward Link Communication Between the Mobile and Base Station Simulator is Carried Out Through a Separate Communication Link Antenna While the Reverse Link is Carried Out Through the Measurement Antenna. . . . 241
Figure C-1 Front, Back and Side View of the Sam Head Phantom/head Phantom . . . 364
Figure C-2 the Required SAM Head Phantom . . . 365
Figure C-3 Pictorial of Human Hand with Dimension Labels . . . 372
Figure C-4 Open Hand Phantom . . . 373
Figure C-5 Conformal Fingertip Weight Container . . . 376
Figure C-6 Measuring the Hand Phantom Material Stiffness . . . 376
Figure C-7 Monoblock Hand Phantom; (a) Left Hand; (b) Right Hand. . . . 378

Figure C-8 Fold Hand Phantom; (a) Left Hand; (b) Right Hand 379
Figure C-9 Narrow Data Hand Phantom; (a) Left Hand; (b) Right Hand 380
Figure C-10 PDA Hand Phantom; (a) Left Hand; (b) Right Hand 381
Figure D-1 Use of Auxiliary Antenna for Forward Channel 386
Figure D-2 Use of Measurement Antenna for Forward Channel 387
Figure D-3 Sample GSM Power Envelope with Acceptable Resolution. 390
Figure D-4 Sample GSM Power Envelope with Insufficient Resolution 391
Figure D-5 Sample GSM PUlses Showing Increase in Noise as Signal Approaches Trigger Level 391
Figure D-6 Sample 8-PSK Power Envelope with Acceptable Resolution 393
Figure D-7 Multiple 8-PSK Pulses with Random Data Content 394
Figure D-8 Example Of GMSK Bursts Mixed in with 8-PSK Data 395
Figure D-9 Sample 8-PSK Pulses Showing Mis-triggering and Increase in Noise at Low Levels . . 395
Figure D-10 Sample Multislot 8-PSK Pulses 396
Figure D-11 Bad 8-PSK Multislot Trace Resulting From GMSK Burst 396
Figure D-12 Bad 8-PSK Multislot Trace Resulting From Mis-triggering 397
Figure D-13 Comparison of CDMA Power Envelope Using Peak, RMS, and Sample Detectors 399
Figure D-14 Example of Running Average Used to Qualify Sample Detector Sweep 399
Figure D-15 Example of Running Average when More Points are Used 400
Figure D-16 Example of Valid Frequency Response Trace Using RMS Detector 403
Figure D-17 Example of Valid Frequency Response Trace Using Sample 403
Figure D-18 Example of a Signal Drop-out During an RMS Sweep. 404
Figure D-19 Illustration of the Difference Between Noise Bandwidth and Data Point Width in the Integrated Channel Power Formula 405
Figure D-20 Comparison of a Gaussian Shaped RBW Filter to a Rectangular NBW with the Same Frequency Bandwidth. 406
Figure D-21 Example of a Flat Top Filter With 30 kHz RBW 407
Figure D-22 Example of Valid LTE Frequency Response Trace Using RMS Detector. 411
Figure D-23 Example of Valid LTE Wideband Time Response Trace Using RMS Detector 412
Figure E-1 TIS 413
Figure E-2 TRP 419
Figure G-1 Ten Locations of Dielectric Measurements at the Brick Hand Surface. 452
Figure G-2 Ten Locations of Dielectric Measurements at the Fold Hand Surface 453
Figure G-3 Ten Locations of Dielectric Measurements at the Narrow Data Hand Surface 453
Figure G-4 Ten Locations of Dielectric Measurements at the PDA Hand Surface 454
Figure G-5 Phone Positioning Uncertainty Components 461
Figure H-1 Setup for Fixed Displacement Measurement 480
Figure H-2 Setup for Fixed Pressure Measurement 481
Figure H-3 Open-ended Coaxial Probe with Inner and Outer Radii A and B, Respectively . . . 483
Figure H-4 Calibration of VNA using a Dummy Probe Whose Electrical Length is the same as the Actual OCP 484
Figure H-5 TEM Transmission Line Dielectric Measurement Method Setup 486

Figure H-6 Geometry of the Sample Holder (Dielectric Test Cell, Dimensions in mm) 487
Figure H-7 Construction Diagram of Strip-line TEM Sensor (All Dimensions in mm) 488
Figure L-1 Position of Notebook Relative to the Chamber Coordinates 514
Figure L-2 Position of Tablet Relative to the Chamber Coordinates 516
Figure O-1 Phone Positioning Uncertainty Components 538
Figure P-1 Internal Antenna 542
Figure P-2 Direct connect external antenna (it does not matter where the antenna is located as you will center on the device) 542

List of Tables

Table 3-1 Minimum Measurement Distance for Handheld EUTs 40
Table 3-2 Derivation of Minimum Measurement Distance for handheld EUTs (Informative Only) . 41
Table 3-3 Quiet Zone Accuracy Frequencies 42
Table 3-4 Example Scenarios for Reduced Angular Resolution Ripple Tests 53
Table 4-1 Test Frequencies For The Reference Measurement 66
Table 4-2 Example Range Reference Measurement Data Record 72
Table 4-3 Sample Range Reference Measurement Data File Format 74
Table 5-1 CDMA Base Station Parameters—Cellular Band 79
Table 5-2 CDMA Base Station Parameters—PCS Band 80
Table 5-3 CDMA Base Station Parameters—AWS-1 Band 80
Table 5-4 CDMA Test Frequencies 81
Table 5-5 CDMA Minimum TRP Level (in dBm) Requirements for the Primary Mechanical Mode[1] 82
Table 5-6 PCL Setting for GSM 850 85
Table 5-7 PCL Setting for GSM 1900 86
Table 5-8 GSM RX and TX Test Frequencies 86
Table 5-9 GSM Minimum TRP Level (in dBm) Recommended Limits for the Primary Mechanical Mode[1] 87
Table 5-10 PCL and Gamma Setting for GMSK Modulation in GSM 850 Band 88
Table 5-11 PCL and Gamma Setting for GMSK Modulation in GSM 1900 Band 89
Table 5-12 Coding Scheme (CS) Setting for GMSK Modulation in Either GSM 850 or GSM 1900 Band 89
Table 5-13 GPRS Minimum TRP Level (in dBm) Recommended Limits for the Primary Mechanical Mode[1 2] 90
Table 5-14 PCL and Gamma Setting for 8-PSK Modulation (EDGE) in GSM 850 Band 91
Table 5-15 PCL and Gamma Setting for 8-PSK Modulation (EDGE) in GSM 1900 Band 92
Table 5-16 Modulation Coding Scheme (MCS) Setting for 8-PSK Modulation (EDGE) in Either GSM 850 or GSM 1900 Band 92
Table 5-17 EGPRS Minimum TRP Level (in dBm) Recommended Limits for the Primary Mechanical Mode[1 2] 93
Table 5-18 UMTS RX and TX Test Frequencies 95
Table 5-19 UMTS Minimum TRP Level (in dBm) Recommended Limits for the Primary Mechanical Mode[1] 96
Table 5-20 LTE TRP Measurements Table for the Primary Mechanical Mode[1] 97
Table 5-21 LTE TRP Criteria Table for the Primary Mechanical Mode[1] 100
Table 5-22 CDMA 1xEV-DO Base Station Parameters - Cellular Band 102
Table 5-23 CDMA 1xEV-DO Base Station Parameters - PCS Band 102
Table 5-24 CDMA 1xEV-DO Base Station Parameters - AWS-1 Band 102
Table 5-25 CDMA 1xEV-DO DATA Minimum TRP Level (in dBm) Requirements for the Primary Mechanical Mode[1] 103

Table 5-26 CDMA Base Station Parameters - Cellular Band . . . 107
Table 5-27 CDMA Base Station Parameters - PCS Band . . . 107
Table 5-28 CDMA Base Station Parameters - AWS-1 Band . . . 108
Table 5-29 CDMA 1xRTT Data Minimum TRP Level (in dBm) Requirements for the Primary Mechanical Mode[1] . . . 109
Table 6-1 CDMA Maximum TIS Level (in dBm) Requirements for the Primary Mechanical Mode[1] 121
Table 6-2 GSM Maximum TIS Level (in dBm) Recommended Limits for the Primary Mechanical Mode[1] . . . 126
Table 6-3 GPRS Maximum TIS Level (in dBm) Recommended Limits for the Primary Mechanical Mode[1] . . . 132
Table 6-4 EGPRS Maximum TIS Level (in dBm) Recommended Limits for the Primary Mechanical Mode[1] . . . 138
Table 6-5 UMTS Minimum TIS Level (in dBm) Recommended Limits for the Primary Mechanical Mode[1] . . . 143
Table 6-6 LTE TIS Measurements Table for the Primary Mechanical Mode[1] . . . 145
Table 6-7 Uplink Reference Measurement Channel Table (Uplink Reference Measurement Channels are per Annexes A.2.2 and A.2.3 of 3GPP TS 36.521-1 with the Exceptions Noted in the Table for Band 13) . . . 147
Table 6-8 LTE Maximum TIS Level for Primary/secondary Antennas (in dBm) and Branch Power Difference (in dB) Requirements for the Primary Mechanical Mode[1] . . . 154
Table 6-9 CDMA 1xEV-DO Data Maximum TIS Level (in dBm) Requirements for the Primary Mechanical Mode[1] . . . 160
Table 6-10 CDMA 1xRTT Data 800 Maximum TIS Level (in dBm) Requirements for the Primary Mechanical Mode[1] . . . 165
Table 6-11 CDMA, CDMA 1xEV-DO DATA, CDMA 1xRTT Data Branch Power Difference (dB) Criteria Table for the Primary Mechanical Mode[1] . . . 168
Table 6-12 UMTS Branch Power Difference (dB) Criteria Table for the Primary Mechanical Mode[1] 170
Table 6-13 A-GPS with CDMA Maximum TIS/UHIS/PIGS Level (in dBm) Requirements for the Primary Mechanical Mode[1] . . . 174
Table 6-14 Channel Settings for GSM/UMTS for C/N_0 Measurements . . . 176
Table 6-15 A-GPS Test Parameters for GSM/UMTS . . . 177
Table 6-16 TX Power Settings and Test Channels of GSM/UMTS for A-GPS . . . 178
Table 6-17 A-GPS with GSM/UMTS Maximum TIS/UHIS/PIGS Level (in dBm) Requirements for the Primary Mechanical Mode[1] . . . 181
Table 6-18 Channel Settings for LTE for C/N_0 Measurements . . . 184
Table 6-19 A-GPS Test Parameters for LTE . . . 185
Table 6-20 A-GPS with LTE Maximum TIS/UHIS/PIGS Level (in dBm) Requirements for the Primary Mechanical Mode . . . 189
Table 7-1 Standard Uncertainty Conversion Factors . . . 200
Table 7-2 TRP Standard Uncertainties for the Contributions in the EUT Measurement Part . . 203
Table 7-3 Standard Uncertainties for the Contributions to the Reference Measurement 205
Table 7-4 TIS Standard Uncertainties for the Contributions in the EUT Measurement Part . . 207
Table 7-5 Standard Uncertainties for the Contributions to the Reference Measurement 209
Table 7-6 Additional Uncertainties Between Relative Measurement vs. Full TRP Measurement .

211
Table 7-7 Additional Uncertainties Between Relative Measurement vs. Full TIS Measurement . . 213
Table 7-8 Expanded Uncertainty Maximum Limits for Different Configurations for TRP and TIS . 215
Table B-1 Equipment Under Test (EUT) Information 244
Table B-2 EUTs Used for Each Test 244
Table B-3 Cellular OTA Summation Test Report 245
Table B-4 GPS Summation Test Report 245
Table B-5 Intermediate Channel Relative Sensitivity 247
Table B-6 GPS Intermediate Channel Relative Sensitivity 248
Table B-7 Summation Test Report Plot Matrix 249
Table B-8 GPS Summation Test Report Plot Matrix 250
Table B-9 CDMA 800 Minimum TRP Level Requirements for the Primary Mechanical Mode[1] 251
Table B-10 CDMA 1900 Minimum TRP Level Requirements for the Primary Mechanical Mode[1] . . 253
Table B-11 CDMA 2100/1700 Minimum TRP Level Requirements for the Primary Mechanical Mode[1] 255
Table B-12 CDMA 800 Maximum TIS Level Requirements for the Primary Mechanical Mode[1] 257
Table B-13 CDMA 1900 Maximum TIS Level Requirements for the Primary Mechanical Mode[1] . . 258
Table B-14 CDMA 2100/1700 Maximum TIS Level Requirements for the Primary Mechanical Mode[1] 259
Table B-15 CDMA 800 Maximum TIS And BPD Level Requirements for the Primary Mechanical Mode[1] 260
Table B-16 CDMA 1900 Maximum TIS And BPD Level Requirements for the Primary Mechanical Mode[1] 261
Table B-17 CDMA 2100/1700 Maximum TIS And BPD Level Requirements for the Primary Mechanical Mode[1] 262
Table B-18 CDMA 1xEV-DO DATA 800 Minimum TRP Level Requirements for the Primary Mechanical Mode[1] 263
Table B-19 CDMA 1xEV-DO DATA 1900 Minimum TRP Level Requirements for the Primary Mechanical Mode[1] 265
Table B-20 CDMA 1xEV-DO DATA 2100/1700 Minimum TRP Level Requirements for the Primary Mechanical Mode[1] 267
Table B-21 CDMA 1xEV-DO DATA 800 Maximum TIS Level Requirements for the Primary Mechanical Mode[1] 269
Table B-22 CDMA 1xEV-DO DATA 1900 Maximum TIS Level Requirements for the Primary Mechanical Mode[1] 270
Table B-23 CDMA 1xEV-DO DATA 2100/1700 Maximum TIS Level Requirements for the Primary Mechanical Mode[1] 271
Table B-24 CDMA 1xEV-DO 800 Maximum TIS and BPD Level Requirements for the Primary Mechanical Mode[1] 272
Table B-25 CDMA 1xEV-DO 1900 Maximum TIS and BPD Level Requirements for the Primary Mechanical Mode[1] 273
Table B-26 CDMA 1xEV-DO 2100/1700 Maximum TIS And BPD Level Requirements For The

Primary Mechanical Mode[1] 274
Table B-27 CDMA 1xRTT DATA 800 Minimum TRP Level Requirements for the Primary Mechanical Mode[1] 275
Table B-28 CDMA 1xRTT DATA 1900 Minimum TRP Level Requirements for the Primary Mechanical Mode[1] 277
Table B-29 CDMA 1xRTT DATA 2100/1700 Minimum TRP Level Requirements for the Primary Mechanical Mode[1] 279
Table B-30 CDMA 1xRTT DATA 800 Maximum TIS Level Requirements for the Primary Mechanical Mode[1] 281
Table B-31 CDMA 1xRTT DATA 1900 Maximum TIS Level Requirements for the Primary Mechanical Mode[1] 282
Table B-32 CDMA 1xRTT DATA 2100/1700 Maximum TIS Level Requirements for the Primary Mechanical Mode[1] 283
Table B-33 CDMA 1xRTT 800 Maximum TIS and BPD Level Requirements for the Primary Mechanical Mode[1] 284
Table B-34 CDMA 1xRTT 1900 Maximum TIS and BPD Level Requirements for the Primary Mechanical Mode[1] 285
Table B-35 CDMA 1xRTT 2100/1700 Maximum TIS and BPD Level Requirements for the Primary Mechanical Mode[1] 286
Table B-36 GSM 850 Minimum TRP Level Requirements for the Primary Mechanical Mode[1] . 287
Table B-37 GSM 1900 Minimum TRP Level Requirements for the Primary Mechanical Mode[1] 289
Table B-38 GSM 850 Maximum TIS Level Requirements for the Primary Mechanical Mode[1]. . 290
Table B-39 GSM 1900 Maximum TIS Level Requirements for the Primary Mechanical Mode[1]. 292
Table B-40 GPRS 850 Minimum TRP Level Requirements for the Primary Mechanical Mode[1 2] . . 293
Table B-41 GPRS 1900 Minimum TRP Level Requirements for the Primary Mechanical Mode[1 2] . 295
Table B-42 GPRS 850 Maximum TIS Level Requirements for the Primary Mechanical Mode[1]. 296
Table B-43 GPRS 1900 Maximum TIS Level Requirements for the Primary Mechanical Mode[1]298
Table B-44 EGPRS 850 Minimum TRP Level Requirements for the Primary Mechanical Mode[1 2] . 299
Table B-45 EGPRS 1900 Minimum TRP Level Requirements for the Primary Mechanical Mode[1 2] 300
Table B-46 EGPRS 850 Maximum TIS Level Requirements for the Primary Mechanical Mode[1] . . 301
Table B-47 EGPRS 1900 Maximum TIS Level Requirements for the Primary Mechanical Mode[1] . 302
Table B-48 UMTS 850 Minimum TRP Level Requirements for the Primary Mechanical Mode[1] 303
Table B-49 UMTS 1900 Minimum TRP Level Requirements for the Primary Mechanical Mode[1] . . 304
Table B-50 UMTS 2100/1700 Minimum TRP Level Requirements for the Primary Mechanical Mode[1]. 305
Table B-51 UMTS 850 Maximum TIS Level Requirements for the Primary Mechanical Mode[1]. 306
Table B-52 UMTS 1900 Maximum TIS Level Requirements for the Primary Mechanical Mode[1]307
Table B-53 UMTS 2100/1700 Maximum TIS Level Requirements for the Primary Mechanical Mode[1]. 308

Table B-54 UMTS 850 Maximum TIS And BPD Level Requirements for the Primary Mechanical Mode[1] . . . 309
Table B-55 UMTS 1900 Maximum TIS and BPD Level Requirements for the Primary Mechanical Mode[1] . . . 310
Table B-56 UMTS 2100/1700 Maximum TIS and BPD Level Requirements for the Primary Mechanical Mode[1] . . . 311
Table B-57 LTE Band 12 Minimum TRP Level Requirements for the Primary Mechanical Mode[1] . 312
Table B-58 LTE Band 17 Minimum TRP Level Requirements for the Primary Mechanical Mode[1] . 313
Table B-59 LTE Band 13 Minimum TRP Level Requirements for the Primary Mechanical Mode[1] . 314
Table B-60 LTE Band 14 Minimum TRP Level Requirements for the Primary Mechanical Mode[1] . 315
Table B-61 LTE Band 26 Minimum TRP Level Requirements for the Primary Mechanical Mode[1] . 316
Table B-62 LTE Band 5 Minimum TRP Level Requirements for the Primary Mechanical Mode[1]317
Table B-63 LTE Band 2 Minimum TRP Level Requirements for the Primary Mechanical Mode[1]318
Table B-64 LTE Band 25 Minimum TRP Level Requirements for the Primary Mechanical Mode[1] . 319
Table B-65 LTE Band 4 Minimum TRP Level Requirements for the Primary Mechanical Mode[1]320
Table B-66 LTE Band 41 Minimum TRP Level Requirements for the Primary Mechanical Mode[1] . 321
Table B-67 LTE Band 12 Maximum TIS Level Requirements for the Primary Mechanical Mode[1] . . 322
Table B-68 LTE Band 17 Maximum TIS Level Requirements for the Primary Mechanical Mode[1] . . 323
Table B-69 LTE Band 13 Maximum TIS Level Requirements for the Primary Mechanical Mode[1] . . 324
Table B-70 LTE Band 14 Maximum TIS Level Requirements for the Primary Mechanical Mode[1] . . 325
Table B-71 LTE Band 26 Maximum TIS Level Requirements for the Primary Mechanical Mode[1] . . 325
Table B-72 LTE Band 5 Maximum TIS Level Requirements for the Primary Mechanical Mode[1] 327
Table B-73 LTE Band 2 Maximum TIS Level Requirements for the Primary Mechanical Mode[1] 328
Table B-74 LTE Band 25 Maximum TIS Level Requirements for the Primary Mechanical Mode[1] . . 329
Table B-75 LTE Band 4 Maximum TIS Level Requirements for the Primary Mechanical Mode[1] 330
Table B-76 LTE Band 41 Maximum TIS Level Requirements for the Primary Mechanical Mode[1] . . 331
Table B-77 LTE Band 12 Maximum TIS and BPD Level Requirements for the Primary Mechanical Mode[1] . . . 332
Table B-78 LTE Band 17 Maximum TIS and BPD Level Requirements for the Primary Mechanical Mode[1] . . . 333
Table B-79 LTE Band 13 Maximum TIS and BPD Level Requirements for the Primary Mechanical Mode[1] . . . 334
Table B-80 LTE Band 14 Maximum TIS and BPD Level Requirements for the Primary Mechanical

Mode[1] . . . 335
Table B-81 LTE Band 26 Maximum TIS and BPD Level Requirements for the Primary Mechanical Mode[1] . . . 336
Table B-82 LTE Band 5 Maximum TIS and BPD Level Requirements for the Primary Mechanical Mode[1] . . . 338
Table B-83 LTE Band 2 Maximum TIS and BPD Level Requirements for the Primary Mechanical Mode[1] . . . 340
Table B-84 LTE Band 25 Maximum TIS and BPD Level Requirements for the Primary Mechanical Mode[1] . . . 342
Table B-85 LTE Band 4 Maximum TIS and BPD Level Requirements for the Primary Mechanical Mode[1] . . . 344
Table B-86 LTE Band 41 Maximum TIS and BPD Level Requirements for the Primary Mechanical Mode[1] . . . 346
Table B-87 A-GPS with CDMA Maximum TIS/UHIS/PIGS Level Requirements for the Primary Mechanical Mode[1] . . . 348
Table B-88 A-GPS with GSM/UMTS Maximum TIS/UHIS/PIGS Level Requirements for the Primary Mechanical Mode[1] . . . 349
Table B-89 A-GPS with LTE Maximum TIS/UHIS/PIGS Level Requirements for the Primary Mechanical Mode[1] . . . 350
Table B-90 Example EUT Measurement Part Data File Formats for Transmit Tests (Top) and Receive Tests (Bottom) . . . 353
Table C-1 Dielectric Properties of the Tissue-equivalent Liquid . . . 366
Table C-2 Hand Phantom Dimensions . . . 369
Table C-3 Hand Dielectric Parameters . . . 374
Table C-4 Range of Monoblock-like Device Sizes Suitable for use with Monoblock Hand Phantom . . . 377
Table C-5 Range of Fold Device Sizes Suitable for use with Fold Hand Phantom . . . 378
Table C-6 Range of Narrow Data Device Sizes Suitable for use with Narrow Data Hand Phantom 379
Table C-7 Range of PDA Device Sizes Suitable for use with PDA Hand Phantom . . . 380
Table D-1 Broadband Power Mode Measurement Requirements . . . 410
Table G-1 Contributions for Inadequate Measurement Distance . . . 439
Table G-2 Standard Uncertainties for the Head, Hand and EUT Positioning in the Hand and Against the Head . . . 447
Table G-3 Example of Uncertainty Template for Dielectric Constant (ε_r') or Conductivity (σ) Measurement at a Specific Frequency Band[1] . . . 462
Table G-4 Example Of Uncertainty Assessment For Reasonably Worst-case Head, Hand and EUT Positioning in the Hand and Against the Head . . . 464
Table G-5 Example of Uncertainty Assessment for Hand Phantom, Fixture and Phone Positioning in Data Mode Testing . . . 467
Table G-6 Additional Measurement Uncertainties for Large Form Factor Devices . . . 472
Table K-1 CDMA 800 Intermediate Channel List . . . 497
Table K-2 CDMA 1900 Intermediate Channel List . . . 499
Table K-3 CDMA AWS-1 Band (3GPP2 Band Class 15) Intermediate Frequencies . . . 502
Table K-4 UMTS Band V Intermediate Frequencies . . . 505
Table K-5 UMTS Band II Intermediate Frequencies . . . 505

Table K-6 UMTS Band IV Intermediate Frequencies 506
Table K-7 LTE Intermediate Channel Measurements Table 507
Table M-1 GSM Frequency Bands 519
Table M-2 GSM Channels 519
Table M-3 UMTS Frequency Bands 519
Table M-4 UMTS Channels 520
Table M-5 LTE Frequency Bands 520
Table M-6 LTE TRP Channels and RB Allocations 520
Table M-7 LTE TIS Channels and RB Allocations 521
Table O-1 Airlink Technology Test Requirements 528
Table O-2 LTE Relative Sensitivity on Intermediate Channels 530
Table Q-1 List of Cited References 544

Section 1 Introduction

1.1 Purpose

The purpose of this test plan is to define the CTIA Certification program test requirements for performing Radiated RF Power and Receiver Performance measurements on wireless devices.

1.2 Scope

This test plan defines general requirements for equipment configurations, laboratory techniques, test methodologies, and evaluation criteria that must be met in order to ensure the accurate, repeatable, and uniform testing of wireless devices to ensure that they meet CTIA Certification standards. This test plan also defines a portion of the requirements that a laboratory must satisfy to qualify for and maintain CTIA Authorized Testing Laboratory (CATL) status (contact the CTIA Certification Program staff for complete CATL requirements).

This test plan does not provide specific test equipment configurations or detailed test instructions by which to execute certification testing. Such documentation and procedures must be presented by the CATL as part of the CTIA authorization process and subsequently maintained and employed by the CATL to remain authorized to perform Certification testing.

1.3 Applicable Documents

The following documents are referenced in this Test Plan:

Beard, B.B, et al., "*Comparisons of Computed Mobile Phone Induced SAR in the SAM Phantom to That in Anatomically Correct Models of the Human Head*", IEEE Transactions On Electromagnetic Compatibility, Vol. 48, No. 2, p. 397 - 407, May 2006.

EN 50361:2001 *Basic Standard for the measurement of Specific Absorption rate related to human exposure to electromagnetic fields from mobile phones* (300 MHz - 3 GHz).

ETSI TR 100 028 Parts 1 & 2: *Electromagnetic compatibility and Radio spectrum Matters (ERM); Uncertainties in the measurement of mobile radio equipment characteristics.* ETSI, 2001.

ETSI TR 102 273 V1.2.1: *Electromagnetic compatibility and Radio spectrum Matters (ERM); Improvement of radiated methods of measurement (using test sites) and evaluation of the corresponding measurement uncertainties.* ETSI, 2001.

Gregory, A.P., and Clarke, R.N., "*Dielectric Metrology with Coaxial Sensors*", Meas. Sci. Technol. 18 (2007), 1372 -1386.

Guide to the Expression of Uncertainty in Measurement, International Organization for Standardization, Geneva, Switzerland, 1995.

Hand Anthropometry of US Army Personal, Thomas M. Greiner, Army Natick Research Development and Engineering Center, Technical Report Natick/TR-92/011, Dec. 1991.

IEEE P1528.1™/D1.0 Draft *Recommended Practice for Determining the Peak Spatial-Average Specific Absorption Rate (SAR) in the Human Body from Wireless Communications Devices, 30 MHz - 6 GHz: General Requirements for using the Finite Difference Time Domain (FDTD) Method for SAR Calculations.*

IEEE P1528.3™/D2.0 Draft *Recommended Practice for Determining the Peak Spatial-Average Specific Absorption Rate (SAR) in the Human Body from Wireless Communications Devices, 30 MHz - 6 GHz: General Requirements for using the Finite Difference Time Domain (FDTD) Modeling of Mobile Phones/Personal Wireless Devices.*

IEEE P1528.4™/D1.0 Draft *Recommended Practice for Determining the Peak Spatial Average Specific Absorption Rate (SAR) in the Human Body from Wireless Communications Devices, 30 MHz - 6 GHz: Requirements for Using the Finite-Element Method for SAR Calculations*, specifically involving Vehicle-Mounted Antennas and Personal Wireless Devices.

IEEE Recommended Practice for Determining the Peak Spatial-Average Specific Absorption Rate (SAR) in the Human Head from Wireless Communications Devices: Measurement Technique, IEEE, Inc., December 19, 2003.

IEEE, 1528™ SCC34 Draft Standard: *Recommended Practice for Determining the Peak Spatial-Average Specific Absorption Rate (SAR) in the Human Body Due to Wireless Communications Devices: Experimental Techniques*, April 2002.

ISO/IEC 17025:2005, *General requirements for the competence of testing and calibration laboratories,* International Organization for Standardization

Li C-H., Ofli E., Chavannes N., and Kuster N., "T*he Effects of Hand Phantom on Mobile Phone Antenna OTA Performance", Proc. Second European Conference on Antennas and Propagation*, EuCAP 2007, Edinburgh, UK, November 11 - 16, 2007.

NIS 81, "*The Treatment of Uncertainty in EMC Measurements*," Ed. 1, NAMAS Executive, National Physical Laboratory, Teddington, Middlesex, TW11 0LW, England, 1994.

NIST, "*Guidelines for evaluating and expressing the uncertainty of NIST measurement results*", Technical Note 1297 (TN 1297), United States Department of Commerce Technology Administration, National Institute of Standards and Technology, Gaithersburg, MD, 1994.

Ofli E., Chavannes N., and Kuster N., "*The Uncertainties and Repeatability Limitations of Transmitter and Receiver Performance Assessments Posed by Head Phantoms*", Proc. IEEE International Workshop on Antenna Technology (IWAT06), pp. 349-352, New York, 2006.

OMA-AD-SUPL-V2_0-20110527-C, Candidate Version 2.0 (27 May 2011): *Secure User Plane Location Architecture*, Open Mobile Alliance

Recommended Minimum Performance Specification for TIA/EIA/IS-801-1 Spread Spectrum Mobile Station, TIA-916, April 2002, Telecommunications Industry Association.

Recommended Minimum Performance Standards for cdma2000® High Rate Packet Data Access Terminal, TIA-866-A, January 2006, Telecommunications Industry Association

Recommended Minimum Performance Standards for cdma2000® High Rate Packet Data Access Terminal - Addendum 1, TIA-866-1[E], January 2004, Telecommunications Industry Association.

Recommended Minimum Performance Standards for cdma2000 Spread Spectrum Mobiles Stations, TIA-98-E, June 2001, Telecommunications Industry Association.

Surface Anatomy of the Hand: The Relationships Between Palmar Skin Creases and Osseous Anatomy, William D. Bugbee, M.D. and Michael J. Botte, M.D., Clinical Orthopaedics and Related Research; Vol. 296, 1993, pp. 122 - 126.

The Measure of Man and Woman: Human Factors in Design, Alvin R. Tilley and Henry Dreyfuss Associates; Wiley, Dec. 31, 2001.

Tissue Equivalent Material for Hand Head phantoms, Gabriel C., Physics in Medicine and Biology, Vol. 52 (2007), pp. 4205 - 4210.

TS 05.05 V8.11.0 (2001-08): *Technical Specification Group GSM/EDGE Radio Access Network; Radio transmission and reception,* 3GPP.

TS 25.101 V7.4.0 (2006-06): *Technical Specification Group, Radio Access Network; User Equipment (UE) radio transmission and reception (FDD) (Release 7),* 3GPP.

TS 25.331, V3.11.0 (2002-6): *Technical Specification Group Radio Access Network; Radio Resource Control (RRC)*; *Protocol Specification,* 3GPP.

TS 34.108, V6.4.0 (2006-10): *Common test environments for User Equipment (UE); Conformance testing (Release 6),* 3GPP.

TS 34.109, V7.0.0 (2006-09): *Terminal logical test interface; Special conformance testing functions (Release 7)*, 3GPP.

TS 34.121, V6.4.0 (2006-03): *Terminal conformance specification; Radio transmission and reception (FDD) (Release 6)*, 3GPP.

TS 34.121-1, V7.2.0 (2006-10): *Radio transmission and reception (FDD); Part 1: Conformance specification (Release 7)*, 3GPP.

TS 34.171 V7.1.0 (2004-08): *Technical Specification Group Radio Access Network; Terminal conformance specification; Assisted Global Positioning System (A-GPS); Frequency Division Duplex (FDD)*, 3GPP.

TS 36.101, v8.19.0 (2012-09): *Technical Specification Group Radio Access Network; Evolved Universal Terrestrial Radio Access (E-UTRA); User Equipment (UE) radio transmission and reception,* 3GPP

TS 36.133, v8.19.0 (2012-09): *Technical Specification Group Radio Access Network; Evolved Universal Terrestrial Radio Access (E-UTRA); Requirements for support of radio resource management*, 3GPP

TS 36.211, v8.9.0 (2009-12): *Technical Specification Group Radio Access Network; Evolved Universal Terrestrial Radio Access (E-UTRA); Physical Channels and Modulation*, 3GPP

TS 36.214, v8.7.0 (2009-09): *Technical Specification Group Radio Access Network; Evolved Universal Terrestrial Radio Access (E-UTRA); Physical layer – Measurements*, 3GPP

TS 36.355, v9.8.0 (2011-12): *Technical Specification Group Radio Access Network; Evolved Universal Terrestrial Radio Access (E-UTRA); LTE Positioning Protocol (LPP)*, 3GPP

TS 36.508, v10.2.0 (2012-09): *Technical Specification Group Radio Access Network; Evolved Universal Terrestrial Radio Access (E-UTRA) and Evolved Packet Core (EPC); Common test environments for User Equipment (UE) conformance testing*, 3GPP

TS 36.521-1, v10.3.0 (2012-09): *Technical Specification Group Radio Access Network; Evolved Universal Terrestrial Radio Access (E-UTRA); User Equipment (UE) conformance specification Radio transmission and reception; Part 1: Conformance Testing,* 3GPP

TS 37.571-1, v10.1.0 (2012-09): *Technical Specification Group Radio Access Network; Universal Terrestrial Radio Access (UTRA) and Evolved UTRA (E-UTRA) and Evolved Packet Core (EPC); User Equipment (UE) conformance specification for UE positioning; Part 1: Conformance test specification,* 3GPP

TS 37.571-5, v10.1.0 (2012-09): *Technical Specification Group Radio Access Network; Universal Terrestrial Radio Access (UTRA) and Evolved UTRA (E-UTRA) and Evolved Packet Core (EPC); User Equipment (UE) conformance specification for UE positioning; Part 5: Test scenarios and assistance data*, 3GPP

TS 44.031, V8.2.0 (2009) *Location Services (LCS); Mobile Station (MS) - Serving Mobile Location Centre (SMLC) Radio Resource LCS Protocol (RRLP)*, 3GPP.

TS 45.005, v7.25.0 (2011-05): *Technical Specification Group GSM/EDGE Radio Access Network; Radio transmission and reception,* 3GPP

TS 51.010 V4.9.0 (2002-07): *Mobile Station (MS) Conformance Specification*, 3GPP.

TS 51-010-1 V7.2.0 (2006-07): *Technical Specification Group, GSM/EDGE Radio Access Network, Digital cellular telecommunications system (Phase 2+); Mobile Station (MS) conformance specification*, 3GPP.

1.4 Test Overview

This test plan presents the individual test procedures organized by type of test (Transmitter, Receiver) and/or technology (CDMA, GSM, etc.).

The testing requirements fall into 3 categories:

1. Measuring the basic performance of the test chamber,
2. Measuring the path loss of the test system, and
3. Measuring the performance of the wireless device.

The basic performance of the test chamber is covered in Section 3, and includes a site validation method used to determine the uncertainty contribution of the test system. Corrections for the path loss of the test system, including range length, measurement antenna,

cables, amplifiers, etc. are determined using the range reference measurement described in Section 4. This measurement uses a calibrated reference antenna to determine a relative correction value that can then be applied to measurement instrument readings in order to determine the performance of the wireless device relative to a theoretical isotropic radiator or receiver. The measurement of the wireless device is covered in Section 5 for radiated power measurements and Section 6 for sensitivity measurements. On completion of the three measurement categories, the results are processed as described in Appendix B. The overall measurement uncertainty is calculated in the manner described in Section 7 (using Appendix G as a guide).

The test report requirements are defined in Appendix B.

1.5 Equipment Under Test (EUT) and Accessories—The Wireless Device

At the manufacturer's discretion, one or multiple samples representing typical production units may be submitted to a CATL for radiated performance testing. All samples must be provided to a single CATL responsible for OTA testing of the device, known as the “primary” CATL. The primary CATL may distribute the device sample(s) to labs acting as a subcontractor to the primary CATL.

The primary CATL and its subcontractors shall ensure that all of the requirements listed below are met:

- All sample devices must be capable of supporting all applicable radiated performance test cases.
- If RF connectors for conducted testing of cellular are available without altering the radiated performance on the sample devices, the reference sensitivity of each receiver and maximum output power of the transmitter shall be measured and documented for each sample on each of the test frequencies, bands and cellular radio modes utilized during radiated testing.
- If RF connectors for conducted testing of cellular + GPS are available without altering the radiated performance of the sample devices, then for each cellular radio mode and band that is tested for GPS radiated performance, conducted GPS testing shall be performed on the same sample.
- When multiple samples are provided, the EUT shall be randomly selected from among the submitted samples such that a single EUT will be employed for tests within a:
  - Cellular Radio Mode
  - Band
  - Test Type (e.g., AGPS, TRP, or TIS)
  - Test Condition (e.g., FS, BHHL or BHHR)

  Example: If a manufacture provides four sample devices to the CATL (Device A, B , C and D) and the lab randomly selects Device C for execution of BHHR

testing for TIS in UMTS Band II, then all radiated performance tests associated with this test condition, test type, band and cellular radio mode must be executed with Device C only. In this example, BHHL testing for TIS in UMTS Band II could be executed with a different randomly-selected sample device. BHHR testing for TIS in UMTS Band V could be executed using yet another randomly-selected sample device, etc.

- The test report must unambiguously state which sample and test system was used for each test condition in order to comply with the traceability requirements of ISO/IEC 17025:2005.
- One or more authorized test systems may be utilized.

Units for test are to be supplied with all required peripherals and accessories, including the standard battery and charger as supplied with the unit. If an RF port is available on the EUT, a calibrated RF adapter cable terminating in a common SMA or "type N" connector shall be supplied for conducted power measurements. The associated RF insertion loss for that cable connection shall be included. If a specially designed grip is needed for the EUT, a custom hand phantom shall be supplied.

1.6 Wireless Device Documentation

All documentation and accessories associated with the installation and operation of the EUT shall be supplied. This includes, at a minimum:

- User guides or manuals
- Programming instructions
- Installation guides or manuals
- Service manuals, including manual control of EUT from Test Interface Unit and/or keypad
- All Base Station Simulator settings required to register the EUT and establish a call
- Manufacturer declaration of primary mechanical mode[1] of operation, i.e., portrait slide open, fold open, or other mechanical configuration (required for CDMA, CDMA 1xEV-DO, CDMA 1xRTT EUT's)

In addition to the documentation, the manufacturer shall provide contact information including telephone number and e-mail address of an individual responsible for providing technical and operational assistance.

1. Primary Mechanical Mode refers to device configured in preferred mode per manufacturer instructions (typically means antenna extended, fold or portrait slide open, but depends on form factor)

Section 2 Scope of Measurements

Good radiated performance is critical to the effective operation of a wireless device in today's networks. As devices become smaller, radiated performance can often become compromised. For example, achieving an efficient antenna in a small size and over multiple frequency bands is a difficult task. A comprehensive and accurate characterization of radiated performance will enable carriers and manufacturers to determine how well wireless devices will work within the constraints of a specific cellular network design.

Generally, peak EIRP (Effective Isotropic Radiated Power) is not a good indication of wireless performance in the field. For example, if the radiation pattern of the EUT's antenna system is highly directive, the peak EIRP would be high (since the antenna gain is high in one direction), but coverage would be poor in other directions. In a cellular environment it is best to maximize the spatial coverage of the antenna system so that the user does not have to point the antenna in one particular direction to get good call performance. Further, the human head and/or hand can alter the shape and peak value of the EUT radiation pattern. Losses due to the head and/or hand can vary significantly with frequency, device size, and antenna design implemented. From a field performance perspective, measurement of the average EIRP on a head and/or hand model is more meaningful than measurement of peak EIRP in free-space conditions. This test plan requires average spherical effective isotropic radiated power (termed Total Radiated Power, TRP) to be measured.

Receiver performance, or EIS (Effective Isotropic Sensitivity) is as important to the overall system performance as transmitter performance. The downlink receive path is integral to the quality of the device's operation. Poor receiver radiated performance will cause the user of the subscriber unit to hear a low quality voice signal. This can also cause the subscriber unit to lose the base station signal resulting in abrupt termination of the call. This test plan requires average spherical effective radiated receiver sensitivity (termed Total Isotropic Sensitivity, TIS) to be measured. A frequent cause of poor sensitivity on a single channel, or a small number of channels, is due to receiver in-band noise, or spurious signals from the transmitter itself being radiated back into the receiver. The receiver sensitivity will be measured with the transmitter set to the maximum power output allowed by the particular EUT and technology combination.

The procedures defined herein will a) evaluate the inherent performance of the test chamber used for the measurements; b) detail the measurements of the transmitter performance (as TRP) and receiver performance (as TIS) for the wireless device (measuring wireless performance in free-space and/or with phantoms where appropriate); c) detail the method for calculation of the associated measurement uncertainty.

2.1 Equipment Under Test (EUT) Measurements—Transmitter

The radiated RF performance of the Equipment Under Test (EUT) is measured by sampling the radiated transmit power of the mobile at various locations surrounding the device. A three-dimensional characterization of the 'transmit' performance of the EUT is pieced together by analyzing the data from the spatially distributed measurements. Data points taken every 15 degrees in the Theta (θ) and in the Phi (ϕ) -axes are deemed sufficient to fully characterize the EUT's Far-Field radiation pattern and total radiated power. This accounts for a total of 264 measurements for each of two orthogonal polarizations since measurements at Theta = 0 and 180 degrees are not required. All of the measured power values will be integrated to give a single figure of merit referred to as Total Radiated Power (TRP).

2.2 Equipment Under Test (EUT) Measurements—Receiver

The receiver performance of the Equipment Under Test (EUT) is measured utilizing Bit Error Rate (BER), Frame Error Rate (FER), or other error criteria. This test specification uses the appropriate error criteria to evaluate effective radiated receiver sensitivity at each spatial measurement location. A three-dimensional characterization of the receiver performance of the EUT is pieced together by analyzing the data from the spatially distributed measurements. Data points taken every 30 degrees in the Theta (θ) and in the Phi (ϕ) -axes are deemed sufficient to fully characterize the EUT's total isotropic sensitivity. This accounts for a total of 60 measurements for each of two orthogonal polarizations since measurements at Theta = 0 and 180 degrees are not required. All of the measured sensitivity values for each EUT test condition will be integrated to give a single figure of merit referred to as Total Isotropic Sensitivity (TIS).

Some digital technologies and/or EUTs may not allow the measurement of error criteria without special procedures for controlling the EUT. In this case, external cables and manual test commands may be applied to the EUT for setup purposes only. All such cables must be removed and the EUT operated in stand-alone battery powered mode during the data collection process.

2.3 Equipment Under Test (EUT) Measurements—General

Two acceptable methods of scanning the EUT are proposed. (1) The “conical” cut method, whereby the EUT rotates on its long axis and the Measurement Antenna is moved (either mechanically in the case of systems using a single Measurement Antenna or electrically for those systems using multiple measurement antennas) to several locations both above and below the level of the EUT for each rotation. (2) The “great circle” cut method, whereby the Measurement Antenna remains fixed and the EUT is rotated about two axes in sequential order. Section 2.4 describes the Conical Cut Test Method; Section 2.5 describes the Great

Circle Cut Method. The test configurations detailed in Appendix A are suggested testing methods; alternative positioning methods that yield data samples at the specified angular locations with similar polarization properties are acceptable. Alternately, data point reduction methods that reduce the measured data points near Theta = 0° and Theta = 180° while maintaining the effective surface resolution required for a given test may be used, although additional uncertainty contributions may be required.

In both Conical Cut and Great Circle Cut methods, the angle of elevation in the long axis of the EUT is referred to as the Theta angle, and the azimuth angle of the EUT is referred to as the Phi angle. The axis of turntable rotation will measure along the Theta axis for the Great Circle Cut method, and along the Phi axis for the Conical Cut method. Although the data is gathered in a different order, the resultant data from both methods is measured at the same (θ, ϕ) points and is processed in the same manner. The Measurement Antenna should be capable of measuring in two orthogonal linear polarizations, E-Phi and E-Theta. These two polarizations may be measured during a single EUT rotation or during subsequent rotations.

The overall measurement of the EUT makes use of the data obtained from Section 4 to normalize the measured performance of the EUT performed over a spherical surface with the EUT's antenna centered in the sphere. A Base Station Simulator is used to set up calls to the EUT and to request reports of signal strength that the EUT is measuring on the 'receive' frequency of the call. These two measurements may be taken individually or together as part of a single set of sampling scans. Data is collected and stored during the measurement step for delivery with the test report for each device tested.

Depending on the type of device being tested, measurements will be made in the following configurations:

1. A “free-space” configuration, whereby the EUT will be placed directly on a support made of low dielectric material
2. A “head and hand phantom” configuration, whereby the EUT will be placed in a hand phantom, against a head phantom,
3. A “hand phantom only” configuration, whereby the EUT will be placed in a hand phantom.

Coordinate systems and positioning requirements for all configurations are described in Appendix A. The requirements for the head and hand phantoms are defined in Appendix C.

Measurements will be performed with the antenna of the EUT extended and retracted (if applicable) in the test configurations.

Different measurement results may be obtained between positioning the EUT on the left or right ear of the head phantom. As a result, this Test Plan requires the measurement of performance against both ears for the head and hand phantom tests. In the interest of managing the overall test time, head phantom only tests are no longer required.

Measurement variability may also be attributed to the level of fluid in the head phantom; especially when the head phantom is positioned horizontally (Great Circle Cut). To minimize measurement uncertainties, air bubbles in the head phantom should be eliminated by completely filling the head phantom with fluid. Special care should be taken when performing Great Circle Cut measurements on the head phantom to ensure the center of rotation is about the volume center of the EUT for free space measurements, about the Ear Reference Point (see Appendix C.2) for head phantom testing and head and hand phantom testing, and about the EUT's display center for hand phantom testing.

Tests shall be performed on all possible EUT configurations (i.e., battery pack configurations, housing schemes) unless it is demonstrated that there is negligible impact to performance with the different options. It is the responsibility of the manufacturer to define which options represent the "baseline" configuration and to provide adequate supporting data that validates assumptions for reduced testing of the remaining options. At a minimum, a complete set of measurements is required for the baseline EUT configuration.

2.4 Conical Cut Test Method

Figure A-22 in Appendix A shows a diagram of the Conical Cut measurement method. The Conical Cut method requires the ability of the Measurement Antenna to be physically rotated in the Theta plane (overhead) of the EUT for implementations using a single Measurement Antenna. For systems using multiple measurement antennas, the rotation in the Theta plane is achieved by electrical selection of the different antennas. Eleven conical cuts are required to capture data at every 15 degrees from the EUT, whereas only five are required to capture data at 30-degree intervals; with the top (0 degrees) and bottom (180 degrees) cuts not being measured. Typically, the EUT will remain affixed to a turntable during the entire measurement process. The Measurement Antenna will be positioned at a starting Theta angle. The EUT will then be rotated around the full 360 degrees of Phi rotation. The Measurement Antenna will then be positioned at the next Theta angle, and the process repeated.

Measurements of the radiated transmit power and receiver sensitivity should be recorded in both E-Theta and E-Phi polarizations simultaneously to reduce measurement uncertainties due to EUT repositioning. The EUT will report the power it measures in the receive-band by sending a message to the Base Station Simulator (for technologies that support this function).

2.5 Great Circle Test Method

The ear centered head phantom configuration shown in Appendix A is used in Figure 2-1 to illustrate the pattern cuts that are taken with a Great Circle Cut system. The coordinate system shall be oriented such that the Z-axis for a given configuration is along the horizontal axis. The pattern cuts are Theta rotation cuts. The vertical discs illustrate the 30 degree points on the rotation lines (which are orthogonal to the discs). A measurement is carried out at every intersection of these vertical discs and the rotation lines (except at the poles where Theta = 0

and 180 degrees). Note that the illustration is for the 30 degree grid points involved in the TIS measurement only. For the TRP tests, the grid of measurement points is much more dense since the grid points are spaced by 15 degrees.

Figure 2-1 shows a cluster of measurement points towards the poles. It is due to this clustering that the measurement data has to be 'weighted' by sin (Theta) so that the requirement for uniform density of measurement points around the sphere is achieved. As a consequence, it is pointless measuring at Theta angles of 0 and 180 degrees since these calculate out to zero.

With the Z-axis of the coordinate system horizontal and rolling in the elevation plane, the Great Circle Cut test method will measure exactly the same (Theta, Phi) points as those measured by Conical Cut systems.

For TIS tests, 6 Great Circle Cuts need to be made to completely measure the 3D sphere. These are referred to as T0, T30, T60, T90, T120, and T150 where T0 is the initial cut and is defined as the cut for which the horizontal head has the test ear closest to the ground.
Figure 2-2 illustrates the T0 cut. For TRP tests, T0 should be the same cut, but given that the grid is 15 degrees; the series of cuts becomes T0, T15, T30, T45, T60, T75, T90, T105, T120, T135, T150 and T165. The composite of these Theta cuts provides a three-dimensional view of the antenna pattern and performance.

The T0 cut as shown in Figure 2-2 has been deliberately chosen so that the measurement will not include the cut with the test ear uppermost, since this cut could potentially give corrupted results should an air bubble have formed within the head. None of the cuts T0 to T150 or T165 will be influenced by the presence of an air bubble, provided a regular maintenance procedure for checking (and refilling if necessary) the head phantom is in place and a hard limit on the size of the air bubble is imposed. It is suggested that weekly checks should be made on the state of the liquid and that any air bubble that has collected should not be allowed to exceed 25 mm in diameter when measured against a flat plate. Tests performed with bubbles as large as 100 mm in diameter indicate that several tenths of a dB error can be expected due to the bubble when near the phone. The magnitude of the effects in these tests indicates that a suitably small bubble near the phone will have a negligible effect on the measured results. For the purposes of this test plan, a bubble size less than 13 mm in diameter can be assumed to have a negligible effect, even when near the phone. As long as this requirement is met, both the great circle or conical cut methodology may be used on a head phantom with orientations other than vertical.

Wherever possible, measurements of the radiated transmit power and receiver sensitivity should be recorded in both E-Theta and E-Phi polarizations simultaneously to reduce measurement uncertainties due to EUT repositioning. The EUT will report the error criteria or the measurements needed to calculate the error criteria that it measures in the receive-band by sending a message to the Base Station Simulator (for technologies that support this function).

Figure 2-1 illustrates the measurement configuration for the Great Circle cut method.

FIGURE 2-1 GREAT CIRCLE CUTS AND MEASUREMENT POINTS (FOR 30 DEGREE GRID)

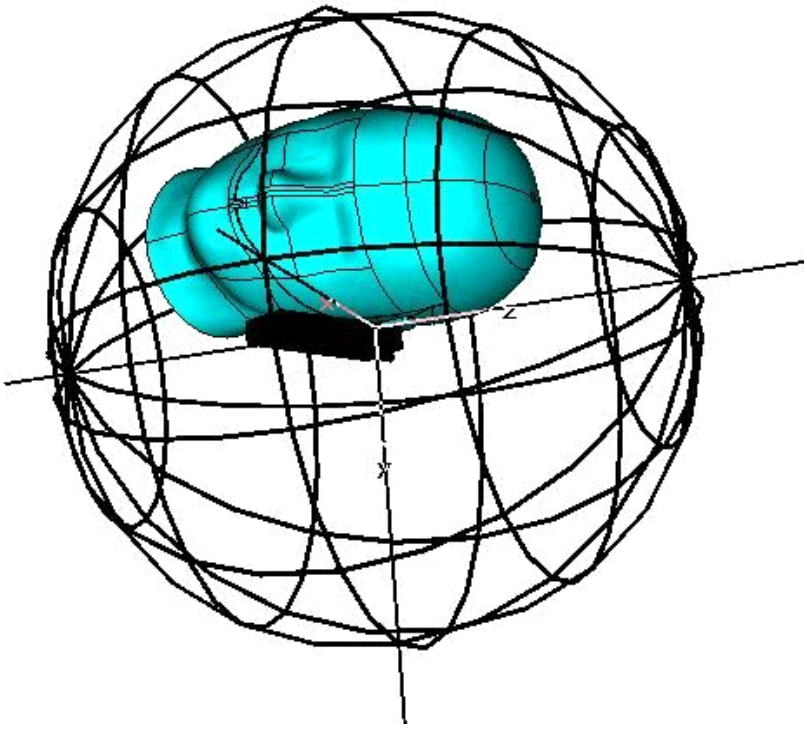

FIGURE 2-2 THE GREAT CIRCLE T0 CUT

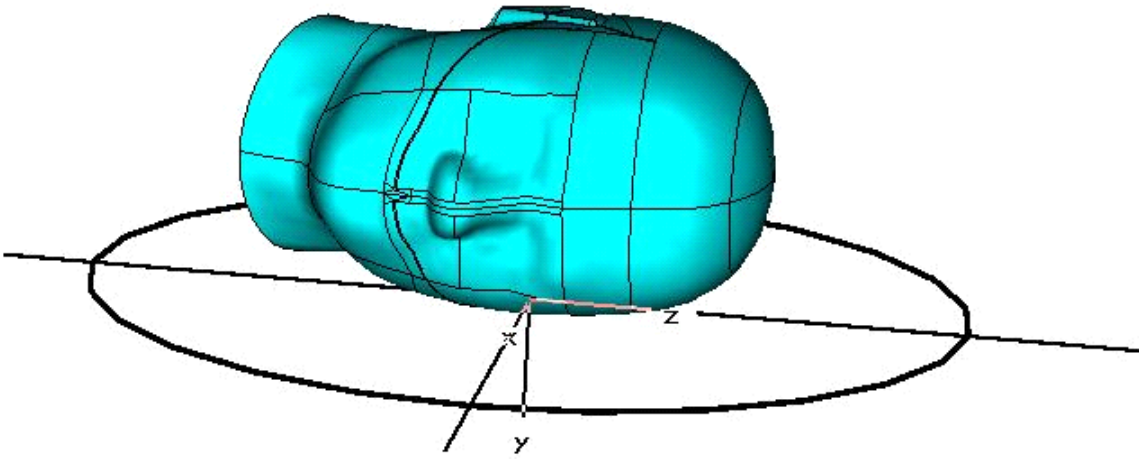

2.6 Theta Dependent Phi Step Size Optimization

An optional data point reduction optimization can be used for measurements performed using a conical cut acquisition process in order to improve test time by as much as 25-35%. In this case, the ϕ angle step size can be varied as a function of the θ position according to the formula:

$$N_{\phi}(\theta) = 1 + \text{int}((N_{\phi}(90°) - 1)\sin(\theta))$$

where $N_{\phi}(\theta)$ is the minimum number of points at any given θ position, $N_{\phi}(90°)$ is defined as 360° divided by the chosen ϕ angle step size, and int() refers to taking the integer portion of the result within the parentheses. The ϕ angle step size for this θ angle is then given by $360°/N_{\phi}(\theta)$. The target positions may be rounded to the nearest whole degree if desired. It is also allowable to increase the number of steps for any given θ angle over the minimum defined above in order to align the angular ϕ positions to even positions for one or more ϕ cut(s), allowing the optimization to be used for great circle cuts as well.

Section 3 Test Site Characteristics and Quiet Zone Accuracy

This section describes the required procedure for ensuring sufficient quiet zone performance of the test site. This procedure is required to characterize variations in field measurements caused by reflections within an anechoic chamber. This test is designed to characterize the entire test system, including any positioners and support structure.

The test procedure measures the azimuth plane pattern cuts of highly symmetrical dipoles and loops for a number of positions and orientations within the desired quiet zone. The deviation of these pattern cuts from a perfect circle (the ripple) is then used to determine the resulting measurement uncertainty through a statistical analysis. Since the symmetry of the probe antennas is critical, a procedure for verifying its symmetry is also provided.

3.1 Minimum Measurement Distance

This section describes the minimum measurement distance, *R*, which the Far-Field test site shall provide. The measurement distance is defined as the distance from the center of rotation of the EUT to the phase center (alternatively, if not accurately known, the nearest point) of the Measurement Antenna. The minimum measurement distance is specified in Table 3-1, below.

TABLE 3-1 MINIMUM MEASUREMENT DISTANCE FOR HANDHELD EUTS

Band	Lower Frequency (MHz)	Upper Frequency (MHz)	Minimum Measurement Distance *R* (meters)
3GPP Band 12	699	746	1.29
3GPP Band 17	704	746	1.28
3GPP Band 13	746	787	1.21
3GPP Band 14	758	798	1.19
3GPP Band 26	814	894	1.11
Cellular (3GPP Band 5)	824	894	1.09
GPS	1574.4	1576.44	0.95
AWS-1 TX (3GPP Band 4 TX)	1710	1755	1.05
PCS (3GPP Band 2)	1850	1990	1.19
3GPP Band 25	1850	1995	1.20
AWS-1 RX (3GPP Band 4 RX)	2110	2155	1.29
3GPP Band 41	2496	2690	1.61

A test site shall provide at least the specified minimum measurement distance for all tests and validation procedures described in this test plan. Alternatively, a minimum measurement distance of 1.2 m may be used, provided the appropriate uncertainty term is included in the uncertainty budget for the test case. This uncertainty term may be taken from Table G-6. Note that this uncertainty term is in addition to the uncertainty term in Table G-1. This uncertainty term from Table G-6 shall only be applied once for small (< 30 cm) or large (< 42 cm) form factor devices. It is understood that the uncertainty terms in Table G-6 are based on the large form factor, and as such, represent the worst case uncertainty expected.

These distances derived in the table above are the minimum recommended to facilitate measurement in the Far-Field for the purposes of this test plan. They are based on selecting the strictest of the three conventional Far-Field criteria within each band. These criteria express that the measurement distance be greater than the largest of $2D^2/\lambda$ (the phase uncertainty limit), $3D$ (the amplitude uncertainty limit), and 3λ (the reactive Near-Field limit), where D is the dimension of the radiator and λ is the free-space wavelength at the frequency band of interest. For a free space test, D would simply be the largest dimension of the EUT, but some portion of the head/hand phantom must be included in D for head/hand phantom tests. For purposes of this test plan, D is selected to be the dimension of that part of the head/hand phantom that participates significantly in determining the TRP or TIS of the EUT, and is chosen as 300 mm. The details of the calculations are given for informational purposes only.

TABLE 3-2 DERIVATION OF MINIMUM MEASUREMENT DISTANCE FOR HANDHELD EUTS (INFORMATIVE ONLY)

Band	Lower Frequency (MHz)	Upper Frequency (MHz)	λ_L (m)	λ_U (m)	$R > \frac{2D^2}{\lambda_U}$ (m)	$R > 3D$ (m)	$R > 3\lambda_L$ (m)	Strictest Criterion (m)
3GPP Band 12	699	746	0.43	0.40	0.45	0.90	1.29	1.29
3GPP Band 17	704	746	0.43	0.40	0.45	0.90	1.28	1.28
3GPP Band 13	746	787	0.40	0.38	0.47	0.90	1.21	1.21
3GPP Band 14	758	798	0.40	0.38	0.48	0.90	1.19	1.19
Cellular 3GPP Band 26	814	894	0.37	0.34	0.54	0.90	1.11	1.11
Cellular (3GPP Band 5)	824	894	0.36	0.34	0.54	0.90	1.09	1.09
GPS	1574.4	1576.44	0.19	0.19	0.95	0.90	0.57	0.95
AWS-1 TX (3GPP Band 4 TX)	1710	1755	0.18	0.17	1.05	0.90	0.53	1.05
PCS (3GPP Band 2)	1850	1990	0.16	0.15	1.19	0.90	0.49	1.19
3GPP Band 25	1850	1995	0.16	0.15	1.20	0.90	0.49	1.20
AWS-1 RX (3GPP Band 4 RX)	2110	2155	0.14	0.14	1.29	0.90	0.43	1.29
3GPP Band 41	2496	2690	0.12	0.11	1.61	0.90	0.36	1.61

Future additions of new frequency bands will follow the same Far-Field criteria derivation. It is understood that Near-Field measurement techniques can permit an accurate measurement to be performed at distances smaller than those specified here, with proper mathematical manipulation of the raw amplitude and phase data. Such systems may be considered by CTIA for inclusion in this test plan when they have been demonstrated for TRP and TIS measurements for the relevant modulation methods.

3.2 Equipment Required

Details on the symmetry antenna can be found in Appendix F.

1. Anechoic chamber and spherical positioning system to be characterized. For the purpose of these tests, this chamber must be large enough to allow the Measurement Antenna (MA) to be at least *R* (the minimum measurement distance specified in Table 3-1 for the frequency band being tested) from center of rotation of the EUT and the test site must be reasonably free of interference. This method is intended to characterize the effect of a variety of positioning systems on the required pattern tests. However, reasonable precautions should be taken to avoid designs that would reflect significant radiated energy back into the test region or absorb significant energy out of the test region. Such systems may cause significant error in the measurement results and defeat the purpose of this test.

2. Sleeve dipole probe antennas with less than ±0.1 dB of asymmetry[2] in the azimuth plane pattern for each frequency called out in Section 3.3.
3. Loop probe antennas with less than ±0.1 dB of asymmetry in the azimuth plane pattern for each frequency called out in Section 3.3.

Note: *It is necessary that the above antennas be optimized for the respective frequencies as indicated in Section 3.3.*

4. Low dielectric constant support structure (e.g. Styrofoam) for positioning the probe antennas
5. Measurement antenna(s) (e.g., horn or dipole used during antenna measurements)
6. Network analyzer or signal generator/measurement receiver.

3.3 Test Frequencies

Frequencies to be used to test for quiet zone accuracy:

TABLE 3-3 QUIET ZONE ACCURACY FREQUENCIES

Band	Test Frequency (MHz)
LTE 700 MHz (3GPP Bands 12, 17, 13,14)[1]	722 ± 1 MHz
Cellular (3GPP Band 5) and 3GPP Band 26[1]	836.5 ± 1 MHz
GPS	1575.42 ± 1 MHz
AWS-1 TX (3GPP Band 4 TX)	1732.5 ± 1 MHz
PCS (3GPP Band 2) and 3GPP Band 25[1]	1880 ± 1 MHz
AWS-1 RX (3GPP Band 4 RX)	2132.5 ± 1 MHz
Bands in the range 2300-2800 MHz[1]	2450 ± 1MHz
Note 1: Note that the test frequencies have been chosen to optimize the quiet zone test requirements.	

2. The asymmetry specification for purposes of this measurement may be stated more specifically as the pattern shall not deviate from a perfect circle by more than 0.1 dB (0.2 dB peak-to-peak). Sleeve dipoles and center fed balanced loop antennas are recommended since the cable and feed point may be arranged in such a way that interactions with the measurement are minimized. The gain and efficiency of this antenna is immaterial since the measurement seeks to determine deviations in the measured antenna pattern caused by reflections within the measurement chamber.

3.4 Terminology and Coordinate Systems

This test procedure has been designed to be as generic as practical in order to produce similar results for any test system. The principal goal is to qualify the behavior of the quiet zone from as many orientations as practical.

Starting from the classical spherical coordinate system shown in Figure 3-1(a), the Phi (ϕ) axis is defined as being along the Z-axis. Treating this as the coordinate system of the EUT is the equivalent of assuming the EUT is mounted directly to the Phi-axis rotator. Then as the Phi-axis rotates, the orientation of the Theta axis varies with respect to the EUT (see Figure 3-1b).

FIGURE 3-1 SPHERICAL COORDINATE SYSTEM

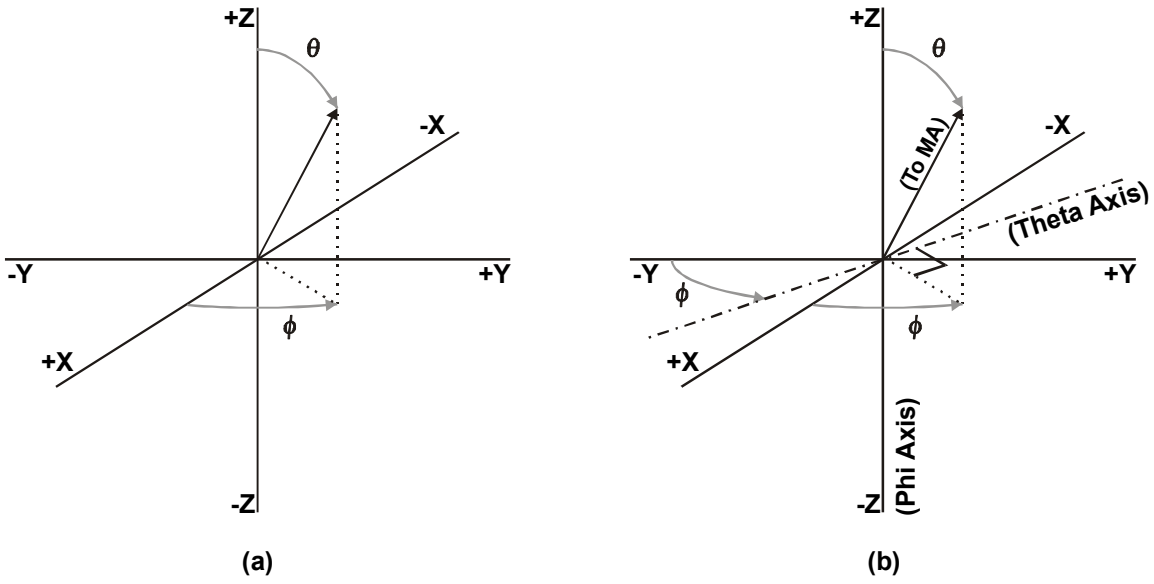

In conjunction with defining the spherical coordinate system, it is necessary to define the two polarizations to be used for measuring total field at each point. The polarizations are identified in terms of the two rotational axes, such that the Phi polarization is along the direction of motion when the Phi-axis rotates and the Theta polarization is along the direction of motion when the Theta-axis rotates (see Figure 3-2).

FIGURE 3-2 MEASUREMENT ANTENNA POLARIZATIONS

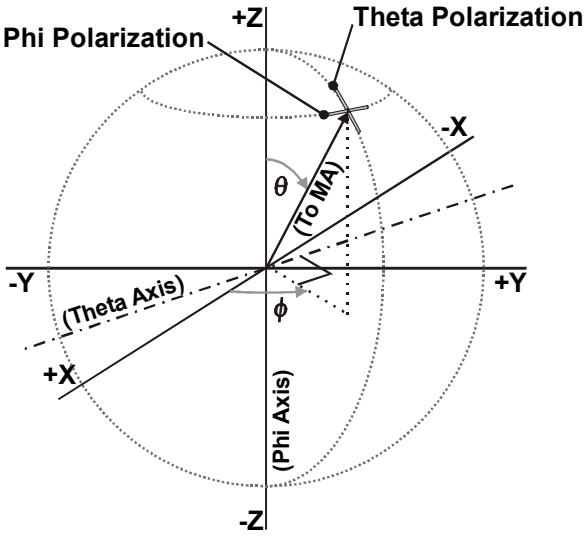

The test plan assumes that the EUT will be supported by some sort of structure along the -Z-axis, which is likely to obstruct or obscure the measurement of the data point at the θ=180° point. The resulting spherical coverage required for a pattern test (based on 15 degree steps) is given in Figure 3-3, which shows that the whole 3D surface is included in the testing, with the exception of the area for which $|\theta| > 165$. The ripple test is intended to cover the same range of angles for each axis as are required to perform a pattern measurement. Thus, the Theta-axis ripple test only extends to θ=165°.

FIGURE 3-3 SPHERICAL COVERAGE AND ORIENTATION OF SUPPORT STRUCTURE WITH RESPECT TO COORDINATE SYSTEM

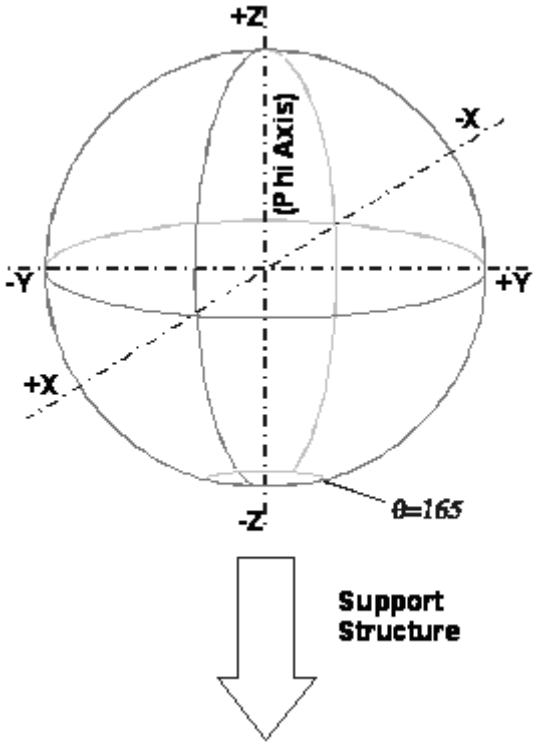

For the purposes of these tests, two principal categories of positioning systems will be defined, based on expected methods of performing spherical pattern tests. These are distributed-axis systems and combined-axis systems. Distributed-axis systems move the measurement antenna about the EUT and Phi-axis positioner (Figure 3-4 a) and are representative of most conical cut method systems. Combined-axis systems mount the Phi-axis positioner on the Theta-axis positioner to rotate the EUT along two axes (Figure 3-4 b). Examples of this type of system include so-called multi-axis positioning systems and the manual great-circle cut method. The ripple test is intended to cover the same range of angles and perform an equivalent measurement no matter what the design of the positioning system.

FIGURE 3-4 ILLUSTRATIONS OF TYPICAL DISTRIBUTED-AXIS SYSTEM (A) AND COMBINED-AXIS SYSTEM (B)

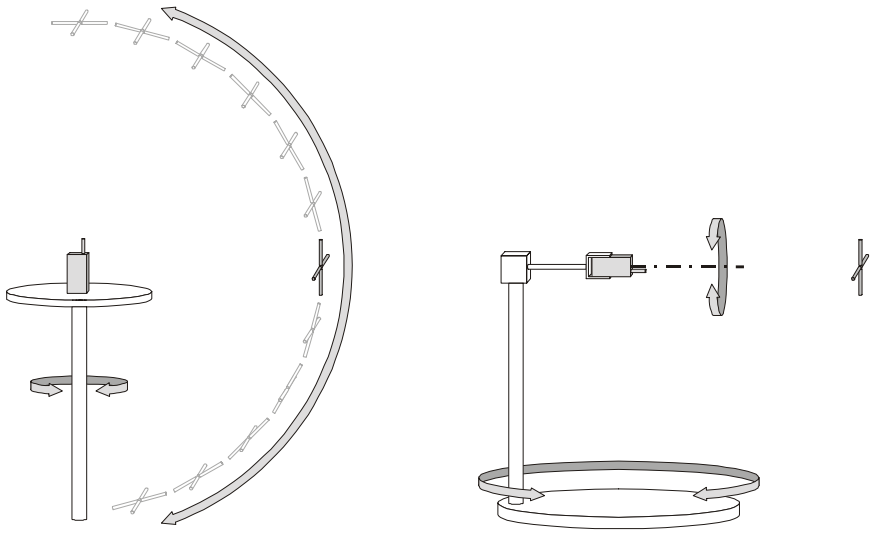

3.5 Basic Measurement Procedure

There are two main parts to the measurement procedure; the Phi-axis ripple test and the Theta-axis ripple test. This procedure shall be followed to verify the performance of the test system for each variation in the mounting system (i.e., free-space vs. head/hand phantom) to be used in normal testing. All required mounting structure and test equipment required for normal testing shall be in place, subject to the allowances specified below. Note that for manual great circle cut systems, it may be necessary to test each different support used to position the EUT to different Phi angles.

In addition, it is necessary to ensure the symmetry of the probe antennas used to perform the test. This may be certified by a qualified calibration lab prior to their use, or may be verified onsite provided sufficient symmetry exists in the probe antenna support structure to demonstrate the required symmetry.

3.5.1 Probe Antenna Symmetry Test

This test is intended for qualification of the symmetry of the probe antennas. It is not considered a direct part of the ripple test, but rather a certification step to insure that the probe may be used to satisfy the ripple test requirements. As such, the system configuration may be modified from the ripple test configuration as required to perform this verification.

For each probe antenna to be verified, repeat the following steps:

1. Mount the probe antenna at the center of a dielectric support such that the probe's axis is centered along the positioner's axis of rotation and the axis of rotation points through the nulls in the pattern of the dipole or loop. (Normally this test would be done using the Phi-axis of the positioner, but either axis is acceptable as long as the desired result is achieved). Ensure that there is no wobble in the orientation of the probe through a 360° rotation of the axis.
2. Place the Measurement Antenna in the co-polarized position (parallel to the axis of a dipole and tangential to the loop) a distance at least *R* (the minimum measurement distance specified in Table 3-1 for the frequency band being tested) meters away from the probe antenna. Adjust the elevation of the Measurement Antenna to be at boresight with the center of the probe antenna.
3. Attach a signal source to a coaxial cable feeding the probe antenna and set the frequency to the appropriate channel. Set the amplitude to a level appropriate for the measurement receiver. Connect a measurement receiver to the Measurement Antenna. Ensure that all coaxial cables are dressed to minimize effects upon the measurement results.
4. Rotate the probe antenna about its axis and record the signal received by the Measurement Antenna at every 2 degrees of azimuth for a total of 360°.
5. Record the measurement results to a file that can be imported into a Microsoft® Excel spreadsheet.
6. Repeat steps 1 through 6 above for each probe antenna.

Note: *The sleeve dipole and loop antennas may be combined into one reference assembly, thus allowing the two data sets to be taken conjointly.*

The total ripple observed in this symmetry test must be less than ±0.1 dB from the mean (0.2 dB peak-to-peak) in order for the associated probe antenna to be used for the remaining tests.

3.5.2 Phi-Axis Ripple Test

The Phi-axis ripple test covers a cylindrical quiet zone 300 mm in diameter around the Phi-axis and 300 mm long. Each probe antenna is oriented with its axis parallel to the Phi-axis at a total of six positions defined by three positions along the Phi-axis (one at the center of the quiet zone and one each ± offset along the Phi-axis), combined with one 150 mm offset perpendicular to the Phi-axis for each axial offset. At each position, the Phi-axis is rotated 360° with the measurement antenna positioned at Theta = 90° to record the ripple. Each position is labeled by its radial and axial offset from the center position, (*R*,*Z*), using 0, +, or - to represent the appropriate offset in each direction. See Figure 3-5 for additional information.

FIGURE 3-5 PHI-AXIS TEST GEOMETRY

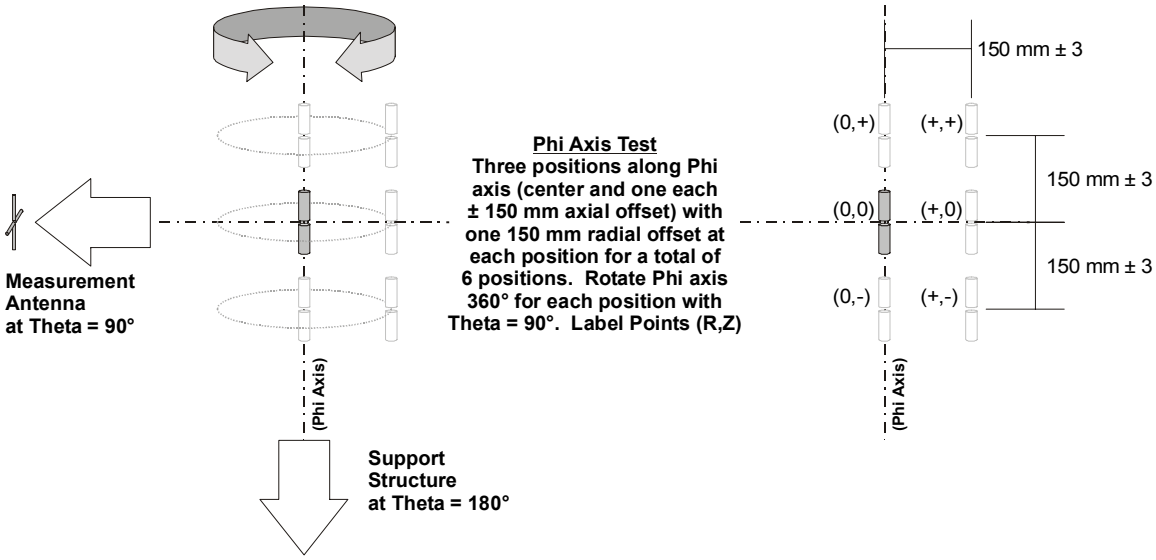

For each polarization and band, repeat the following steps:

1. Place the Measurement Antenna and any associated Theta-axis positioner at Theta = 90° such that the Measurement Antenna is boresight with the center of the quiet zone. The Measurement Antenna should be at the same separation distance to be used for actual pattern measurements. This distance must be at least *R* (the minimum measurement distance specified in Table 3-1 for the frequency band being tested) meters away from the center of the quiet zone. Select or adjust the polarization to correspond to the polarization (Theta or Phi) to be tested.
2. Mount the probe antenna to the Phi-axis positioner using a low permittivity dielectric support. Use the sleeve dipole for the Theta polarization and the loop for the Phi polarization. At each of the six offset positions, ensure that the axis of the probe is parallel to the Phi-axis of rotation.
3. Attach a signal source to a coaxial cable feeding the probe antenna and set the frequency to the appropriate channel. Set the amplitude to a level appropriate for the measurement receiver. Connect a measurement receiver to the Measurement Antenna. The received signal during the ripple test measurement should be at least 40 dB above the noise floor or noise errors greater than 0.1 dB will result. Ensure that all coaxial cables are dressed to minimize effects upon the measurement results.
4. Rotate the probe antenna about the Phi-axis and record the signal received by the Measurement Antenna at every 2 degrees of azimuth for a total of 360°.
5. Record the measurement results to a file that can be imported into a Microsoft® Excel spreadsheet.

6. Record test parameters including: (a) the distance between the measurement and probe antennas, (b) cable losses and other losses associated with the measurement setup, (c) the power of the signal source at the probe antenna connector, and (d) the noise level of the receiver with no signal applied.

7. Repeat steps 1 through 6 above for each probe antenna (polarization and band) for each of the 6 test positions, offsetting 150 mm ±3 mm from the center of the quiet zone in each direction along the Phi-axis and radially from the center.

3.5.3 Theta-Axis Ripple Test

The Theta-axis ripple test covers a quiet zone sphere 300 mm in diameter. Each probe antenna is oriented with its axis parallel to the Theta-axis at a total of seven positions defined by two 150 mm offsets along each Cartesian axis. At each position, the Theta-axis is rotated from -165° to 165° with the Measurement Antenna positioned at Phi = 0°, or for two separate tests from 1-165° with the measurement antenna positioned at Phi = 0° and again at Phi = 180°, to record the ripple. Each position is labeled by its offset from the center position along each axis, (X, Y, Z), using 0, +, or - to represent the appropriate offset in each direction. See Figure 3-6 for additional information.

FIGURE 3-6 THETA-AXIS TEST GEOMETRY

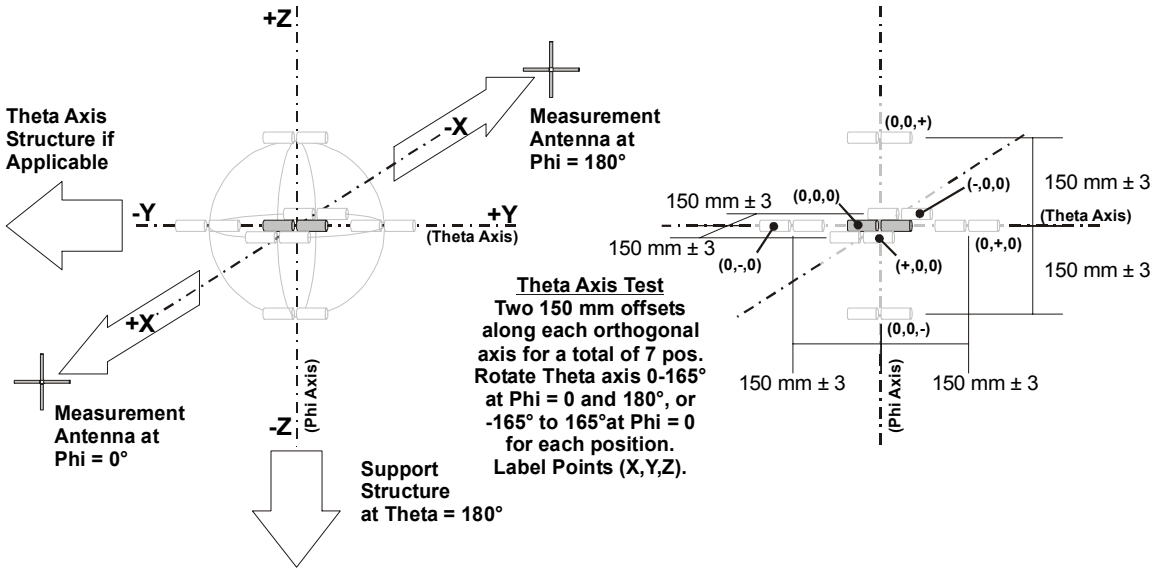

For each polarization and band, repeat the following steps:

1. Place the Measurement Antenna such that it is boresight with the center of the quiet zone. The antenna should be at the same separation distance to be used for actual pattern measurements. This distance must be at least *R* (the minimum measurement distance specified in Table 3-1 for the frequency band being tested) meters away from the center of the quiet zone. Select or adjust the polarization to correspond to the polarization (Theta or Phi) to be tested.
2. With the Phi axis positioner set to 0° (or for both Phi = 0 and 180° in cases where the Theta positioner range of motion is less than ±165°) mount the probe antenna with its axis parallel to the Theta-axis of rotation using a low permittivity dielectric support. Use the sleeve dipole for the Phi polarization and the loop for the Theta polarization. At each of the seven offset positions, ensure that the axis of the probe is parallel to the Theta-axis of rotation. In cases where the Theta positioner range of motion is less than ±165°, the probe antenna and associated cables should maintain the same orientation with respect to the Phi-axis positioner structure for both the Phi = 0 and 180° test cases. (That is, the probe should be mounted such that it rotates with the Phi positioner.)
3. Attach a signal source to a coaxial cable feeding the probe antenna and set the frequency to the appropriate channel. Set the amplitude to a level appropriate for the measurement receiver. Connect a measurement receiver to the Measurement Antenna. The received signal during the ripple test measurement should be at least 40 dB above the noise floor or noise errors greater than 0.1 dB will result. Ensure that all coaxial cables are dressed to minimize effects upon the measurement results.
4. Rotate the probe antenna about the Theta-axis and record the signal received by the Measurement Antenna at every 2 degrees of azimuth for a total of 330°, or two separate tests of 164°.

Note: *To cover the same range of angles at 2° steps, the range of the two individual tests is reduced by one degree since the zero degree position is not measured.*

5. Record the measurement results to a file that can be imported into a Microsoft® Excel spreadsheet.
6. Record test parameters including: (a) the distance between the measurement and probe antennas, (b) cable losses and other losses associated with the measurement setup, (c) the power of the signal source at the probe antenna connector, and (d) the noise level of the receiver with no signal applied.
7. Repeat steps 1 through 6 above for each probe antenna (polarization and band) for each of the 7 test positions, offsetting 150 mm ±3 mm from the center of the quiet zone along each of the six cardinal directions.

3.5.4 Allowances and Adjustments

When implementing these tests on actual positioning systems, it is possible that there will be interference issues between the required test positions and the mechanical support structure required to hold the EUT or head/hand phantom during a test. This section details a list of allowances whereby the test system may be modified slightly from its normal test configuration in order to perform the ripple tests. Where possible, the alterations to the system should be minimized, and the final acceptability of any adjustment shall be the decision of the appropriate CTIA subject matter expert (SME).

1. The portion of the support structure required to mount the EUT to the Phi-axis positioning structure for the free-space test may be removed to clear the region of the quiet zone for the ripple test for both axes. The tester should be prepared to show that the structure removed has a negligible impact on the free-space pattern measurement of the EUT, compared to the remaining structure included in the ripple test.
2. Support materials with a dielectric constant less than 1.2 may be removed to a maximum distance of 250 mm outside the quiet zone (400 mm from the center).
3. An adapter plate comprising up to 13 mm of dielectric material with a permittivity less than 4.5 and residing wholly within the footprint of the base of the head phantom base may be considered part of the head phantom and removed with the head phantom for the purposes of the ripple test. In addition, any support structure used to hold the hand phantom should be removed, because a separate uncertainty term is used to address its effect.
4. For the Phi-axis ripple test, where mechanical interference with support structure may prevent rotation of the probe antennas around the Phi-axis, the Phi-axis positioning structure may be moved away from the quiet zone the minimum distance required to perform the (X,-) position tests. It should not be necessary to move the support for the remaining Phi-axis positions.
5. To avoid near-field effects that may incorrectly bias the ripple test, no remaining support material with a dielectric constant greater than 1.2 should be within 75 mm of any point on the physical surface of the antenna portion of any probe. This is primarily expected to be an issue for the Theta-axis test where loops and dipoles may be expected to physically intersect with any remaining head phantom support. To accommodate this possibility without eliminating a required test point, the test point closest to the Phi-axis support (0,0,-) may be substituted with one of the following tests, in order of preference:
    a. The maximum of the two points defined by offsetting 150 mm ±3 mm in either direction parallel to the Theta-axis (Y-axis) from the (0,0,-) point, labeled as (0,+,-) and (0,-,-), may be substituted for (0,0,-).
    b. If both of those points cannot be measured, either:

- The maximum of the two points defined by offsetting 150 mm ±3 mm in either direction along the direction perpendicular to both the Theta- and Phi-axes (X-axis) from the (0,0,-) point, labeled as (+,0,-) and (-,0,-), may be substituted for (0,0,-).

  OR

- The Phi-axis positioning structure may be moved away from the quiet zone the minimum distance required to provide the required clearance from the surface of the probe antennas

FIGURE 3-7 ILLUSTRATION OF ALTERNATE PROBE POSITIONS ALLOWED FOR THETA-AXIS TEST

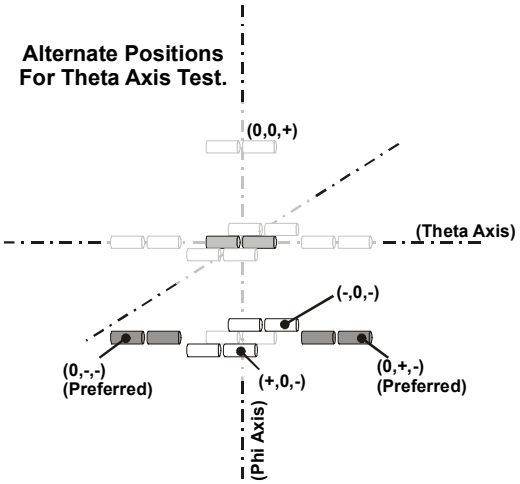

6. In case the θ-axis or ϕ-axis positioning systems cannot accommodate 2° angular resolution, a coarser angular sampling is allowed provided the number of offset positions along the cardinal axes is increased accordingly. In any case, the sample spacing shall not exceed 15°. The offset positions shall be computed in the following manner:

   a. Determine the ratio of the achievable angular resolution to the nominally specified 2° resolution.

   b. Round this ratio up to the next whole number.

   c. Divide 150 mm by the number obtained above and round to the nearest 5 mm. This will be the offset increment.

   d. Starting from the center, create the list of offset positions along the cardinal axes, each position separated by the offset increment. The last offset will be exactly 150 mm, even if the distance between the penultimate and last offset positions will be less than one increment (See examples in Table 3-4).

Consider the following acceptable examples for various angular resolutions:

TABLE 3-4 EXAMPLE SCENARIOS FOR REDUCED ANGULAR RESOLUTION RIPPLE TESTS

Angular Resolution (deg)	Rounded Ratio of Resolution Relative to 2°	Offset Increment (mm)	X-Offsets (mm)	Y-Offsets (mm)	Z-Offsets (mm)
2	1	150	±150	±150	±150
5	3	50	±50, ±100, ±150	±50, ±100, ±150	±50, ±100, ±150
10	5	30	±30, ±60, ±90, ±120, ±150	±30, ±60, ±90, ±120, ±150	±30, ±60, ±90, ±120, ±150
15	8	20	±20, ±40, ±60, ±80, ±100, ±120, ±140, ±150	±20, ±40, ±60, ±80, ±100, ±120, ±140, ±150	±20, ±40, ±60, ±80, ±100, ±120, ±140, ±150

3.6 Additional Ripple Test Requirements for Notebook PC Sized Test Volumes

Prior to certification testing of notebooks or similar devices not fitting within a 300 mm diameter sphere, additional ripple tests will be required. The quiet zone shall be probed following the methods described in Section 3.4 and Section 3.5, but with added probe antenna offsets corresponding to the largest volume for which the test system will be authorized. Additional allowances have been incorporated in the test procedure to accommodate ripple testing with commonly used positioners and fixtures previously certified for handset testing. The overall results shall be used in estimating measurement uncertainty for these larger devices. To have the most accurate uncertainty estimates for different types of test objects, it is recommended that the CATL provides separate uncertainty calculations for handset measurements and notebook measurements.

The following subsections describe changes and additions to the tests described in Section 3.5 for a notebook type device with maximum physical dimension, D. For notebook testing, D shall be assumed to be 500 mm, which accounts for the maximum distance from corner to corner in the largest available “desktop replacement” notebooks. Notebooks with large form factors typically are wider than tall and have the embedded antennas located in the display. For these reasons and to accommodate existing positioner systems, the ripple test will assume that there will be no source of radiation at $Z < -150$ mm. The effective ripple scan volume will be a cylinder of diameter $D = 500$ mm and axial extension from $Z = -150$ mm to $Z = 210$ mm. See Figure 3-8 for an illustration of the alternate test volume for notebook computers.

FIGURE 3-8 ILLUSTRATION OF THE INCREASE IN TEST VOLUME FOR NOTEBOOK PCS

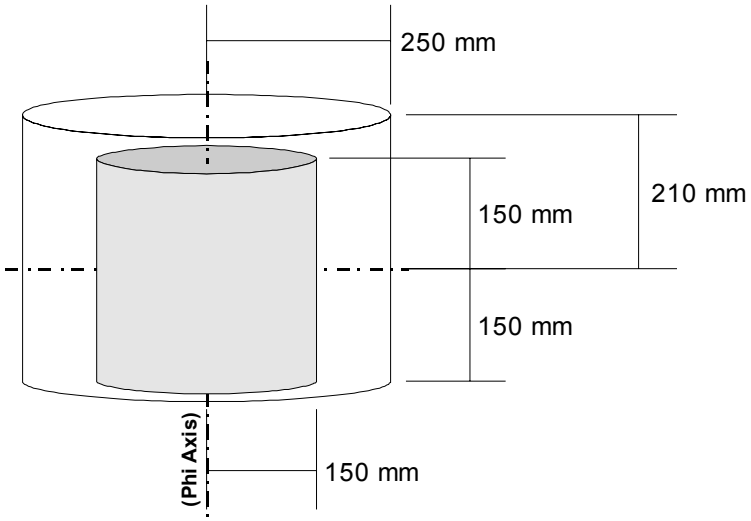

3.6.1 Probe Antenna Symmetry Test

Provided all ripple tests are performed using the same probe antennas, no additional testing is required to validate the probe antenna symmetry.

3.6.2 Extensions to Phi-Axis Ripple Test

Perform the test as described in Section 3.5.2 for all probe antennas and all bands, but at four additional probe antenna offsets along the radial and axial directions. The four supplementary (*R*,*Z*) positions will then be at (0, +210 mm), (+250 mm, -150 mm), (+250 mm, 0), (+250 mm, +210 mm).

FIGURE 3-9 ILLUSTRATION OF THE ADDITIONAL PHI-AXIS RIPPLE TEST LOCATIONS FOR NOTEBOOK PCS.

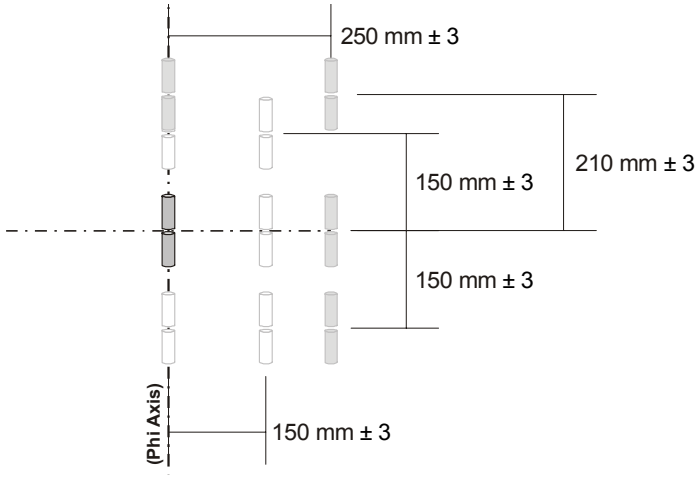

3.6.3 Extension to Theta Axis Ripple Test

Perform the test as described in Section 3.5.3 for all probe antennas and all bands, but at five additional offset positions. The five supplementary positions will be along the cardinal axes at (X,Y,Z) coordinates given by (±250 mm, 0, 0), (0, ±250 mm, 0), and (0, 0, +210 mm).

FIGURE 3-10 ILLUSTRATION OF THE ADDITIONAL THETA-AXIS RIPPLE TEST LOCATIONS FOR NOTEBOOK PCS

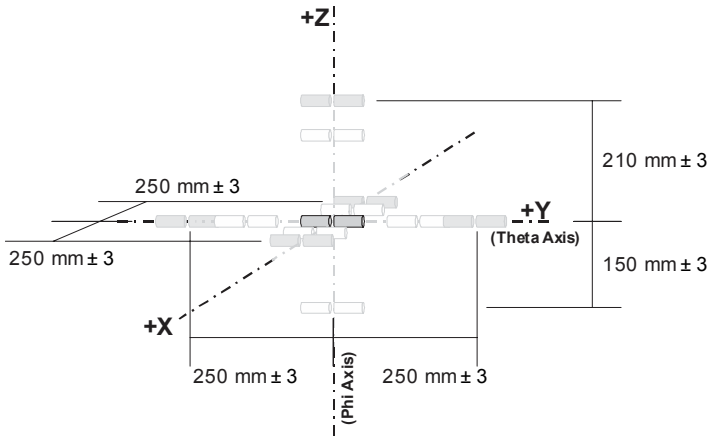

3.6.4 Additions to Allowances and Adjustments

This section describes modifications to the allowances that are given in Section 3.5.4 that will be made to accommodate the ripple test in practical automated systems. Where possible, the alterations to the system should be minimized, and the final acceptability of any adjustment shall be the decision of the appropriate CTIA subject matter expert (SME).

1. The portion of the support structure required to mount the EUT to the Phi-axis positioning structure for the free-space test may be removed to clear the region of the quiet zone for the ripple test for both axes. The tester should be prepared to show that the structure removed has a negligible impact on the free-space pattern measurement of the EUT, compared to the remaining structure included in the ripple test.
2. Support materials with a dielectric constant less than 1.2 may be removed to a maximum distance of 250 mm outside the quiet zone (400 mm from the center).
3. An adapter plate comprising up to 13 mm of dielectric material with a permittivity less than 4.5 and residing wholly within the footprint of the notebook base may be considered part of the notebook and removed for purposes of the ripple test. Additional dielectric brackets and fixtures necessary to maintain screen notebook and display position will also be removed for the purposes of the ripple test, provided the dielectric material has a permittivity of less than 4.5, and these materials protrude less than 13 mm beyond any surface of the notebook, and such fixtures are not physically located within 100 mm of the tested antenna(s) in the device.
4. For the Phi-axis ripple test, where mechanical interference with support structure may prevent rotation of the probe antennas around the Phi-axis, the Phi-axis positioning structure may be moved away from the quiet zone the minimum distance required to perform the (+250 mm, -150 mm) position tests. It should not be necessary to move the support for the remaining Phi-axis positions.
5. To avoid near-field effects that may incorrectly bias the ripple test, no remaining support material with a dielectric constant greater than 1.2 should be within 75 mm of any point on the physical surface of the antenna portion of any probe. This is primarily expected to be an issue for the Theta-axis test where loops and dipoles may be expected to physically intersect with any remaining SAM phantom support. As this ripple test has been limited to -150 mm offsets along the Z-axis, the following text is identical to the text in Section 3 except that for clarity, the "+/-" notation has been replaced with specific coordinates. The test point closest to the Phi-axis support (0, 0, -150 mm) may be substituted with one of the following tests, in order of preference:
    a. The maximum of the two points defined by offsetting 150 mm ±3 mm in either direction parallel to the Theta-axis (Y-axis) from the (0,0, -150 mm) point, labeled as (0, +150 mm, -150 mm) and (0, -150 mm, -150 mm), may be substituted for (0, 0, -150 mm).

b. If both of those points cannot be measured, either:

– The maximum of the two points defined by offsetting 150 mm ±3 mm in either direction along the direction perpendicular to both the Theta-and Phi-axes (X-axis) from the (0, 0, -150 mm) point, labeled as (150 mm, 0, 150 mm) and (-150 mm, 0, -150 mm), may be substituted for (0, 0, -150 mm).

or

– The Phi-axis positioning structure may be moved away from the quiet zone the minimum distance required to provide the required clearance from the surface of the probe antennas.

6. In case the θ-axis or ϕ-axis positioning systems cannot accommodate 2° angular resolution, a coarser angular sampling is allowed provided the number of offset positions along the cardinal axes is increased accordingly. In any case, the sample spacing shall not exceed 15°. The offset positions shall be computed in the following manner:

a. Determine the ratio of the achievable angular resolution to the nominally specified 2° resolution.

b. Round this ratio up to the next whole number.

c. Multiply this ratio by 0.4 to account for the increase in radius of the test volume.

d. Round this ratio up to the next whole number.

e. Divide 100 mm by the number obtained above and round to the nearest 5 mm. This will be the offset increment.

f. Starting from 150 mm, create the list of offset positions along the cardinal axes, each position separated by the offset increment calculated above. The last offset will be exactly 250 mm for the X and Y axes and 210 mm for the +Z axis, even if the distance between the penultimate and last offset positions will be less than one increment.

3.7 Applying the Ripple Test Procedure to Specific Systems

The procedure presented in the previous sections should be applicable to any fully automated spherical pattern measurement system. This section provides several illustrations to assist in interpretation of the requirements for different system types.

FIGURE 3-11 PHI-AXIS TEST GEOMETRY FOR TYPICAL DISTRIBUTED AXIS SYSTEM (A), AND A TYPICAL COMBINED AXIS SYSTEM (B)

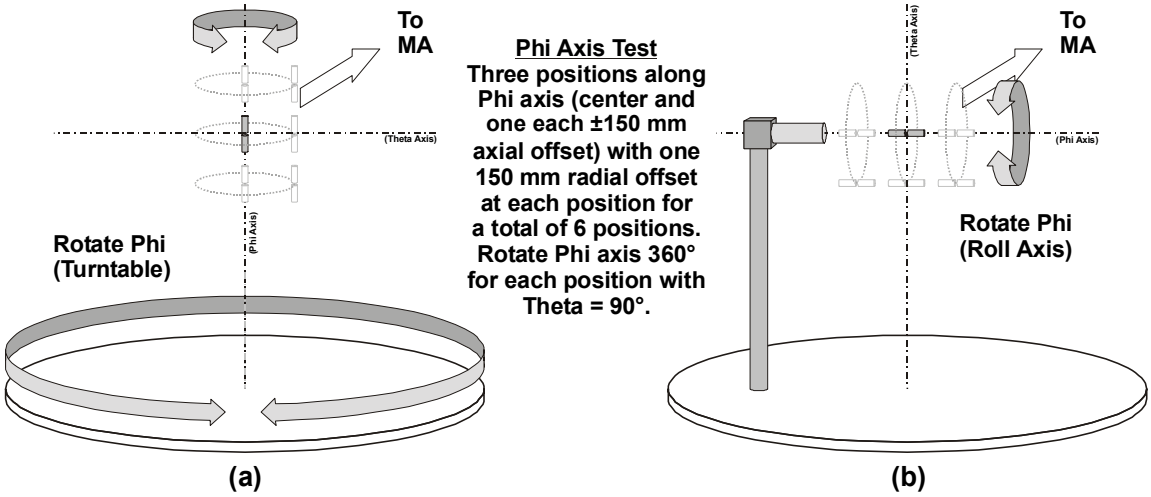

FIGURE 3-12 THETA-AXIS TEST GEOMETRY FOR TYPICAL DISTRIBUTED AXIS SYSTEM (A), AND A TYPICAL COMBINED AXIS SYSTEM (B)

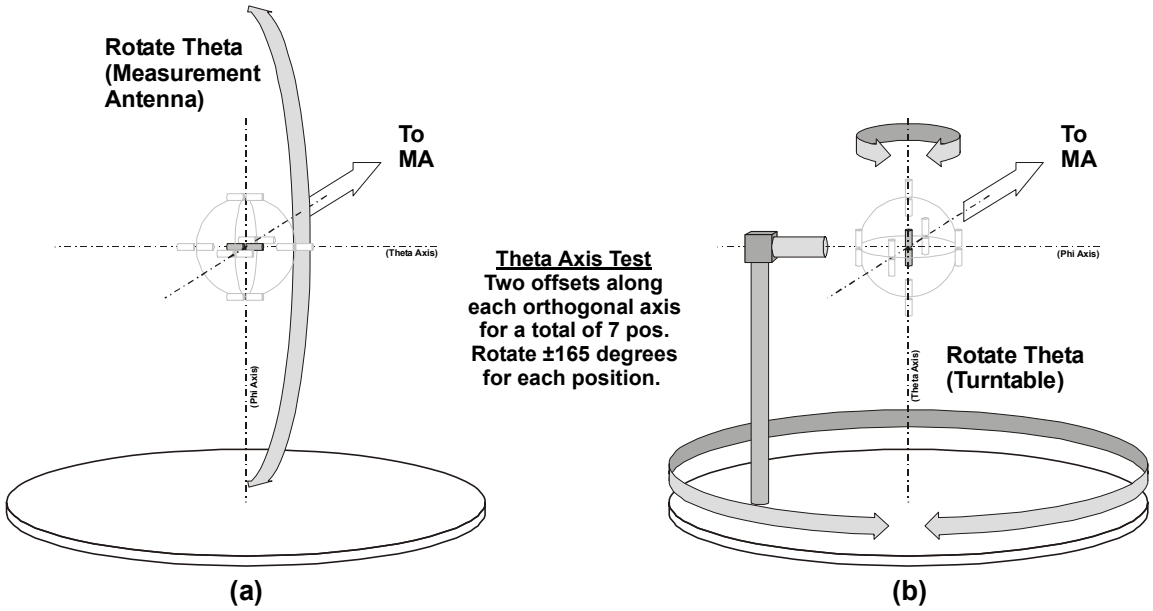

FIGURE 3-13 EXAMPLE ILLUSTRATING SOME ALLOWED ALTERATIONS OF TEST SETUP FOR PHI-AXIS

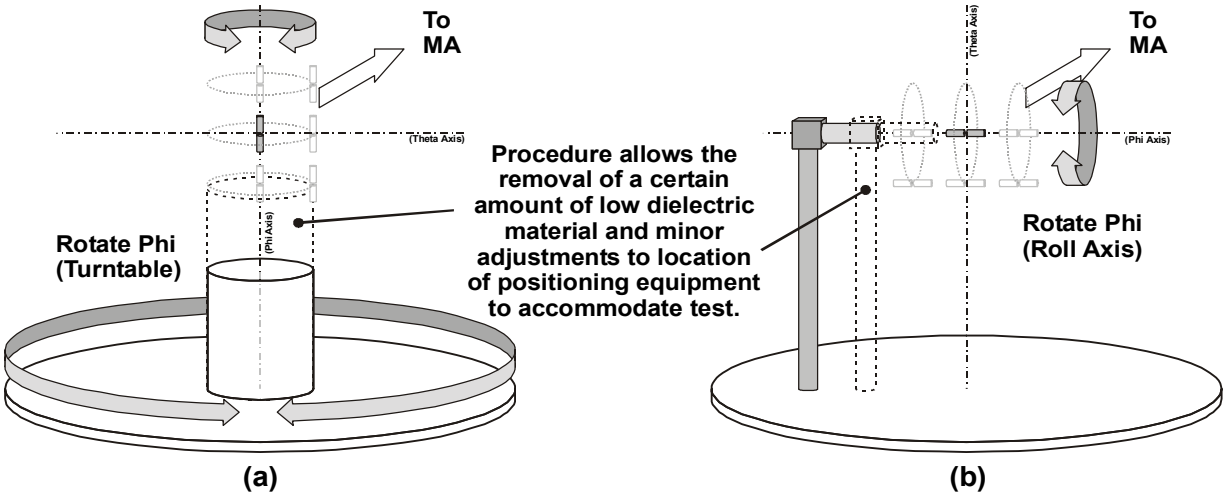

Refer to text for details.

FIGURE 3-14 EXAMPLE ILLUSTRATING ALTERNATE POSITIONS AND ALLOWED ALTERATIONS FOR THETA-AXIS TEST

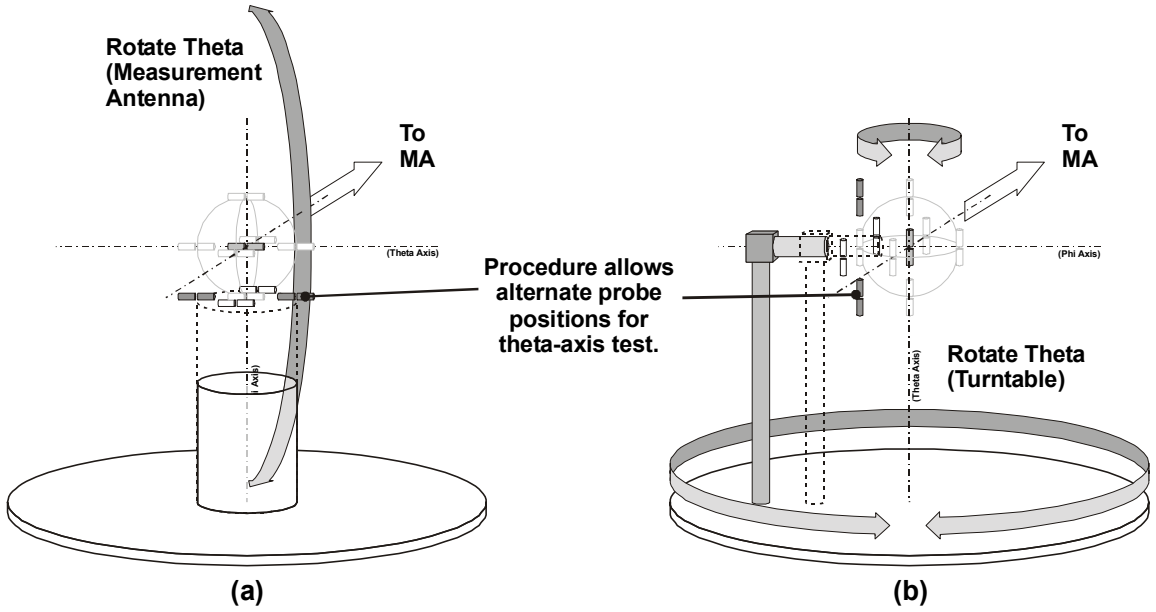

Refer to text for details.

3.8 Analysis

1. Adjust the off-axis ripple measurements to correct for distance variation using the equation for the Law of Cosines (see Figure 3-15).

Note: *For long range lengths where this adjustment may be considered negligible, it is not required to apply the correction.*

2. Plot the corrected patterns using polar coordinates.
3. Use the procedures defined in Appendix G.8.1.1 to calculate the resulting measurement uncertainty due to the ripple test results.
4. The plot and calculated results are to be supplied as part of the CATL authorization process.

Law of Cosines Adjustment Method (for Far-Field testing)

For coplanar antennas, the Law of Cosines may be used to determine the distance between antennas as one is rotated about a center axis. Since each ripple test measurement is self-referencing, minor differences in elevation will have only second or third order effects on the result. Refer to Figure 3-15 to aid in understanding this discussion.

Note: *This illustration is a view from the perspective of looking down on vertically oriented antennas from above.*

FIGURE 3-15 GEOMETRY FOR LAW OF COSINES RANGE LENGTH ADJUSTMENT

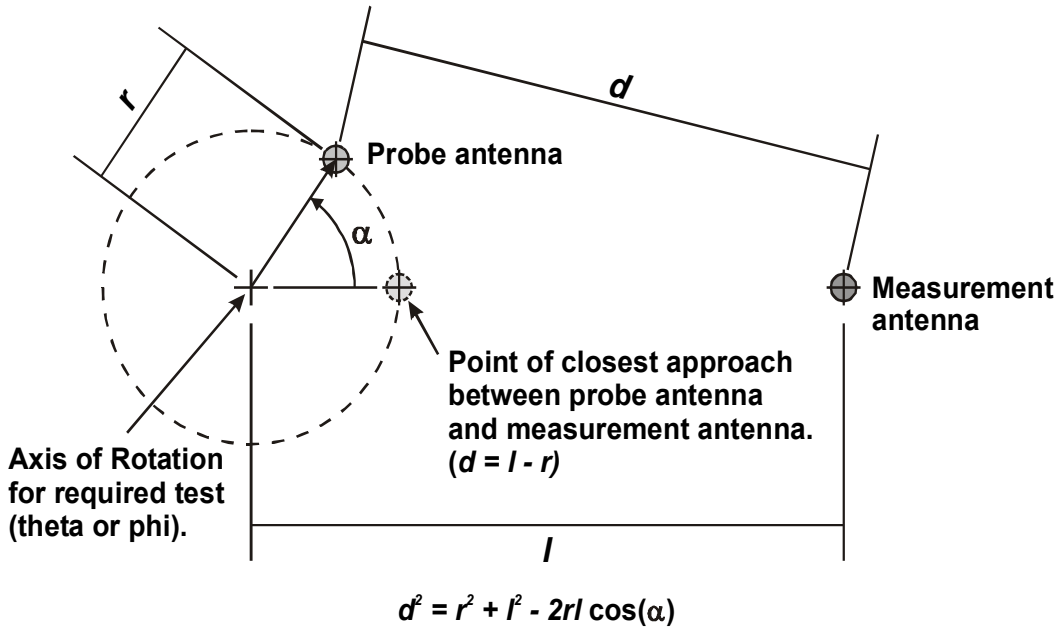

- Let l be the distance measured between the axis of rotation and the Measurement Antenna
- Let r be the measured distance that the probe antenna is offset from the axis of rotation.
- Let α be the rotation angle of the probe antenna where 0-degrees is the point where the probe antenna is closest to the Measurement Antenna and 180-degrees is the point where the probe antenna is farthest away from the Measurement Antenna. This is either the Theta or Phi angle for the associated ripple test, with the required angular offset applied (i.e. $\alpha = \theta + 0$, 90, or 180°). The corrections for the Phi-axis test may be simplified by starting with the probe antenna closest to the measurement antenna so that $\alpha = \phi$.
- Let d be the calculated distance between the probe antenna and the Measurement Antenna. Then d may be calculated from the Law of Cosines as follows:

EQUATION 3.1

$$d^2 = r^2 + l^2 - 2\,r\,l\cos(\alpha)$$

- Adjust the measured signal power to account for distance variation using the following equation:

EQUATION 3.2

$$P_{adj}\ (\text{dBm}) = P_{meas}\ (\text{dBm}) + 20\log(d/l)\ (\text{dB})$$

Note: *Parameter r and l must be carefully measured and recorded to enable accurate application of this technique.*

Section 4 Range Reference Requirements

This section describes the required procedure for obtaining the reference measurement used in removing the test system's influence from the Radiated Power and Sensitivity measurements. Before accurate measurements of quantities such as TRP, EIRP, TIS, or EIS can be made, it is necessary to perform a reference measurement to account for the various factors affecting the measurement of these quantities. These factors include components like range length path loss, gain of the receive antenna, cable losses, and so forth. This reference measurement is done using a reference antenna (typically either a dipole or standard gain horn) with known gain characteristics. The reference antenna is mounted at the center of the quiet zone to serve as the substitution antenna under test (AUT). The reference measurement is repeated for each variation of the measurement system (i.e., each polarization of the receive antenna, and each possible signal path to the measurement equipment.). The reference measurement is combined with the gain of the reference antenna to determine an isotropic reference correction to be applied to EUT measurements performed using the test system.

This procedure shall be repeated annually, and any time there is a change in the measurement system that may affect the validity of this reference measurement. For non-permanent range installations (those where elements of the test system are disassembled or removed between tests) this procedure shall be repeated each time the range is reconfigured. It is recommended to perform this procedure on a monthly or quarterly basis to determine system stability.

4.1 Theoretical Background

Each individual data point in a radiated power or sensitivity measurement is referred to as the effective isotropic radiated power or effective isotropic sensitivity. That is, the desired information is how the measured quantity relates to the same quantity from an isotropic radiator. Thus, the reference measurement must relate the power received or transmitted at the EUT test equipment (spectrum analyzer or communication tester) back to the power transmitted or received at a theoretical isotropic radiator. The total path loss then, is just the difference in dB between the power transmitted or received at the isotropic radiator and that seen at the test equipment (see Figure 4-1).

FIGURE 4-1 THEORETICAL CASE FOR DETERMINING PATH LOSS

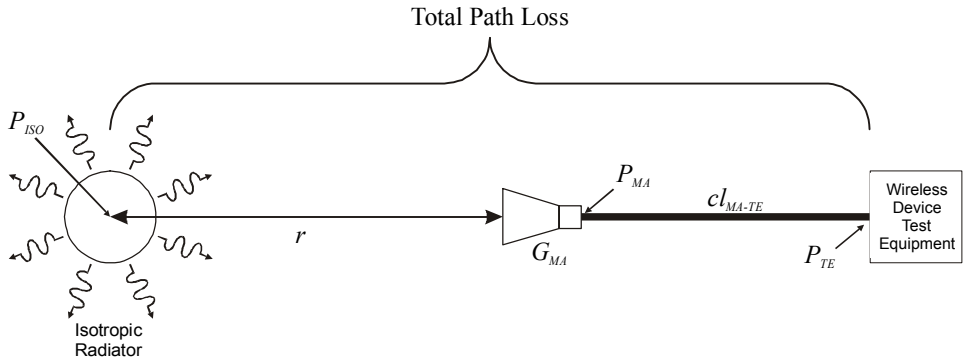

In equation form, this becomes:

EQUATION 4.1

$$PL = P_{ISO} - P_{TE}$$

where PL is the total path loss, P_{ISO} is the power radiated by the theoretical isotropic radiator, and P_{TE} is the power received at the test equipment port. As can be seen in Figure 4-1, this quantity includes the range path loss due to the range length r, the gain of the measurement antenna, and any loss terms associated with the cabling, connections, amplifiers, splitters, etc. between the measurement antenna and the test equipment port.

Figure 4-2 shows a typical real world configuration for measuring the path loss. In this case, a reference antenna with known gain is used in place of the theoretical isotropic source. The path loss may then be determined from the power into the reference antenna by adding the gain of the reference antenna. That is:

EQUATION 4.2

$$P_{ISO} = P_{RA} + G_{RA}$$

where P_{RA} is the power radiated by reference antenna, and G_{RA} is the gain of the reference antenna, so that:

EQUATION 4.3

$$PL = P_{RA} + G_{RA} - P_{TE}$$

FIGURE 4-2 TYPICAL CONFIGURATION FOR MEASURING PATH LOSS

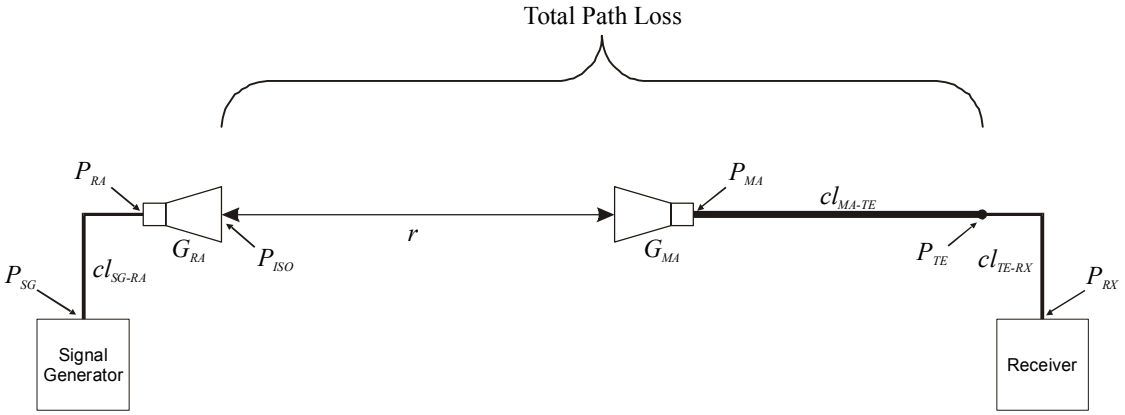

In order to determine P_{RA}, it is necessary to perform a cable reference measurement to remove the effects of the cable loss between signal generator and reference antenna $cl_{SG\ -\ RA}$, and between the test equipment port and the receiver. This establishes a reference point at the input to the reference antenna. Figure 4-3 illustrates the cable reference measurement configuration. Assuming the power level at the signal generator is fixed, it is easy to show that the difference between P_{RA} and P_{TE} in Figure 4-2 is given by:

EQUATION 4.4

$$P_{RA} - P_{TE} = P_{RX}' - P_{RX}$$

FIGURE 4-3 CABLE REFERENCE CALIBRATION CONFIGURATION

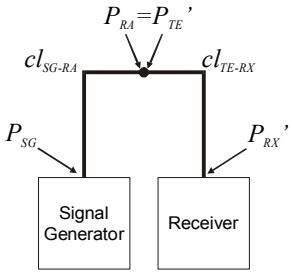

where P_{RX}' is the power measured at the receiver during the cable reference test, and P_{RX} is the power measured at the receiver during the range path loss measurement in Figure 4-2. Note that this formulation assumes that the effects of the reference antenna VSWR are accounted for in the gain of the reference antenna. For more information on this subject, refer to [1]. Thus, the path loss is then just given by:

EQUATION 4.5

$$PL = G_{RA} + P_{RX}' - P_{RX}$$

4.2 Equipment Required

1. Anechoic chamber and spherical positioning system previously characterized per, and meeting the requirements specified in Section 3.
2. Reference antenna(s) with valid calibrations to cover the required range of test frequencies. Low uncertainty precision calibrated sleeve dipoles are recommended as the reference antenna up to 2.5 GHz. Standard gain horns are recommended above 2.5 GHz. The calculated gain of standard gain antennas may be used provided the performance of the antenna has been verified and an uncertainty value has been determined for the calculated gain of the antenna. Other antennas may be used; however, the uncertainty contribution to the resulting measurements due to calibration and phase center issues may be significant.
3. Low dielectric constant support structure (e.g., Styrofoam) for positioning the reference antennas.
4. Measurement antenna(s) (e.g. horn or dipole used to perform measurements of the EUT).

Note: *If multiple measurement antennas are used to cover the required frequency range, the reference measurement must be repeated each time the antennas are repositioned, unless a permanent mounting fixture is used to guarantee repeatable performance. These should be the same antennas used in performing the site characterization in Section 3.*

5. Network analyzer, spectrum analyzer with tracking generator, or stable signal generator and measurement receiver (spectrum analyzer, power meter, etc.) having a wide dynamic range and high linearity, all with current calibration(s).
6. All RF cabling, splitters, combiners, switches, attenuators, etc. required to connect the measurement antenna(s) to the test equipment used for measuring radiated power and sensitivity of the EUT. The connection to the receiver or communication tester used to perform the EUT measurement shall be referred to as the “test port” in this section. These components will be characterized along with the range length and measurement antenna contributions.
7. Additional cabling to reach from the signal source to the reference antenna (the reference port), and from both the reference antenna location and the test port to the

receiver input. The source cabling to the reference antenna should be treated with ferrite beads and routed to minimize its influence on the reference measurement. The effects of these cables will be removed from the reference measurement; however, cable lengths should be kept as short as possible to reduce the associated path loss.

8. Low loss cable adapters for performing various interconnects. These should be characterized to determine their influence on the measurements. That influence may be corrected for if measured, or applied to the measurement uncertainty if estimated.
9. Optional 3 to 10 dB fixed attenuators for reducing standing wave effects in cables.
10. Optional 50 Ω terminations.

4.3 Test Frequencies

Table 4-1 provides the minimum list of reference frequencies to be measured. This assumes that the performance of the test system is relatively flat so that minor variations in frequency around these points will have negligible effect on the reference value. If this is not the case, additional points should be taken to cover each expected EUT test frequency. A swept spectrum reference measurement is recommended to ensure that there aren't any sharp resonances in the measurement system near a required test frequency.

TABLE 4-1 TEST FREQUENCIES FOR THE REFERENCE MEASUREMENT

Band	Frequency Designation	Frequency (MHz)
3GPP Band 12	CH_{11}-TX	699
3GPP Band 12	CH_{11}-RX	729
3GPP Band 12	CH_{12}-TX	707.5
3GPP Band 12	CH_{12}-RX	737.5
3GPP Band 12	CH_{13}-TX	716
3GPP Band 12	CH_{13}-RX	746
3GPP Band 17	CH_{14}-TX	704
3GPP Band 17	CH_{14}-RX	734
3GPP Band 17	CH_{15}-TX	710
3GPP Band 17	CH_{15}-RX	740
3GPP Band 17	CH_{16}-TX	716
3GPP Band 17	CH_{16}-RX	746
3GPP Band 13	CH_{17}-TX	776
3GPP Band 13	CH_{17}-RX	746

TABLE 4-1 TEST FREQUENCIES FOR THE REFERENCE MEASUREMENT

Band	Frequency Designation	Frequency (MHz)
3GPP Band 13	CH_{18}-TX	781.5
3GPP Band 13	CH_{18}-RX	751.5
3GPP Band 13	CH_{19}-TX	787
3GPP Band 13	CH_{19}-RX	757
3GPP Band 14	CH_{20}-TX	788
3GPP Band 14	CH_{20}-RX	758
3GPP Band 14	CH_{21}-TX	793
3GPP Band 14	CH_{21}-RX	763
3GPP Band 14	CH_{22}-TX	798
3GPP Band 14	CH_{22}-RX	768
3GPP Band 26	CH_{29}-TX	814
3GPP Band 26	CH_{29}-RX	859
3GPP Band 26	CH_{30}-TX	831.5
3GPP Band 26	CH_{30}-RX	876.5
3GPP Band 26	CH_{31}-TX	849
3GPP Band 26	CH_{31}-RX	894
Cellular (3GPP Band 5)	CH_{1}-TX	824
Cellular (3GPP Band 5)	CH_{1}-RX	869
Cellular (3GPP Band 5)	CH_{2}-TX	836.5
Cellular (3GPP Band 5)	CH_{2}-RX	881.5
Cellular (3GPP Band 5)	CH_{3}-TX	849
Cellular (3GPP Band 5)	CH_{3}-RX	894
GPS	CH_{7}-RX	1575.42
PCS (3GPP Band 2)	CH_{4}-TX	1850
PCS (3GPP Band 2)	CH_{4}-RX	1930
PCS (3GPP Band 2)	CH_{5}-TX	1880
PCS (3GPP Band 2)	CH_{5}-RX	1960
PCS (3GPP Band 2)	CH_{6}-TX	1910
PCS (3GPP Band 2)	CH_{6}-RX	1990
3GPP Band 25	CH_{23}-TX	1850
3GPP Band 25	CH_{23}-RX	1930

TABLE 4-1 TEST FREQUENCIES FOR THE REFERENCE MEASUREMENT

Band	Frequency Designation	Frequency (MHz)
3GPP Band 25	CH_{24}-TX	1882.5
3GPP Band 25	CH_{24}-RX	1962.5
3GPP Band 25	CH_{25}-TX	1915
3GPP Band 25	CH_{25}-RX	1995
AWS-1 (3GPP Band 4)	CH_{8}-TX	1710
AWS-1 (3GPP Band 4)	CH_{8}-RX	2110
AWS-1 (3GPP Band 4)	CH_{9}-TX	1732.5
AWS-1 (3GPP Band 4)	CH_{9}-RX	2132.5
AWS-1 (3GPP Band 4)	CH_{10}-TX	1755
AWS-1 (3GPP Band 4)	CH_{10}-RX	2155
3GPP Band 41	CH_{26}-TX-RX	2496
3GPP Band 41	CH_{27}-TX-RX	2593
3GPP Band 41	CH_{28}-TX-RX	2690

4.4 Test Procedure

The range reference measurement is performed in a two-step process whereby the effects of the cables and equipment external to the normal operation of the range are removed from the resulting reference values. By performing the measurement in this manner, the measurement uncertainty is reduced, since the result relies on the linearity of the receiver rather than its absolute value accuracy. Additionally, measuring all components of the signal path at once results in only one measurement uncertainty contribution to the total measurement uncertainty of the path loss measurement; as opposed to measuring the loss of each component and combining them for a total loss, which increases the uncertainty by the square root of the number of measurements required.

4.4.1 Measurement Step 1: Source Reference Test (Cable Calibration)

The first step involves measuring the frequency response of all cabling, connectors, and equipment that are not a part of the test system. This step is normally only done once, provided all required test frequencies can be covered with one set of cables. If different cabling configurations are required for each polarization of the reference antenna, etc., this step must be repeated for each configuration. The two steps should be performed sequentially for each configuration to avoid additional uncertainty contributions due to changes in connections, etc.

For each configuration, perform the following steps:

1. Route the source cable(s) from the signal generator or output port of the network analyzer to the mounting location of the reference antenna. A minimum of 3 dB (preferably 10 dB) pad is recommended at the output (reference antenna side) of the cable to minimize standing waves. This output connection is defined as the reference port.
2. Connect the output of the source cable to the receiver or input port of the network analyzer, either directly (if the receiver can be moved to accommodate this connection) or through another cable (the loopback cable). An additional pad is recommended at the input port of the receiver or at the end of the loopback cable if used.
3. Ensure all equipment has been powered on long enough to have stabilized.
4. Perform a frequency scan or sweep to cover the required test frequencies and record the result. The power level of the signal source must remain fixed for all measurements. Ensure that the received signal is below the compression point of the receiver and any amplifiers or other components in the system (linear region) and sufficiently far above the noise floor of the receiver to account for the expected range path loss. It is recommended that all receivers be set to narrow bandwidth to obtain the lowest possible noise floor. Depending on the equipment used, refer to the following procedure:
    a. For a vector network analyzer, first record the swept frequency response curve with no calibration applied. This will be used for verifying that the analyzer is in the appropriate linear region (not overloaded) and has enough dynamic range. Perform a calibration of the analyzer to normalize out the response of the cable loop. This calibration will serve as the source reference test. While a full two-port calibration is desirable to provide the lowest measurement uncertainty and account for standing wave issues, etc., flexing of cables, movement of rotary joints, and other variations may make the calibration less accurate in practice. A through response normalization, while having a higher level of uncertainty specified by the manufacturer, may actually be more accurate in practice due to the cable variations involved. Refer to step 5 below for information on estimating these effects.
    b. For scalar swept frequency devices (scalar network analyzers, spectrum analyzers with tracking generators, etc.) record the swept frequency response curve of the cable loop. If the analyzer contains a scalar calibration or trace math function, it may be used to subtract this reference curve from subsequent measurements.
    c. For discrete signal generator and receiver combinations, tune the receiver and signal generator to each frequency and record the reading of the receiver.

Note: *For swept and list-based measurements using instruments such as network analyzers or spectrum analyzer/tracking generator combinations, care shall be taken to ensure that the measured (received) signal is tracking properly with the transmitted signal to avoid measuring*

larger losses than the actual path loss. Appendix N describes this phenomenon in more detail and provides recommended validation procedures.

5. Prior to proceeding to the next test step, move the cables around and monitor the frequency response. Any gross changes in response indicate bad cables or connections and should be rectified prior to continuing. Minor variations (fractions of a dB) are expected and should be accounted for in the measurement uncertainty of the reference measurement.
6. Record the measurement results to a file that can be imported into a Microsoft® Excel spreadsheet.

4.4.2 Measurement Step 2: Range Reference Test

The second step measures the frequency response of the reference antenna, range, and all cabling, connectors, switches, etc. between the reference port and the test port, as well as the cabling and equipment included in step 1. This step is required for each polarization of the receive antenna and for each separate signal path between the antenna under test (AUT) and any different test ports connecting to test equipment used for the EUT measurement. Only the paths used to record data (i.e., the paths to the receiver used for TRP measurements, or the output path from the communication tester for TIS measurements) need to be measured.

For each polarization and configuration, perform the following steps:

1. Connect the receiver or input port of the network analyzer to the test port connection to be characterized using the same cable configuration used to attach it to the reference port. Any cable adapters added or removed from the system to make the required connections must be accounted for as mentioned previously. Terminate any unused connections to the appropriate test equipment or by using 50 Ω loads.
2. Prior to connecting the source to the reference antenna, attach a 50 Ω termination to the reference port (or otherwise ensure no output from the signal generator) and record the noise floor of the analyzer or receiver at each frequency point. Use a frequency response sweep or discrete points as necessary based on the configuration. If available, use a max-hold function to obtain the maximum noise level for several sweeps.
3. Connect the reference antenna to the reference port and use a low dielectric support to hold the antenna in the middle of the quiet zone, boresight with the measurement antenna, and parallel to the polarization being characterized. For directional reference antennas, ensure that both the reference and measurement antennas are boresight to each other. Ensure that the support structure is out of the measurement path such that it has a minimal impact on the reference measurement.
4. Ensure all equipment has been powered on long enough to have stabilized. The equipment should normally have been left on from the cable calibration step. All settings of the equipment should be identical to those for the cable calibration. The power level of the signal generator must be the same as that for the reference sweep

(unless a vector network analyzer is used to obtain relative power data) and must remain stable over time in order to obtain valid data.

5. Perform a frequency scan or sweep to cover the required test frequencies and record the result. Ensure that the received signal is below the compression point of the receiver (linear region) and at least 20 dB above the noise floor as measured in step 2 above in order to have less than 1 dB measurement uncertainty due to the noise. Depending on the equipment used, refer to the following procedure:

   a. For a vector network analyzer, record a frequency response curve with the calibration applied. This curve is the desired range response measurement.

   b. For scalar swept frequency devices (scalar network analyzers, spectrum analyzers with tracking generators, etc.) record the swept frequency response curve of the cable loop. If the analyzer has been configured to automatically subtract the cable calibration reference curve, then the resulting curve is the desired range response measurement. If not, the resulting curve is the range response plus the cable contribution, which will be subtracted out later.

   c. For discrete signal generator and receiver combinations, tune the receiver and signal generator to each frequency and record the reading of the receiver. The resulting curve is the range response plus the cable contribution, which will be subtracted out later.

Note: *For swept and list-based measurements using instruments such as network analyzers or spectrum analyzer/tracking generator combinations, care shall be taken to ensure that the measured (received) signal is tracking properly with the transmitted signal to avoid measuring larger losses than the actual path loss. Appendix N describes this phenomenon in more detail and provides recommended validation procedures.*

6. Record the measurement results to a file that can be imported into a Microsoft® Excel spreadsheet.

4.4.3 Calculating the Range Reference Path Loss

Once the data has been acquired as described above, it's necessary to convert it to a loss value and combine it with the reference antenna gain in dBi to obtain the total path loss to be used as the reference correction. Once this value has been determined, it can be added to the power readings of the EUT test equipment to represent the reading relative to an isotropic source.

Use Equation 4.5 to determine the path loss. Table 4-2 shows a sample table for recording the data for one polarization and signal path. For data acquired using calibrated analyzers as described above, the frequency response curve generated by the second measurement is actually $P_{RX} - P_{RX}'$ in dB, so the negative of it represents a loss value. Subtracting that value from the reference antenna gain provides the total path loss. Work backwards as necessary to fill in the columns. Note that with calibration applied, the noise floor reference measurement will also have P_{RX}' subtracted from it. For vector network analyzers, all measured values are relative numbers, so the various reference values will be in dB rather than dBm.

TABLE 4-2 EXAMPLE RANGE REFERENCE MEASUREMENT DATA RECORD

Band	Frequency Designation	Frequency (MHz)	Cable Ref. (dBm)	Test Port (dBm)	Noise Floor (dBm)	Test Port - Cable (dB)	Test Port - Noise (dB)	Ref. Ant. Gain (dBi)	Path Loss (dB)
3GPP Band 12	CH_{11}-TX	699							
3GPP Band 12	CH_{11}-RX	729							
3GPP Band 12	CH_{12}-TX	707							
3GPP Band 12	CH_{12}-RX	737							
3GPP Band 12	CH_{13}-TX	716							
3GPP Band 12	CH_{13}-RX	746							
3GPP Band 17	CH_{14}-TX	704							
3GPP Band 17	CH_{14}-RX	734							
3GPP Band 17	CH_{15}-TX	710							
3GPP Band 17	CH_{15}-RX	740							
3GPP Band 17	CH_{16}-TX	716							
3GPP Band 17	CH_{16}-RX	746							
3GPP Band 13	CH_{17}-TX	776							
3GPP Band 13	CH_{17}-RX	746							
3GPP Band 13	CH_{18}-TX	781.5							
3GPP Band 13	CH_{18}-RX	751.5							
3GPP Band 13	CH_{19}-TX	787							
3GPP Band 13	CH_{19}-RX	757							
3GPP Band 14	CH_{20}-TX	788							
3GPP Band 14	CH_{20}-RX	758							
3GPP Band 14	CH_{21}-TX	793							
3GPP Band 14	CH_{21}-RX	763							
3GPP Band 14	CH_{22}-TX	798							
3GPP Band 14	CH_{22}-RX	768							
3GPP Band 26	CH_{29}-TX	814							
3GPP Band 26	CH_{29}-RX	859							
3GPP Band 26	CH_{30}-TX	831.5							
3GPP Band 26	CH_{30}-RX	876.5							
3GPP Band 26	CH_{31}-TX	849							
3GPP Band 26	CH_{31}-RX	894							
Cellular (3GPP Band 5)	CH_{1}-TX	824	-10.43	-57.78	-99.42	47.35	41.64	1.56	48.91
Cellular (3GPP Band 5)	CH_{1}-RX	869	-10.75	-59.46	-101.71	48.71	42.25	1.57	50.28

TABLE 4-2 EXAMPLE RANGE REFERENCE MEASUREMENT DATA RECORD

Band	Frequency Designation	Frequency (MHz)	Cable Ref. (dBm)	Test Port (dBm)	Noise Floor (dBm)	Test Port - Cable (dB)	Test Port - Noise (dB)	Ref. Ant. Gain (dBi)	Path Loss (dB)
Cellular (3GPP Band 5)	CH_2-TX	836.5	-11.12	-56.61	-98.3	45.49	41.69	1.57	47.06
Cellular (3GPP Band 5)	CH_2-RX	881.5	-11.21	-56.48	-97.64	45.27	41.16	1.54	46.81
Cellular (3GPP Band 5)	CH_3-TX	849	-11.43	-57.57	-99.93	46.14	42.36	1.49	47.63
Cellular (3GPP Band 5)	CH_3-RX	894	-11.47	-59.44	-96.52	47.97	37.08	1.45	49.42
GPS	CH_7-RX	1575.42							
PCS (3GPP Band 2)	CH_4-TX	1850	-15.72	-72.53	-102.42	56.81	29.89	1.85	58.66
PCS (3GPP Band 2)	CH_4-RX	1930	-15.91	-71.31	-100.9	55.4	29.59	1.88	57.28
PCS (3GPP Band 2)	CH_5-TX	1880	-16.2	-70.96	-97.71	54.76	26.75	1.91	56.67
PCS (3GPP Band 2)	CH_5-RX	1960	-16.12	-71.25	-103.61	55.13	32.36	1.84	56.97
PCS (3GPP Band 2)	CH_6-TX	1910	-16.35	-72.75	-102.09	56.4	29.34	1.79	58.19
PCS (3GPP Band 2)	CH_6-RX	1990	-16.41	-73.41	-98.9	57	25.49	1.71	58.71
3GPP Band 25	CH_{23}-TX	1850							
3GPP Band 25	CH_{23}-RX	1930							
3GPP Band 25	CH_{24}-TX	1882.5							
3GPP Band 25	CH_{24}-RX	1962.5							
3GPP Band 25	CH_{25}-TX	1915							
3GPP Band 25	CH_{25}-RX	1995							
AWS-1 (3GPP Band 4)	CH_8-TX	1710							
AWS-1 (3GPP Band 4)	CH_8-RX	2110							
AWS-1 (3GPP Band 4)	CH_9-TX	1732.5							
AWS-1 (3GPP Band 4)	CH_9-RX	2132.5							
AWS-1 (3GPP Band 4)	CH_{10}-TX	1755							
AWS-1 (3GPP Band 4)	CH_{10}-RX	2155							
3GPP Band 41	CH_{26}-TX-RX	2496							
3GPP Band 41	CH_{27}-TX-RX	2593							
3GPP Band 41	CH_{28}-TX-RX	2690							

4.5 Range Reference Measurement Data File

Data shall be supplied in a format accessible (i.e. readable) for additional examination and computation as outlined in Table 4-3.

TABLE 4-3 SAMPLE RANGE REFERENCE MEASUREMENT DATA FILE FORMAT

Measurement Date:			May 1, 2003						
Reference Antenna(s):			SD-1234 (Cell Band), SD-4567 (PCS Band)						
Polarization:			Theta						
Signal Path:			Theta Polarization to Spectrum Analyzer (TRP)						
Band	**Freq. Design.**	**Freq. (MHz)**	**Cable Ref. (dBm)**	**Test Port (dBm)**	**Noise Floor (dBm)**	**Test Port - Cable (dB)**	**Test Port - Noise (dB)**	**Ref. Ant. Gain (dBi)**	**Path Loss (dB)**
Cellular (3GPP Band 5)	CH_1-TX	824	-10.43	-57.78	-99.42	47.35	41.64	1.56	48.91
Cellular (3GPP Band 5)	CH_2-TX	836.5,	-10.75	-59.46	-101.71	48.71	42.25	1.57	50.28
Cellular (3GPP Band 5)	CH_3-TX	849	-11.12	-56.61	-98.30	45.49	41.69	1.57	47.06
PCS (3GPP Band 2)	CH_4-TX	1850	-15.72	-72.53	-102.42	56.81	29.89	1.85	58.66
PCS (3GPP Band 2)	CH_5-TX	1880	-15.91	-71.31	-100.90	55.40	29.59	1.88	57.28
PCS (3GPP Band 2)	CH_6-TX	1910	-16.20	-70.96	-97.71	54.76	26.75	1.91	56.67
Polarization:			Phi						
Signal Path:			Phi Polarization to Spectrum Analyzer (TRP)						

TABLE 4-3 SAMPLE RANGE REFERENCE MEASUREMENT DATA FILE FORMAT

Band	Freq. Design.	Freq. (MHz)	Cable Ref. (dBm)	Test Port (dBm)	Noise Floor (dBm)	Test Port - Cable (dB)	Test Port - Noise (dB)	Ref. Ant. Gain (dBi)	Path Loss (dB)
…	…	…	…	…	…	…	…	…	…
Polarization:			Theta						
Signal Path:			Theta Polarization to Communication Tester (TIS)						
Band	**Freq. Design.**	**Freq. (MHz)**	**Cable Ref. (dBm)**	**Test Port (dBm)**	**Noise Floor (dBm)**	**Test Port - Cable (dB)**	**Test Port - Noise (dB)**	**Ref. Ant. Gain (dBi)**	**Path Loss (dB)**
Cellular (3GPP Band 5)	CH_1-RX	869	-11.21	-56.48	-97.64	45.27	41.16	1.54	46.81
Cellular (3GPP Band 5)	CH_2-RX	881.5	-11.43	-57.57	-99.93	46.14	42.36	1.49	47.63
Cellular (3GPP Band 5)	CH_3-RX	894	-11.47	-59.44	-96.52	47.97	37.08	1.45	49.42
PCS (3GPP Band 2)	CH_4-RX	1930	-16.12	-71.25	-103.61	55.13	32.36	1.84	56.97
PCS (3GPP Band 2)	CH_5-RX	1960	-16.35	-72.75	-102.09	56.40	29.34	1.79	58.19
PCS (3GPP Band 2)	CH_6-RX	1990	-16.41	-73.41	-98.90	57.00	25.49	1.71	58.71
Polarization:			Phi						
Signal Path:			Phi Polarization to Communication Tester (TIS)						
Band	**Freq. Design.**	**Freq. (MHz)**	**Cable Ref. (dBm)**	**Test Port (dBm)**	**Noise Floor (dBm)**	**Test Port - Cable (dB)**	**Test Port - Noise (dB)**	**Ref. Ant. Gain (dBi)**	**Path Loss (dB)**
…	…	…	…	…	…	…	…	…	…

4.6 Alternate Scenarios

In some cases, it may be desirable to combine the transfer of a precision power calibration (i.e. using a reference power meter) to the measurement equipment along with the range reference measurement into one measurement step. This can have the advantage of reducing the total uncertainty that would be entailed in two separate measurement steps; one to perform the range reference and the second to transfer the power calibration. This section describes two possible scenarios envisioned for performing this type of transfer.

4.6.1 TRP Reference

By using the reference power meter for the reference measurement in step 4 of Section 4.4.1, the absolute power calibration of the reference power meter can be transferred to the measurement receiver used in Section 4.4.2, step 5. The delta between the two measurements now contains not only the path loss terms of the range reference measurement, but the deviation between the absolute power readings of the two instruments at their relative input levels. Note that this calibration transfer does not account for any non-linearity of the receiver(s) and is most accurate if the power level at the reference antenna is near the power level to be measured in the EUT.

4.6.2 TIS Reference

For TIS measurements, the desired measurement quantity is received power of the EUT at a given error rate. A one-step substitution measurement can be performed (assuming the power sensor can be attached directly to the reference antenna such that no additional cable loss need be accounted for) to transfer a received power calibration to the communication tester along with the range reference measurement. In this case, Section 4.4.1 can be skipped, and the system configured as in Section 4.4.2, with the power sensor now connected to the reference antenna and the communication tester transmitting through the signal path to be qualified. The signal strength is measured out of the reference antenna for a given output level of the base station and the resulting difference becomes the path loss correction for received power. Note that this calibration transfer does not account for any non-linearity of the communication's signal generator or the power meter. Ideally, the source power calibration is most accurate if the power level received at the reference antenna is near the sensitivity level of the EUT, although the sensitivity level of the power meter may have a larger contribution to the overall uncertainty in that case. Note also that the power meter and sensor must be suitable for measuring the active signal generated by the communication tester in order to perform this measurement.

If additional cabling is required to reach the power sensor, that additional cabling is first used to connect the power sensor to the output of the communication tester according to the steps in Section 4.4.1 before proceeding to the steps in Section 4.4.2.

4.6.3 Ripple Based Calibration

Since a single range path loss measurement receives the full error contribution due to any reflections within the test environment (chamber ripple), alternate methods that minimize this error contribution may be used to reduce the measurement uncertainty.

4.7 Wideband Channels

For technologies like WCDMA and LTE, where the channel bandwidths can be several MHz, correcting the path loss at only the center frequency may result in a measurement error when the channel is not perfectly flat. In addition, LTE TRP complicates matters further by offsetting the occupied bandwidth to different portions of the selected channel. Thus, the center frequency of the channel may not even be a frequency that is measured. This error can generally be measured and corrected for by using the power average of the path loss across the occupied bandwidth. The average should be performed on the net path loss, including contributions from all cables, reference antenna gain, and other components to properly capture all standing wave contributions or other factors that would result in a non-flat channel. The calibration data must be taken with sufficient resolution to capture the frequency variation of the channel.

In cases where it is not possible or practical to correct for the average power level in the channel, an additional uncertainty contribution must be included as specified in Appendix G.22. This generally requires a detailed understanding of the channel shape to properly estimate the measurement uncertainty, making it more practical to correct for the error rather than adding an uncertainty term. In addition, if the average power is not used, the center frequency of the occupied bandwidth should be used. If that is also not possible or practical, then an additional measurement uncertainty term must be applied to address the frequency offset of the correction. Finally, the TIS result does not directly follow the average channel power, but rather is biased higher (worse) due to the portion of the bandwidth that reaches sensitivity first and starts introducing errors. Current indications are that this contribution is small for the channel flatness expected from a typical antenna pattern measurement system, but an appropriate contribution may be estimated as well.

Section 5 Test Procedure—Radiated Power

Unless otherwise noted, all evaluations shall be performed in 'conversational' mode, at maximum transmit power.

Products supporting multiple air-interface technologies shall be tested in accordance with all relevant test procedures. Test results shall be provided for each test performed in the format defined.

It is recommended that one of the two following steps be taken to properly characterize the impact of transmit power drift due to thermal heating.

1. Perform the TRP test concurrently with the TIS test, except for LTE, where different resource block (RB) allocations are used for TRP and TIS.
2. Allow the phone to warm up by turning the transmitter to maximum power for 5 minutes prior to conducting the TRP test.

Please note the following abbreviations in this section:

FS = Free Space

BH = Beside Head (Head Phantom Only)

BHL = Beside Head Left Side (Head Phantom Only)

BHR = Beside Head Right Side (Head Phantom Only)

HL = Hand Left (Hand Phantom Only)

HR = Hand Right (Hand Phantom Only)

BHHL = Beside Head and Hand Left Side (Head and Hand Phantom)

BHHR = Beside Head and Hand Right Side (Head and Hand Phantom)

5.1 AMPS

This section removed for V3.1.

5.2 CDMA

5.2.1 Test Procedure

The measurement site and EUT shall be configured as specified in Appendix A. The power radiated by the EUT shall be measured using a calibrated and accurate RF measuring instrument (e.g., a spectrum analyzer, or measurement receiver, or power meter).

Note: *See Appendix D for power measurement considerations.*

The conducted power of the EUT shall also be measured at the antenna connector, if available, on all applicable frequencies. It is preferable that the EUT be the same as utilized for the TRP measurements. However, if the EUT does not readily support an antenna port for conducted measurements, a separate modified EUT may be provided for all conducted measurements. If no connector is available, the conducted power measurement is not required. Ideally, the power measurement will be performed with the same instrumentation in an equivalent configuration in order to minimize the measurement uncertainty involved. A different power measurement device may be used as long as any differences in absolute measurement accuracy are accounted for, either in corrections to the recorded power or increased reported measurement uncertainty for the conducted measurement. Refer to Appendix A.3 for more information on conducted power measurements and cabling setups.

The CDMA test parameters shall be set according to TIA-98-E paragraph 4.4.5 for the Maximum RF Output Power test and to the defaults specified in TIA-98-E paragraph 6.5.2 with the exceptions specified in Table 5-1, Table 5-2 or Table 5-3. The Radio Configuration may not be directly settable on certain test boxes. If that is the case, the Radio Configuration will be implicitly set by the Service Option setting. Page the EUT and direct it to a voice/ traffic channel. Adjust the Forward Link Power as needed to establish/maintain the voice/ traffic channel with an FER such that the transmitter is not gated off during power measurements.

TABLE 5-1 CDMA BASE STATION PARAMETERS—CELLULAR BAND

Parameter	Setting
Type	CDMA
Band Class	0
Channel (Reg.)	As needed[1]
SID	As needed[1]
NID	As needed[1]
Radio Configuration	1

TABLE 5-1 CDMA BASE STATION PARAMETERS—CELLULAR BAND

Parameter	Setting
Service Option	2 or 55
Rate	Full
Power Control	Always Up
Path Loss	See Table 4-2
Note 1: Registration channel, SID/NID are service provider-specific.	

TABLE 5-2 CDMA BASE STATION PARAMETERS—PCS BAND

Parameter	Setting
Type	CDMA
Band Class	1
Channel (Reg.)	As needed[1]
SID	As needed[1]
NID	As needed[1]
Radio Configuration	1
Service Option	2 or 55
Rate	Full
Power Control	Always Up
Path Loss	See Table 4-2
Note 1: Registration channel, SID/NID are service provider-specific.	

TABLE 5-3 CDMA BASE STATION PARAMETERS—AWS-1 BAND

Parameter	Setting
Type	CDMA
Band Class	15
Channel (Reg.)	As needed[1]
SID	As needed[1]
NID	As needed[1]

TABLE 5-3 CDMA BASE STATION PARAMETERS—AWS-1 BAND

Parameter	Setting
Radio Configuration	1
Service Option	2 or 55
Rate	Full
Power Control	Always Up
Path Loss	See Table 4-2
Note 1: Registration channel, SID/NID are service provider-specific.	

Tests shall be carried out for three different frequency pairs across the bands supported by the EUT (i.e., cellular, PCS and/or AWS-1), as defined in Table 5-4.

TABLE 5-4 CDMA TEST FREQUENCIES

Band	Channel Pair	Designation	Frequency (MHz)
CDMA 800 (Cellular)	1013	CH_1-TX	824.7
	1013	CH_1-RX	869.7
	384	CH_2-TX	836.52
	384	CH_2-RX	881.52
	777	CH_3-TX	848.31
	777	CH_3-RX	893.31
CDMA 1900 (PCS)	25	CH_4-TX	1851.25
	25	CH_4-RX	1931.25
	600	CH_5-TX	1880.00
	600	CH_5-RX	1960.00
	1175	CH_6-TX	1908.75
	1175	CH_6-RX	1988.75
CDMA 2100/1700 (AWS-1)	25	CH_8-TX	1711.25
	25	CH_8-RX	2111.25
	450	CH_9-TX	1732.5
	450	CH_9-RX	2132.5
	875	CH_{10}-TX	1753.75
	875	CH_{10}-RX	2153.75

Head and hand phantom, hand phantom only and/or free-space testing shall be conducted based on device type, as specified in Appendix O. Refer to Appendix C for head/hand testing requirements. Perform each test on all specified frequencies with the EUT antenna extended and retracted, as applicable.

5.2.2 Criteria

Results shall be reported as specified in Appendix B using the figures of merit given in Appendix B.2. Reports shall include results for free-space and head/hand configurations (if applicable) across all channels measured with the EUT antenna extended and retracted (if applicable).

TABLE 5-5 CDMA MINIMUM TRP LEVEL (IN DBM) REQUIREMENTS FOR THE PRIMARY MECHANICAL MODE[1]

Band	Device Held Up to Head for Voice (Yes/No)	Antenna Type	Device Power Class	FS	BHHL and BHHR	HL and HR
CDMA 800	Yes[2]	Embedded	I	25	TBD	TBD
			II	22	TBD	TBD
			III	18	TBD	TBD
		Stub or Retractable	I	27	TBD	TBD
			II	24	TBD	TBD
			III	20	TBD	TBD
	No[3]	All	I	27	N/A	N/A
			II	24	N/A	N/A
			III	20	N/A	N/A

TABLE 5-5 CDMA MINIMUM TRP LEVEL (IN DBM) REQUIREMENTS FOR THE PRIMARY MECHANICAL MODE[1]

Band	Device Held Up to Head for Voice (Yes/No)	Antenna Type	Device Power Class	FS	BHHL and BHHR	HL and HR
CDMA 1900	Yes[2]	Embedded	I	23	TBD	TBD
			II	18	TBD	TBD
			III	13	TBD	TBD
			IV	8	TBD	TBD
			V	3	TBD	TBD
		Stub or Retractable	I	25	TBD	TBD
			II	20	TBD	TBD
			III	15	TBD	TBD
			IV	10	TBD	TBD
			V	5	TBD	TBD
	No[3]	All	I	25	N/A	N/A
			II	20	N/A	N/A
			III	15	N/A	N/A
			IV	10	N/A	N/A
			V	5	N/A	N/A

TABLE 5-5 CDMA MINIMUM TRP LEVEL (IN DBM) REQUIREMENTS FOR THE PRIMARY MECHANICAL MODE[1]

Band	Device Held Up to Head for Voice (Yes/No)	Antenna Type	Device Power Class	FS	BHHL and BHHR	HL and HR
CDMA 2100/1700	Yes[2]	Embedded	I	22	TBD	TBD
			II	17	TBD	TBD
			III	12	TBD	TBD
			IV	7	TBD	TBD
			V	2	TBD	TBD
		Stub or Retractable	I	22	TBD	TBD
			II	17	TBD	TBD
			III	12	TBD	TBD
			IV	7	TBD	TBD
			V	2	TBD	TBD
	No[3]	All	I	22	N/A	N/A
			II	17	N/A	N/A
			III	12	N/A	N/A
			IV	7	N/A	N/A
			V	2	N/A	N/A

Note 1: Primary Mechanical Mode refers to device configured in preferred mode per manufacturer instructions (typically means antenna extended, fold or portrait slide open, but depends on form factor).

Note 2: "Yes" applies if the device supports voice operation in the talking position against the head in any cellular radio mode.

Note 3: "No" would be applicable to data-centric devices that are not held up against the head, e.g., embedded laptop solutions.

5.3 TDMA

This section removed for V3.1.

5.4 GSM

5.4.1 Test Procedure

The measurement site and EUT shall be configured as specified in Appendix A. The power radiated by the EUT shall be measured using a calibrated and accurate RF measuring instrument (e.g., a spectrum analyzer, measurement receiver, or power meter) capable of averaging across bursts.

Note: *See Appendix D for power measurement considerations.*

The conducted power of the EUT shall also be measured at the antenna connector, if available, on all applicable frequencies. It is preferable that the EUT be the same as utilized for the TRP measurements. However, if the EUT does not readily support an antenna port for conducted measurements, a separate modified EUT may be provided for all conducted measurements. If no connector is available, the conducted power measurement is not required. Ideally, the power measurement will be performed with the same instrumentation in an equivalent configuration in order to minimize the measurement uncertainty involved. A different power measurement device may be used as long as any differences in absolute measurement accuracy are accounted for, either in corrections to the recorded power or increased reported measurement uncertainty for the conducted measurement. Refer to Appendix A.3 for more information on conducted power measurements and cabling setups.

Using the settings in Table 5-6 or Table 5-7, page the EUT and direct it to a voice/traffic channel.

TABLE 5-6 PCL SETTING FOR GSM 850

Device Class	Setting
2	2
3	3
4	5
5	7

TABLE 5-7 PCL SETTING FOR GSM 1900

Device Class	Setting
1	0
2	3
3	30

Tests shall be performed for three different channels across the bands supported by the EUT, as defined in Table 5-8.

TABLE 5-8 GSM RX AND TX TEST FREQUENCIES

Band	Channel Pair	Designation	Frequency (MHz)
GSM 850 (Cellular)	128	CH_1-TX	824.20
	128	CH_1-RX	869.20
	190	CH_2-TX	836.60
	190	CH_2-RX	881.60
	251	CH_3-TX	848.80
	251	CH_3-RX	893.80
GSM 1900 (PCS)	512	CH_4-TX	1850.20
	512	CH_4-RX	1930.20
	661	CH_5-TX	1880.00
	661	CH_5-RX	1960.00
	810	CH_6-TX	1909.80
	810	CH_6-RX	1989.80

Head and hand phantom, hand phantom only and/or free-space testing shall be conducted based on device type, as specified in Appendix O. Refer to Appendix C for head/hand testing requirements. Perform each test on all specified frequencies with the EUT antenna extended and retracted, as applicable.

5.4.2 Criteria

Results shall be reported as specified in Appendix B using the figures of merit given in Appendix B.2. Reports shall include results for free-space and head/hand configurations (if applicable) across all channels measured with the EUT antenna extended and retracted (if applicable).

The limits in Table 5-9 are recommended.

TABLE 5-9 GSM MINIMUM TRP LEVEL (IN DBM) RECOMMENDED LIMITS FOR THE PRIMARY MECHANICAL MODE[1]

Band	Device Held Up to Head for Voice (Yes/No)	Device Power Class	FS	BHHL and BHHR	HL and HR[4]
GSM 850	Yes[2]	2	32	TBD	N/A
		3	30	TBD	N/A
		4	26	TBD	N/A
		5	22	TBD	N/A
	No[3]	2	32	N/A	N/A
		3	30	N/A	N/A
		4	26	N/A	N/A
		5	22	N/A	N/A
GSM 1900	Yes[2]	1	24.5	TBD	N/A
		2	18.5	TBD	N/A
		3	27.5	TBD	N/A
	No[3]	1	24.5	N/A	N/A
		2	18.5	N/A	N/A
		3	27.5	N/A	N/A

Note 1: Primary Mechanical Mode refers to device configured in preferred mode per manufacturer instructions (typically means antenna extended, fold or portrait slide open, but depends on form factor).

Note 2: "Yes" applies if the device supports voice operation in the talking position against the head in any cellular radio mode.

Note 3: "No" would be applicable to data-centric devices that are not held up against the head, e.g., embedded laptop solutions.

Note 4: GSM HL and HR tests are optional and are currently not a requirement of this Test Plan, but may be used for single and multiple offset point reference tests including GPRS/EGPRS.

Note: *Device Power shall comply with the power levels specified in the relevant industry standard(s).*

5.5 GPRS

5.5.1 Test Procedure

The measurement site and EUT shall be configured as specified in Appendix A. The power radiated by the EUT shall be measured using a calibrated and accurate RF measuring instrument (e.g., a spectrum analyzer, measurement receiver, or power meter) capable of averaging across bursts.

Note: *See Appendix D for power measurement considerations.*

The conducted power of the EUT shall also be measured at the antenna connector, if available, on all applicable frequencies. It is preferable that the EUT be the same as utilized for the TRP measurements. However, if the EUT does not readily support an antenna port for conducted measurements, a separate modified EUT may be provided for all conducted measurements. If no connector is available, the conducted power measurement is not required. Ideally, the power measurement will be performed with the same instrumentation in an equivalent configuration in order to minimize the measurement uncertainty involved. A different power measurement device may be used as long as any differences in absolute measurement accuracy are accounted for, either in corrections to the recorded power or increased reported measurement uncertainty for the conducted measurement. Refer to Appendix A.3 for more information on conducted power measurements and cabling setups.

Using the settings in Table 5-10, Table 5-11 and Table 5-12; establish a GPRS data loopback session between the EUT and a GPRS-capable base station simulator. Configure the GPRS base station simulator to direct the EUT to an appropriate packet traffic channel. During this test, the maximum number of uplink time slots supported by the EUT shall be utilized, and the uplink coding scheme should be CS-1.

TABLE 5-10 PCL AND GAMMA SETTING FOR GMSK MODULATION IN GSM 850 BAND

Device Class	PCL Setting	Gamma Setting
2	2	0
3	3	1
4	5	3
5	7	5

TABLE 5-11 PCL AND GAMMA SETTING FOR GMSK MODULATION IN GSM 1900 BAND

Device Class	PCL Setting	Gamma Setting
1	0	3
2	3	6
3	30	1

TABLE 5-12 CODING SCHEME (CS) SETTING FOR GMSK MODULATION IN EITHER GSM 850 OR GSM 1900 BAND

CS
1

Coding scheme CS-1 is the preferred setting for TRP measurements, as this provides the most robust channel coding to maintain the data loopback session. Coding schemes CS-2 through CS-4 can be utilized for TRP measurements only.

Tests shall be performed for three different channels across the bands supported by the EUT, as defined in Table 5-8.

Head and hand phantom, hand phantom only and/or free-space testing shall be conducted based on device type, as specified in Appendix O. Refer to Appendix C for head/hand testing requirements. Perform each test on all specified frequencies with the EUT antenna extended and retracted, as applicable.

Note: *Head-adjacent testing is only required for GPRS if the EUT supports usage against the head in this mode (e.g., VoIP).*

5.5.2 Criteria

Results shall be reported as specified in Appendix B using the figures of merit given in Appendix B.2. Reports shall include results for free-space and head/hand configurations (if applicable) across all channels measured with the EUT antenna extended and retracted (if applicable).

The limits in Table 5-13 are recommended.

TABLE 5-13 GPRS MINIMUM TRP LEVEL (IN DBM) RECOMMENDED LIMITS FOR THE PRIMARY MECHANICAL MODE[1 2]

Band	Device Held Up to Head for Voice (Yes/No)	Device Power Class	FS	BHHL and BHHR	HL and HR
GPRS 850	Yes[3]	2	32	TBD	TBD
		3	30	TBD	TBD
		4	26	TBD	TBD
		5	22	TBD	TBD
	No[4]	2	32	N/A	N/A
		3	30	N/A	N/A
		4	26	N/A	N/A
		5	22	N/A	N/A
GPRS 1900	Yes[3]	1	24.5	TBD	TBD
		2	18.5	TBD	TBD
		3	27.5	TBD	TBD
	No[4]	1	24.5	N/A	N/A
		2	18.5	N/A	N/A
		3	27.5	N/A	N/A

Note 1: Primary Mechanical Mode refers to device configured in preferred mode per manufacturer instructions (typically means antenna extended, fold or portrait slide open, but depends on form factor).

Note 2: The associated TRP value is based on measurements made with one uplink slot. Devices tested using two uplink time slots are allowed a TRP reduction of 3 dB, devices tested using three uplink slots are allowed a TRP reduction of up to 4.8 dB and devices tested using four uplink slots are allowed a TRP reduction of up to 6 dB. These allowances for uplink slot counts greater than one are based on an EUT capable of meeting the minimum TRP performance in single slot operation. This allowance is in alignment with 3GPP TS 45.005, Section 4.1.1, Table 4.1.-5.

Note 3: "Yes" applies if the device supports voice operation in the talking position against the head in any cellular radio mode.

Note 4: "No" would be applicable to data-centric devices that are not held up against the head, e.g., embedded laptop solutions.

Note: *Device Power shall comply with the power levels specified in the relevant industry standard(s).*

5.6 EGPRS

5.6.1 Test Procedure

The measurement site and EUT shall be configured as specified in Appendix A. The power radiated by the EUT shall be measured using a calibrated and accurate RF measuring instrument (e.g., a spectrum analyzer, measurement receiver, or power meter) capable of averaging across bursts.

Note: *See Appendix D for power measurement considerations.*

The conducted power of the EUT shall also be measured at the antenna connector, if available, on all applicable frequencies. It is preferable that the EUT be the same as utilized for the TRP measurements. However, if the EUT does not readily support an antenna port for conducted measurements, a separate modified EUT may be provided for all conducted measurements. If no connector is available, the conducted power measurement is not required. Ideally, the power measurement will be performed with the same instrumentation in an equivalent configuration in order to minimize the measurement uncertainty involved. A different power measurement device may be used as long as any differences in absolute measurement accuracy are accounted for, either in corrections to the recorded power or increased reported measurement uncertainty for the conducted measurement. Refer to Appendix A.3 for more information on conducted power measurements and cabling setups.

Using the settings in Table 5-14, Table 5-15 and Table 5-16; initiate a data loopback session between the EUT and an EGPRS-capable base station simulator. Configure the EGPRS base station simulator to direct the EUT to an appropriate packet traffic channel. During this test, the maximum uplink time slots supported by the EUT shall be utilized, and the uplink coding scheme should be MCS-5.

TABLE 5-14 PCL AND GAMMA SETTING FOR 8-PSK MODULATION (EDGE) IN GSM 850 BAND

Device Class	PCL Setting	Gamma Setting
E1	5	3
E2	8	6
E3	10	8

TABLE 5-15 PCL AND GAMMA SETTING FOR 8-PSK MODULATION (EDGE) IN GSM 1900 BAND

Device Class	PCL Setting	Gamma Setting
E1	0	3
E2	2	5
E3	4	7

TABLE 5-16 MODULATION CODING SCHEME (MCS) SETTING FOR 8-PSK MODULATION (EDGE) IN EITHER GSM 850 OR GSM 1900 BAND

MCS
5

Modulation coding scheme MCS 5 is the preferred setting for TRP measurements, as this provides the most robust channel coding to maintain the data session. MCS 6 through MSC 9 can be utilized for TRP measurements only.

Tests shall be performed for three different channels across the bands supported by the EUT, as defined in Table 5-8.

Head and hand phantom, hand phantom only and/or free-space testing shall be conducted based on device type, as specified in Appendix O. Refer to Appendix C for head/hand testing requirements. Perform each test on all specified frequencies with the EUT antenna extended and retracted, as applicable.

Note: *Head-adjacent testing is only required for EGPRS if the EUT supports usage against the head in this mode (e.g., VoIP).*

5.6.2 Criteria

Results shall be reported as specified in Appendix B using the figures of merit given in Appendix B.2. Reports shall include results for free-space and head/hand configurations (if applicable) across all channels measured with the EUT antenna extended and retracted (if applicable).

The limits in Table 5-17 are recommended.

TABLE 5-17 EGPRS MINIMUM TRP LEVEL (IN DBM) RECOMMENDED LIMITS FOR THE PRIMARY MECHANICAL MODE[1] [2]

Band	Device Held Up to Head for Voice (Yes/No)	Device Power Class	FS	BHHL and BHHR	HL and HR
EGPRS 850	Yes[3]	E1	26	TBD	TBD
		E2	20	TBD	TBD
		E3	16	TBD	TBD
	No[4]	E1	26	N/A	N/A
		E2	20	N/A	N/A
		E3	16	N/A	N/A
EGPRS 1900	Yes[3]	E1	24.5	TBD	TBD
		E2	20.5	TBD	TBD
		E3	16.5	TBD	TBD
	No[4]	E1	24.5	N/A	N/A
		E2	20.5	N/A	N/A
		E3	16.5	N/A	N/A

Note 1: Primary Mechanical Mode refers to device configured in preferred mode per manufacturer instructions (typically means antenna extended, fold or portrait slide open, but depends on form factor).

Note 2: The associated TRP value is based on measurements made with one or two uplink slots. Devices tested using three uplink slots are allowed a TRP reduction of up to 1.8 dB and devices tested using four uplink slots are allowed a TRP reduction of up to 3 dB. These allowances for uplink slot counts greater than two are based on an EUT capable of meeting the minimum TRP performance in single or dual-slot operation.

Note 3: "Yes" applies if the device supports voice operation in the talking position against the head in any cellular radio mode.

Note 4: "No" would be applicable to data-centric devices that are not held up against the head, e.g., embedded laptop solutions.

Note: *Device Power shall comply with the power levels specified in the relevant industry standard(s).*

5.7 UMTS (W-CDMA)

5.7.1 Test Procedure

The measurement site and EUT shall be configured as specified in Appendix A. The power radiated by the EUT shall be measured using a calibrated and accurate RF measuring instrument (e.g., a spectrum analyzer, or measurement receiver, or power meter).

Note: *See Appendix D for power measurement considerations.*

The conducted power of the EUT shall also be measured at the antenna connector, if available, on all applicable frequencies. It is preferable that the EUT be the same as utilized for the TRP measurements. However, if the EUT does not readily support an antenna port for conducted measurements, a separate modified EUT may be provided for all conducted measurements. If no connector is available, the conducted power measurement is not required. Ideally, the power measurement will be performed with the same instrumentation in an equivalent configuration in order to minimize the measurement uncertainty involved. A different power measurement device may be used as long as any differences in absolute measurement accuracy are accounted for, either in corrections to the recorded power or increased reported measurement uncertainty for the conducted measurement. Refer to Appendix A.3 for more information on conducted power measurements and cabling setups.

The UMTS system simulator shall be set up according to 3GPP TS 34.121-1, Section 5.2 (Maximum Output Power test) using the defaults specified in 3GPP TS 34.121, 3GPP TS 34.108 and 3GPP TS 34.109, as applicable. Using the Generic Call Setup procedures described in 3GPP TS 34.108 Section 7, page the EUT and place it into the loopback mode as described in 3GPP TS 34.109 Section 5.3. During this test, ensure that the System Simulator is continuously sending “up power” commands as described in 3GPP TS 34.121-1, Section 5.2.4.2.

Tests shall be performed for three different channels across the bands supported by the EUT, as defined in Table 5-18.

TABLE 5-18 UMTS RX AND TX TEST FREQUENCIES

Band	Channel Pair (UARFCN)	Designation	Frequency (MHz)
UMTS 850 (3GPP BAND V)	4132	CH_1-TX	826.40
	4357	CH_1-RX	871.40
	4183	CH_2-TX	836.60
	4408	CH_2-RX	881.60
	4233	CH_3-TX	846.60
	4458	CH_3-RX	891.60
UMTS 1900 (3GPP BAND II)	9262	CH_4-TX	1852.40
	9662	CH_4-RX	1932.40
	9400	CH_5-TX	1880.00
	9800	CH_5-RX	1960.00
	9538	CH_6-TX	1907.60
	9938	CH_6-RX	1987.60
UMTS 2100/1700 (3GPP BAND IV)	1312	CH_8-TX	1712.40
	1537	CH_8-RX	2112.40
	1413	CH_9-TX	1732.60
	1638	CH_9-RX	2132.60
	1513	CH_{10}-TX	1752.60
	1738	CH_{10}-RX	2152.60

Head and hand phantom, hand phantom only and/or free-space testing shall be conducted based on device type, as specified in Appendix O. Refer to Appendix C for head/hand testing requirements. Perform each test on all specified frequencies with the EUT antenna extended and retracted, as applicable.

5.7.2 Criteria

Results shall be reported as specified in Appendix B using the figures of merit given in Appendix B.2. Reports shall include results for free-space and head/hand configurations (if applicable) across all channels measured with the EUT antenna extended and retracted (if applicable).

The limits in Table 5-19 are recommended.

TABLE 5-19 UMTS MINIMUM TRP LEVEL (IN DBM) RECOMMENDED LIMITS FOR THE PRIMARY MECHANICAL MODE[1]

Band	Device Held Up to Head for Voice (Yes/No)	Device Power Class	FS	BHHL and BHHR	HL and HR
UMTS 850	Yes[2]	3	17	TBD	TBD
		4	14	TBD	TBD
	No[3]	3	17	N/A	N/A
		4	14	N/A	N/A
UMTS 1900	Yes[2]	3	18.5	TBD	TBD
		4	15.5	TBD	TBD
	No[3]	3	18.5	N/A	N/A
		4	15.5	N/A	N/A
UMTS 2100/ 1700	Yes[2]	3	19.5	TBD	TBD
		4	16.5	TBD	TBD
	No[3]	3	19.5	N/A	N/A
		4	16.5	N/A	N/A

Note 1: Primary Mechanical Mode refers to device configured in preferred mode per manufacturer instructions (typically means antenna extended, fold or portrait slide open, but depends on form factor).

Note 2: "Yes" applies if the device supports voice operation in the talking position against the head in any cellular radio mode.

Note 3: "No" would be applicable to data-centric devices that are not held up against the head, e.g., embedded laptop solutions.

Note: *Device Power shall comply with the power levels specified in the relevant industry standard(s).*

5.8 LTE

5.8.1 Test Procedure

The measurement site and EUT shall be configured as specified in Appendix A. The power radiated by the EUT shall be measured using a calibrated and accurate RF measuring instrument (e.g., a spectrum analyzer, or measurement receiver, or power meter).

Note: *See Appendix D for power measurement considerations.*

The conducted power of the EUT shall also be measured at the antenna connector, if available, on all frequencies and resource block (RB) allocations defined for the radiated testing. It is preferable that the EUT utilized for conducted power measurements be the same EUT as that utilized for radiated TRP measurements. However, if the EUT does not readily support an antenna port for conducted measurements, a separate modified EUT of the same model and version may be provided for all conducted measurements. If no connector is available, the conducted power measurement is not required. Ideally, the EUT's conducted power measurement will be performed using the same instrumentation as that used to measure the EUT's radiated performance (in an equivalent configuration) to minimize the measurement uncertainty involved. A different power measurement device may be used as long as any differences in absolute measurement accuracy are accounted for, either in corrections to the recorded power or increased reported measurement uncertainty for the conducted measurement. Refer to Appendix A.3 for more information on conducted power measurements and cabling setups.

The LTE system simulator and EUT shall be configured per 3GPP TS 36.521-1, Section 6.2 (UE Maximum Output Power) using the default settings specified in 3GPP TS 36.521-1 and 3GPP TS 36.508 as applicable. The test procedure in section 6.2 of 3GPP TS 36.521-1 shall be used to measure the UE output power.

Tests shall be carried out for different frequency pairs (FDD; UL -uplink /DL -downlink) or frequencies (TDD) and RB allocations across the bands supported by the EUT, as defined in Table 5-20.

TABLE 5-20 LTE TRP MEASUREMENTS TABLE FOR THE PRIMARY MECHANICAL MODE[1]

Band	Channel Bandwidth (MHz)	Channel	Designation	TX Frequency (MHz) [center of UL RB allocation]	UL RB Allocation	DL RB Allocation
2[2]	10	18650	CH_4-TX	1851.58	12 RB with RBstart=0	None, control only[3]
	10	18900	CH_5-TX	1880	12 RB with RBstart=19	None, control only[3]
	10	19150	CH_6-TX	1908.42	12 RB with RBstart=38	None, control only[3]

TABLE 5-20 LTE TRP MEASUREMENTS TABLE FOR THE PRIMARY MECHANICAL MODE[1]

Band	Channel Bandwidth (MHz)	Channel	Designation	TX Frequency (MHz) [center of UL RB allocation]	UL RB Allocation	DL RB Allocation
4	10	20000	CH_8-TX	1711.58	12 RB with RBstart=0	None, control only[3]
	10	20175	CH_9-TX	1732.5	12 RB with RBstart=19	None, control only[3]
	10	20350	CH_{10}-TX	1753.42	12 RB with RBstart=38	None, control only[3]
5[4]	10	20450	CH_1-TX	825.58	12 RB with RBstart=0	None, control only[3]
	10	20525	CH_2-TX	836.5	12 RB with RBstart=19	None, control only[3]
	10	20600	CH_3-TX	847.42	12 RB with RBstart=38	None, control only[3]
12	10	23060	CH_{11}-TX	700.58	12 RB with RBstart=0	None, control only[3]
	10	23095	CH_{12}-TX	707.5	12 RB with RBstart=19	None, control only[3]
	10	23130	CH_{13}-TX	714.42	12 RB with RBstart=38	None, control only[3]
13	10	23230	CH_{17}-TX	778.58	12 RB with RBstart=0	None, control only[3]
	10	23230	CH_{18}-TX	782	12 RB with RBstart=19	None, control only[3]
	10	23230	CH_{19}-TX	785.42	12 RB with RBstart=38	None, control only[3]
14	10	23330	CH_{20}-TX	789.58	12 RB with RBstart=0	None, control only[3]
	10	23330	CH_{21}-TX	793	12 RB with RBstart=19	None, control only[3]
	10	23330	CH_{22}-TX	796.42	12 RB with RBstart=38	None, control only[3]
17	10	23780	CH_{14}-TX	705.58	12 RB with RBstart=0	None, control only[3]
	10	23790	CH_{15}-TX	710	12 RB with RBstart=19	None, control only[3]
	10	23800	CH_{16}-TX	714.42	12 RB with RBstart=38	None, control only[3]
25[2]	5	26065	CH_{23}-TX	1850.97	8 RB with RBstart=0	None, control only[3]
	5	26365	CH_{24}-TX	1882.41	8 RB with RBstart=8	None, control only[3]
	5	26665	CH_{25}-TX	1914.03	8 RB with RBstart=17	None, control only[3]
26[4]	5	26715	CH_{29}-TX	814.97	8 RB with RBstart=0	None, control only[3]
	5	26865	CH_{30}-TX	831.41	8 RB with RBstart=8	None, control only[3]
	5	27015	CH_{31}-TX	848.03	8 RB with RBstart=17	None, control only[3]

TABLE 5-20 LTE TRP MEASUREMENTS TABLE FOR THE PRIMARY MECHANICAL MODE[1]

Band	Channel Bandwidth (MHz)	Channel	Designation	TX Frequency (MHz) [center of UL RB allocation]	UL RB Allocation	DL RB Allocation
41	20	39750	CH_{26}-TX-RX	2498.62	18 RB with RBstart=0	None, control only[3]
	20	40620	CH_{27}-TX-RX	2593	18 RB with RBstart=41	None, control only[3]
	20	41490	CH_{28}-TX-RX	2687.38	18 RB with RBstart=82	None, control only[3]

Note 1: Primary Mechanical Mode refers to device configured in preferred mode per manufacturer instructions (typically means antenna extended, fold or portrait slide open, but depends on form factor).

Note 2: If the device supports Band 25 and Band 2, then testing is only required to be completed in Band 25. The test requirements and data comparison between Bands 2 and 25 will not be directly comparable due to the usage of different RF channel bandwidths.

Note 3: As per 3GPP TS 36.521-1, Section 6.2 (UE Maximum Output Power)

Note 4: If the device supports Band 26 and Band 5, then testing is only required to be completed in Band 26. The test requirements and data comparison between Bands 5 and 26 will not be directly comparable due to the usage of different RF channel bandwidths.

Head and hand phantom, hand phantom only and/or free-space testing shall be conducted based on device type, as specified in Appendix O. Refer to Appendix C for head/hand testing requirements. Perform each test on all specified frequencies and RB allocations with the EUT antenna extended and retracted, as applicable.

Note: *Head-adjacent testing is only required for LTE if the EUT supports usage against the head while utilizing an LTE airlink (e.g., VoIP).*

5.8.2 Criteria

Results shall be reported as specified in Appendix B using the figures of merit given in Appendix B.2. Reports shall include results for free-space and head/hand configurations (if applicable) across all channels and RB allocations measured with the EUT in primary mechanical mode, and (if applicable) in secondary mechanical modes as reference information.

TABLE 5-21 LTE TRP CRITERIA TABLE FOR THE PRIMARY MECHANICAL MODE[1]

Band	Device Held to Head for Voice	Free Space	BHHL and BHHR	HL and HR
LTE Band 12	Yes[2]	TBD	TBD	TBD
	No[3]	TBD	N/A	N/A
LTE Band 17	Yes[2]	TBD	TBD	TBD
	No[3]	TBD	N/A	N/A
LTE Band 13	Yes[2]	TBD	TBD	TBD
	No[3]	TBD	N/A	N/A
LTE Band 14	Yes[2]	TBD	TBD	TBD
	No[3]	TBD	N/A	N/A
LTE Band 26	Yes[2]	TBD	TBD	TBD
	No[3]	TBD	N/A	N/A
LTE Band 5	Yes[2]	TBD	TBD	TBD
	No[3]	TBD	N/A	N/A
LTE Band 2	Yes[2]	TBD	TBD	TBD
	No[3]	TBD	N/A	N/A
LTE Band 25	Yes[2]	TBD	TBD	TBD
	No[3]	TBD	N/A	N/A
LTE Band 4	Yes[2]	TBD	TBD	TBD
	No[3]	TBD	N/A	N/A
LTE Band 41	Yes[2]	TBD	TBD	TBD
	No[3]	TBD	N/A	N/A

Note 1: Primary Mechanical Mode refers to device configured in preferred mode per manufacturer instructions (typically means antenna extended, fold or portrait slide open, but depends on form factor).

Note 2: “Yes” applies if the device supports voice operation in the talking position against the head in any cellular radio mode.

Note 3: “No” would be applicable to data-centric devices that are not held up against the head, e.g., embedded laptop solutions.

5.9 CDMA 1xEV-DO DATA

5.9.1 Test Procedure

The measurement site and EUT shall be configured as specified in Appendix A. The power radiated by the EUT shall be measured using a calibrated and accurate RF measuring instrument (e.g., a spectrum analyzer, or measurement receiver, or power meter).

Note: *See Appendix D for power measurement considerations.*

The conducted power of the EUT shall also be measured at the antenna connector, if available, on all applicable frequencies. It is preferable that the EUT be the same as utilized for the TRP measurements. However, if the EUT does not readily support an antenna port for conducted measurements, a separate modified EUT may be provided for all conducted measurements. If no connector is available, the conducted power measurement is not required. Ideally, the power measurement will be performed with the same instrumentation in an equivalent configuration in order to minimize the measurement uncertainty involved. A different power measurement device may be used as long as any differences in absolute measurement accuracy are accounted for, either in corrections to the recorded power or increased reported measurement uncertainty for the conducted measurement. Refer to Appendix A.3 for more information on conducted power measurements and cabling setups.

If the EUT supports 1xEV-DO Rev. A, then 1xEV-DO Rev. A shall be used for this test. The CDMA 1xEV-DO test parameters shall be set according to TIA-866-A paragraph 4.3.4 (subtype 2 physical layer) for the Maximum RF Output Power test and to the applicable defaults specified in TIA-866-A section 8, with the exceptions specified in Table 5-22 through Table 5-24.

If the EUT does not support 1xEV-DO Rev. A, then 1xEV-DO Rev. 0 shall be used for this test and the CDMA 1xEV-DO test parameters shall be set according to TIA-866-1 paragraph 3.1.2.3.4 for the Maximum RF Output Power test, and to the applicable defaults specified in TIA-866-1 section 11 with the exceptions specified in Table 5-22 through Table 5-24.

Page the EUT and direct it to a traffic channel. Adjust the Forward Link Power as needed to establish/maintain the traffic channel with a PER such that the transmitter is not gated off during power measurements.

TABLE 5-22 CDMA 1XEV-DO BASE STATION PARAMETERS - CELLULAR BAND

Parameter	Setting
Band Class	0
Channel (Reg.)	As needed[1]
Power Control	Always Up
Path Loss	See Table 4-2
Note 1: Registration channel is service provider-specific.	

TABLE 5-23 CDMA 1XEV-DO BASE STATION PARAMETERS - PCS BAND

Parameter	Setting
Band Class	1
Channel (Reg.)	As needed[1]
Power Control	Always Up
Path Loss	See Table 4-2
Note 1: Registration channel is service provider-specific.	

TABLE 5-24 CDMA 1XEV-DO BASE STATION PARAMETERS - AWS-1 BAND

Parameter	Setting
Band Class	15
Channel (Reg.)	As needed[1]
Power Control	Always Up
Path Loss	See Table 4-2
Note 1: Registration channel is service provider-specific.	

Tests shall be carried out for three different frequency pairs across the bands supported by the EUT (i.e., cellular, PCS and/or AWS-1), as defined in Table 5-4.

Head and hand phantom, hand phantom only and/or free-space testing shall be conducted based on device type, as specified in Appendix O. Refer to Appendix C for head/hand testing

requirements. Perform each test on all specified frequencies with the EUT antenna extended and retracted, as applicable.

Note: *That head-adjacent testing is only required for CDMA 1xEV-DO data if the EUT supports usage against the head in this mode (e.g., VoIP).*

5.9.2 Criteria

Results shall be reported as specified in Appendix B using the figures of merit given in Appendix B.2. Reports shall include results for free-space and head/hand configurations (if applicable) across all channels measured with the EUT antenna extended and retracted (if applicable).

TABLE 5-25 CDMA 1XEV-DO DATA MINIMUM TRP LEVEL (IN DBM) REQUIREMENTS FOR THE PRIMARY MECHANICAL MODE[1]

Band	Device Held Up to Head for Voice (Yes/No)	Antenna Type	Device Power Class	FS	BHHL and BHHR	HL and HR
CDMA 1xEV-DO DATA 800	Yes[2]	Embedded	I	25	TBD	TBD
			II	22	TBD	TBD
			III	18	TBD	TBD
		Stub or Retractable	I	27	TBD	TBD
			II	24	TBD	TBD
			III	20	TBD	TBD
	No[3]	All	I	27	N/A	N/A
			II	24	N/A	N/A
			III	20	N/A	N/A

TABLE 5-25 CDMA 1XEV-DO DATA MINIMUM TRP LEVEL (IN DBM) REQUIREMENTS FOR THE PRIMARY MECHANICAL MODE[1]

Band	Device Held Up to Head for Voice (Yes/No)	Antenna Type	Device Power Class	FS	BHHL and BHHR	HL and HR
CDMA 1xEV-DO DATA 1900	Yes[2]	Embedded	I	23	TBD	TBD
			II	18	TBD	TBD
			III	13	TBD	TBD
			IV	8	TBD	TBD
			V	3	TBD	TBD
		Stub or Retractable	I	25	TBD	TBD
			II	20	TBD	TBD
			III	15	TBD	TBD
			IV	10	TBD	TBD
			V	5	TBD	TBD
	No[3]	All	I	25	N/A	N/A
			II	20	N/A	N/A
			III	15	N/A	N/A
			IV	10	N/A	N/A
			V	5	N/A	N/A

TABLE 5-25 CDMA 1XEV-DO DATA MINIMUM TRP LEVEL (IN DBM) REQUIREMENTS FOR THE PRIMARY MECHANICAL MODE[1]

Band	Device Held Up to Head for Voice (Yes/No)	Antenna Type	Device Power Class	FS	BHHL and BHHR	HL and HR
CDMA 1xEV-DO DATA 2100/1700	Yes[2]	Embedded	I	22	TBD	TBD
			II	17	TBD	TBD
			III	12	TBD	TBD
			IV	7	TBD	TBD
			V	2	TBD	TBD
		Stub or Retractable	I	22	TBD	TBD
			II	17	TBD	TBD
			III	12	TBD	TBD
			IV	7	TBD	TBD
			V	2	TBD	TBD
	No[3]	All	I	22	N/A	N/A
			II	17	N/A	N/A
			III	12	N/A	N/A
			IV	7	N/A	N/A
			V	2	N/A	N/A

Note 1: Primary Mechanical Mode refers to device configured in preferred mode per manufacturer instructions (typically means antenna extended, fold or portrait slide open, but depends on form factor).

Note 2: "Yes" applies if the device supports voice operation in the talking position against the head in any cellular radio mode.

Note 3: "No" would be applicable to data-centric devices that are not held up against the head, e.g., embedded laptop solutions.

Note: *Device Power shall comply with the power levels specified in the relevant industry standard(s).*

5.10 CDMA 1xRTT DATA

5.10.1 Test Procedure

The measurement site and EUT shall be configured as specified in Appendix A. The power radiated by the EUT shall be measured using a calibrated and accurate RF measuring instrument (e.g., a spectrum analyzer, or measurement receiver, or power meter).

Note: *See Appendix D for power measurement considerations.*

The conducted power of the EUT shall also be measured at the antenna connector, if available, on all applicable frequencies. It is preferable that the EUT be the same as utilized for the TRP measurements. However, if the EUT does not readily support an antenna port for conducted measurements, a separate modified EUT may be provided for all conducted measurements. If no connector is available, the conducted power measurement is not required. Ideally, the power measurement will be performed with the same instrumentation in an equivalent configuration in order to minimize the measurement uncertainty involved. A different power measurement device may be used as long as any differences in absolute measurement accuracy are accounted for, either in corrections to the recorded power or increased reported measurement uncertainty for the conducted measurement. Refer to Appendix A.3 for more information on conducted power measurements and cabling setups.

The CDMA test parameters shall be set according to TIA-98-E paragraph 4.4.5 for the Reverse Fundamental Channel Maximum RF Output Power test and to the defaults specified in TIA-98-E paragraph 6.5.2 with the exceptions specified in Table 5-26 through Table 5-28. The Radio Configuration may not be directly settable on certain test boxes. If that is the case, the Radio Configuration will be implicitly set by the Service Option setting. Page the EUT and direct it to a traffic channel. Adjust the Forward Link Power as needed to establish/maintain the traffic channel with an FER such that the transmitter is not gated off during power measurements.

TABLE 5-26 CDMA BASE STATION PARAMETERS - CELLULAR BAND

Parameter	Setting
Type	CDMA
Band Class	0
Channel (Reg.)	As needed[1]
SID	As needed[1]
NID	As needed[1]
Radio Configuration	3
Service Option	32
Rate	Full
Power Control	Always Up
Path Loss	See Table 4-2
Note 1: Registration channel, SID/NID are service provider-specific.	

TABLE 5-27 CDMA BASE STATION PARAMETERS - PCS BAND

Parameter	Setting
Type	CDMA
Band Class	1
Channel (Reg.)	As needed[1]
SID	As needed[1]
NID	As needed[1]
Radio Configuration	3
Service Option	32
Rate	Full
Power Control	Always Up
Path Loss	See Table 4-2
Note 1: Registration channel, SID/NID are service provider-specific.	

TABLE 5-28 CDMA BASE STATION PARAMETERS - AWS-1 BAND

Parameter	Setting
Type	CDMA
Band Class	15
Channel (Reg.)	As needed[1]
SID	As needed[1]
NID	As needed[1]
Radio Configuration	3
Service Option	32
Rate	Full
Power Control	Always Up
Path Loss	See Table 4-2
Note 1: Registration channel, SID/NID are service provider-specific.	

Tests shall be carried out for three different frequency pairs across the bands supported by the EUT (i.e., cellular, PCS and/or AWS-1), as defined in Table 5-4.

Head and hand phantom, hand phantom only and/or free-space testing shall be conducted based on device type, as specified in Appendix O. Refer to Appendix C for head/hand testing requirements. Perform each test on all specified frequencies with the EUT antenna extended and retracted, as applicable.

Note: *Head-adjacent testing is only required for CDMA 1xRTT data if the EUT supports usage against the head in this mode (e.g., VoIP).*

5.10.2 Criteria

Results shall be reported as specified in Appendix B using the figures of merit given in Appendix B.2. Reports shall include results for free-space and head/hand configurations (if applicable) across all channels measured with the EUT antenna extended and retracted (if applicable).

TABLE 5-29 CDMA 1XRTT DATA MINIMUM TRP LEVEL (IN DBM) REQUIREMENTS FOR THE PRIMARY MECHANICAL MODE[1]

Band	Device Held Up to Head for Voice (Yes/No)	Antenna Type	Device Power Class	FS	BHHL and BHHR	HL and HR
CDMA 1xRTT DATA 800	Yes[2]	Embedded	I	25	TBD	TBD
			II	22	TBD	TBD
			III	18	TBD	TBD
		Stub or Retractable	I	27	TBD	TBD
			II	24	TBD	TBD
			III	20	TBD	TBD
	No[3]	All	I	27	N/A	N/A
			II	24	N/A	N/A
			III	20	N/A	N/A

TABLE 5-29 CDMA 1XRTT DATA MINIMUM TRP LEVEL (IN DBM) REQUIREMENTS FOR THE PRIMARY MECHANICAL MODE[1]

Band	Device Held Up to Head for Voice (Yes/No)	Antenna Type	Device Power Class	FS	BHHL and BHHR	HL and HR
CDMA 1xRTT DATA 1900	Yes[2]	Embedded	I	23	TBD	TBD
			II	18	TBD	TBD
			III	13	TBD	TBD
			IV	8	TBD	TBD
			V	3	TBD	TBD
		Stub or Retractable	I	25	TBD	TBD
			II	20	TBD	TBD
			III	15	TBD	TBD
			IV	10	TBD	TBD
			V	5	TBD	TBD
	No[3]	All	I	25	N/A	N/A
			II	20	N/A	N/A
			III	15	N/A	N/A
			IV	10	N/A	N/A
			V	5	N/A	N/A

TABLE 5-29 CDMA 1XRTT DATA MINIMUM TRP LEVEL (IN DBM) REQUIREMENTS FOR THE PRIMARY MECHANICAL MODE[1]

Band	Device Held Up to Head for Voice (Yes/No)	Antenna Type	Device Power Class	FS	BHHL and BHHR	HL and HR
CDMA 1xRTT DATA 2100/1700	Yes[2]	Embedded	I	22	TBD	TBD
			II	17	TBD	TBD
			III	12	TBD	TBD
			IV	7	TBD	TBD
			V	2	TBD	TBD
		Stub or Retractable	I	22	TBD	TBD
			II	17	TBD	TBD
			III	12	TBD	TBD
			IV	7	TBD	TBD
			V	2	TBD	TBD
	No[3]	All	I	22	N/A	N/A
			II	17	N/A	N/A
			III	12	N/A	N/A
			IV	7	N/A	N/A
			V	2	N/A	N/A

Note 1: Primary Mechanical Mode refers to device configured in preferred mode per manufacturer instructions (typically means antenna extended, fold or portrait slide open, but depends on form factor).

Note 2: "Yes" applies if the device supports voice operation in the talking position against the head in any cellular radio mode.

Note 3: "No" would be applicable to data-centric devices that are not held up against the head, e.g., embedded laptop solutions.

Note: *Device Power shall comply with the power levels specified in the relevant industry standard(s).*

5.11 Alternate Test Procedure for TRP

This alternate test procedure significantly reduces the test time for TRP for multi-protocol phones, which have more than one protocol in the same frequency band. This alternate test procedure can be used to determine the offset in TRP between different protocols on equivalent channels. "Equivalent channels" assumes that the two channels are close enough in frequency that the pattern does not change. A single point offset test or a multi-point offset test may be used.

It is recommended that voice digital protocols be given priority when doing full TRP measurements. For purposes of clarity for the following test procedure, test configuration A will be the reference protocol for which a full TRP measurement is performed. Test configuration B will be the other protocol to be tested using the single point radiated test.

Either test sequence is repeated for each channel specified in the appropriate part of Section 5. Either test sequence shall be repeated for each EUT antenna configuration (free space, head and hand phantom, hand phantom only, whip extended, whip retracted). The single/multi point radiated power for both test configurations, the difference, and the calculated TRP for test configuration B shall be recorded.

Use of this alternate test method requires additional measurement uncertainty calculations, which are discussed in Section 7.3.

5.11.1 Single Point Offset Test

The TRP test for test configuration A shall be completed first according to the appropriate part of Section 5. After identifying the position and polarization for which the EUT has its maximum radiated power for one channel, the EUT should be placed in the same configuration. A radiated power measurement shall be first done in test configuration A according to the relevant procedures in Section 5. If possible without touching the phone, initiate a hand-off or change to test configuration B at the equivalent channel. Otherwise, initiate a call in test configuration B and go to the equivalent channel. If the phone must be handled in order to initiate a call in test configuration B, then an additional repositioning uncertainty must be included to account for positioning repeatability. Following that, a radiated power measurement shall be done in test configuration B according to the relevant procedures in Section 5. The two measurements shall be conducted as close in time as possible. The difference between these radiated tests shall then be used as an offset to the TRP for test configuration A in order to calculate the TRP for test configuration B.

Note: *This test procedure is well suited for pairs of test configurations where hand-offs to and from each test configuration are both not possible.*

5.11.2 Multi-point Offset Test

Multiple positions and polarizations shall be predetermined for comparing test configurations A and B. The test positions and polarizations shall be selected such that they are spread relatively evenly in time throughout the TRP test and are spread relatively evenly in space over the sphere. While the TRP test for test configuration A is being performed, measurements for test configuration B will be performed at those predetermined positions and polarizations. This is accomplished at those predetermined positions and polarizations by:

1. Measuring the radiated power for test configuration A
2. Handing-off or changing to test configuration B
3. Measuring the radiated power for test configuration B
4. Handing-off or changing to test configuration A
5. And finally continuing the TRP test until another predetermined position and polarization is to be tested, at which time, steps 1 to 5 are repeated.

The handset shall not be moved between handoffs between configuration A and B and back. Exclude measurement points, which are less than 20 dB above the noise floor, for use in this multi-point test. The difference between the averages of the radiated tests at the predetermined positions and polarizations shall then be used as an offset to the TRP for test configuration A in order to calculate the TRP for test configuration B.

Note: *This test procedure is well suited for pairs of test configurations where hand-offs to and from each test configuration are both possible.*

Note: *More than four test positions/polarizations are recommended to keep the measurement uncertainty low.*

Note: *This test procedure using multiple test positions/polarizations will have lower uncertainty than the test procedure using a single test position/polarization.*

Section 6 Test Procedure—Receiver Performance

Products supporting multiple air-interface technologies shall be tested in accordance with all relevant test procedures. Test results will be provided for each test performed in the format defined in Appendix B.

Receiver Sensitivity procedures will utilize the same spherical measurement procedure as specified for the Transmitter power measurements in Section 5 with the exception of angular step size. Receiver Performance measurements may be made simultaneously with tests performed in Section 5. For measurements not made in conjunction, test setups and frequencies designated CHn-Rx and given in the tables within Section 5 should be used.

Total Isotropic Sensitivity (TIS) shall be fully measured as described above and calculated pursuant to Appendix B.2 for the channel(s) specified in Section 5 for all frequency bands supported by the EUT and required to be tested per this test plan. All of the remaining intermediate channels must be evaluated for relative sensitivity. This is to be done by comparison of the fully measured channel(s) with the intermediate channels measured. Since some digital technologies have a very large number of intermediate channels, some channels may be omitted from actual testing. The combination of intermediate channels that must be evaluated will be specific to each different air interface. In the case of GPS testing, the intermediate channels are utilized to determine if the wireless operation of the EUT interferes with the GPS sensitivity performance of the EUT. Refer to Appendix E for details on TIS. Refer to Appendix K for details on the intermediate channels to be tested for each air interface.

As required in Appendix O, units shall be tested in free-space, with head and hand phantom, and/or with hand phantom only as described in Appendix C, for the full TIS test. The intermediate channel tests will be limited to the right side head and hand phantom (BHHR) and free space test configurations, as applicable from Appendix O, for cellular technologies. Intermediate Channel Degradation testing for GPS shall be tested in the right side head and hand phantom and right hand phantom only configurations as described in Appendix C. A base station simulator appropriate for the air-interface is required for these tests and will be used to report the digital error rate found by the EUT. The EUT will be placed in an active call on the specified test channel(s), and in the specified test conditions. The RF power level of the base station simulator will then be adjusted to achieve the desired digital error rate at each measured location on the sphere. The digital error rate from the EUT will be extracted from the base station simulator or directly from the EUT, where applicable. In general, a sufficient number of bits, packets or frames will be sampled such that the confidence interval in digital error rate is 95% or better.

Since the process of measuring effective radiated receiver sensitivity is typically less accurate than measuring transmitter radiated power, this test specification allows for a relaxation in the spatial separation to 30 degrees in the Theta (θ) and in the Phi (ϕ) -axes for TIS[3]; as noted in Section 2.2.

Please note the following abbreviations in this section:

FS = Free Space

BH = Beside Head (Head Phantom Only)

BHL = Beside Head Left Side (Head Phantom Only)

BHR = Beside Head Right Side (Head Phantom Only)

HL = Hand Left (Hand Phantom Only)

HR = Hand Right (Hand Phantom Only)

BHHL = Beside Head and Hand Left Side (Head and Hand Phantom)

BHHR = Beside Head and Hand Right Side (Head and Hand Phantom)

6.1 AMPS

This section removed for V3.1.

6.2 CDMA

6.2.1 Test Procedure

Receiver Sensitivity measurements shall be performed using the Base Station Simulator to determine the EUT's receiver sensitivity by reporting the minimum forward-link power resulting in a Frame Error Rate (FER) of 0.5% or less with 95% confidence. Refer to Appendix A for set-up illustrations.

3. The goal of the receiver test is to find TIS with an minimum measurement uncertainty of no more than the values specified in Table 7-8 with a confidence of 95%. The use of a 30-degree sampling increment has been shown to contribute on the order of ±0.5 dB or less to this error in TIS for the Cellular and PCS bands, and is therefore acceptable. 30-degree sampling is not considered acceptable for accurately capturing peak field quantities at these frequencies (only integrated quantities like TIS), but that is not what is required for this test. Future extension of this test plan to higher frequencies would require revisiting this sampling issue at those frequencies.

The conducted sensitivity of the EUT shall also be measured at the antenna connector, if available, at all applicable frequencies. It is preferable that the EUT be the same as utilized for the TIS measurements. However, if the EUT does not readily support an antenna port for conducted measurements, a separate modified EUT may be provided for all conducted measurements. If no connector is available, the conducted sensitivity measurement is not required. Ideally, the sensitivity measurement will be performed with the same instrumentation in an equivalent configuration in order to minimize the measurement uncertainty involved. A different sensitivity measurement device may be used as long as any differences in absolute measurement accuracy are accounted for, either in corrections to the recorded sensitivity level or increased reported measurement uncertainty for the conducted measurement. Refer to Appendix A.3 for more information on conducted sensitivity measurements and cabling setups.

The set-up parameters defined in Section 5.2 shall be used with the following exceptions:

- Forward-Link Power: As needed to maintain 0% FER
- Power Control: Closed Loop
- All other parameters shall be set according to TIA-98-E paragraph 3.5.1 for the Receiver Sensitivity test and to the defaults specified in TIA-98-E paragraph 6.5.2.

Note: *If the test point is occurring in a significant null, the forward-link power may have to be raised to establish/maintain a call.*

Page the EUT and direct it to one of the reference test channels. With a digital voice/traffic channel established, invoke an FER Measurement.

Sensitivity measurements shall be equivalent to the minimum RF power level that results in an FER of 0.5% or less with 95% confidence at each measured location on the sphere. The algorithms/methods used to arrive at these results can be optimized for speed by finding alternate points on the FER curve as long as the data is eventually normalized to a data set equivalent to 0.5% or less at each data point. Alternative points on the FER curve greater than 2% shall not be used. The normalization value shall be determined in the same test configuration used to make the other FER measurements (i.e. over-the-air, CDMA set-up parameters, etc.) and shall be derived from an actual sensitivity measurement of 0.5% FER or less with 95% confidence and not an interpolation. In either case, the appropriate contribution to the measurement uncertainty shall be included. Refer to Section 6.15 for details on this procedure and Section 7.4 for details on this measurement uncertainty. The number of frames observed shall be consistent with a 95% confidence level but may be limited to 500 frames maximum at 2% FER and to 2000 frames maximum at 0.5% FER. For FER's in between these two points, the maximum number of frames shall be scaled proportionally. The forward-link power step size shall be no more than 0.5 dB when the RF power level is near the CDMA sensitivity level. The Power Control setting shall be changed to Always Up when the final sensitivity measurement is made for each test point. The Forward-Link Power and the Power Control settings should be set back to defaults prior to tuning to the next test point. The minimum RF power level resulting in an FER of 0.5% or less for each EUT test condition

shall be recorded for integration pursuant to Appendix B.2 to give a single figure of merit referred to as Total Isotropic Sensitivity (TIS).

Typically, the maximum deviation in RX level measurements from peak to null of any one channel does not exceed 30 dB. Therefore, the test facility may elect to initiate each sensitivity measurement starting with the base station power set 30 dB above the lowest sensitivity level measured in order to reduce the time required to search for the sensitivity floor. For points where this setting is below the target sensitivity level, the sensitivity may be considered negligible for that location and the initial value used in place of an actual measurement.

TIS shall be fully measured as described above and calculated pursuant to Appendix B.2 for the three channels (low, middle and high) specified in Section 5 for all frequency bands supported by the EUT and required to be tested per this test plan.

Relative sensitivity measurements shall be repeated on a specified list of intermediate channels as shown in Appendix K.1**.** The separation between channels is no greater than 500 kHz, and the intermediate channels are based on the frequency of the center channel.

Procedure for measuring relative sensitivity on intermediate channels (refer to Figure 6-1):

1. Move the EUT and chamber positioner(s) to the location & polarization resulting in the best-radiated free-space sensitivity measured for the closest, in frequency, fully measured channel (low, mid, high), now used as a Reference Channel.
2. Note the downlink power level which corresponds to the EUT's peak free-space radiated sensitivity as described in Step 1 above, which will be referred to as FS $EIS_{(peak\ low)}$. Next, determine the margin, $M1_{low}$, in dB, between the EUT's measured TIS and the corresponding TIS limit in Table 6-1. If the device doesn't meet the required TIS limit, then set $M1_{low}=0$. Adjust the digital call simulator to the RF power level calculated by the following formula:

EQUATION 6.1

$$\text{Downlink Signal Power}_{\ low}\ (\text{dBm}) = \text{FS EIS}_{(peak\ low)}\ (\text{dBm}) + \text{M1}_{\ low}\ (\text{dB}) + 3\ (\text{dB})$$

For example, if the EUT's FS $EIS_{(peak\ low)}$ was -108 dBm on the low-frequency reference channel, the EUT's low-frequency reference channel FS TIS was -104 dBm, and the FS TIS limit is -100 dBm, we have:

(-108 (dBm) + 4 (dB) + 3 (dB)) dBm = -101 dBm

In this example, the signal generator would be set to -101 dBm for all intermediate channels associated with the low-frequency reference channel as shown in Figure 6-1.

Similar evaluations are performed for mid and high reference channels. Note that $M1_{\ low}$, $M1_{\ mid}$, and $M1_{\ high}$ can vary depending on how much the FS TIS of each channel exceeds the FS TIS limit.

3. Without changing the RF signal level at the EUT, change the frequency of the base station simulator such that it is operating on a defined intermediate channel.
4. Using the base station simulator, measure the FER using the required number of frames as described above. The measured FER must not exceed 0.5%.
5. Repeat steps 3 through 4 of this procedure for all remaining intermediate channels. If the reference channel changes from low to mid or high, move to the location and polarization of the next reference channel (mid, high), see step 1, and take the EUT's measured FS TIS and BHHR TIS on the low, mid and high-frequency reference channels into account when calculating the downlink signal power level according to Equation 6.1 in step 2.
6. Report the free-space pass/fail status of each intermediate channel listed in Appendix K.1 For both the full TIS test and the intermediate channel tests, free-space testing shall be conducted based on device type, as specified in Appendix O. Perform each test on all specified frequencies with the EUT antenna extended and retracted, as applicable.
7. If the device must be tested in the BHHR position, then move the EUT and chamber positioner(s) to the location and polarization resulting in the best-radiated BHHR sensitivity measured for the closest, in frequency, fully measured channel (low, mid, high), now used as a Reference Channel.
8. Devices which must be tested in the BHHR position shall be evaluated for intermediate channel performance using a Pass/Fail limit provided by the following formula:

EQUATION 6.2

$$\text{BHHR TIS Pass/Fail limit}_{low}\,(\text{dBm}) = \text{FS TIS Pass/Fail limit (dBm)} + (\text{EUT BHHR TIS}_{low}\,(\text{dBm}) - \text{EUT FS TIS}_{low}(\text{dBm}))$$

For example, if the FS TIS limit is -100 dBm, the EUT BHHR TIS on the low-frequency reference channel is -99 dBm, and the EUT FS TIS on the low-frequency reference channel is -104 dBm, we have:

(-100 (dBm) + (-99 (dBm) - (-104 (dBm)))) dBm = -95 dBm

In this example, -95 dBm would be the BHHR TIS Pass/Fail Limit $_{low}$ used when repeating Steps 1 through 6 above with the EUT in the BHHR position for all intermediate channels associated with the low-frequency reference channel as shown in Figure 6-1.

Similar evaluations are performed for mid and high reference channels. Note that BHHR TIS Pass/Fail limit $_{low}$, BHHR TIS Pass/Fail limit $_{mid}$ and BHHR TIS Pass/Fail limit $_{high}$ can be different.

9. Note the downlink power level which corresponds to the EUT's peak BHHR radiated sensitivity as described in Step 7 above, which will be referred to as BHHR EIS$_{(peak\ low)}$. Since the BHHR TIS Pass/Fail limit $_{low}$ is directly derived from the FS limit and the TIS difference, see Equation 6.2, the same margin M1 $_{low}$ is to be used.

Adjust the digital call simulator to the RF power level calculated by the following formula:

EQUATION 6.3

$$\text{Downlink Signal Power}_{\text{low}}\ (\text{dBm}) = \text{BHHR EIS}_{(\text{peak low})}\ (\text{dBm}) + \text{M1}_{\text{low}}\ (\text{dB}) + 3\ (\text{dB})$$

For example, if the EUT's BHHR EIS(peak low) was -100 dBm on the low-frequency reference channel, the EUT's low-frequency reference channel BHHR TIS low was -96 dBm, and the BHHR TIS low limit is -92 dBm, we have:

(-100 (dBm) + 4 (dB) + 3 (dB)) dBm = -93 dBm

In this example, the signal generator would be set to -93 dBm for all intermediate channels associated with the low-frequency reference channel as shown in Figure 6-1.

Similar evaluations are performed for mid and high reference channels.

10. Without changing the RF signal level, change the frequency of the base station simulator such that it is operating on a defined intermediate channel.
11. Using the base station simulator, measure the FER using the required number of frames as described above. The measured FER must not exceed 0.5%.
12. Repeat steps 10 through 11 of this procedure for all remaining intermediate channels. If the reference channel changes from low to mid or high, move to the location and polarization of the next reference channel (mid, high), see step 7, and take the EUT's measured FS TIS and BHHR TIS on the low, mid and high-frequency reference channels into account when calculating the downlink signal power level according to Equation 6.3 in step 9.
13. Report the BHHR pass/fail status of each intermediate channel listed in Appendix K.1. For both the full TIS test and the intermediate channel tests, head/hand testing shall be conducted based on device type, as specified in Appendix O. Refer to Appendix C for head/hand testing requirements. Perform each test on all specified frequencies with the EUT antenna extended and retracted, as applicable.
14. The methodology in Step 8 shall be applied to determine the TIS Pass/Fail Limits for all non-primary mechanical modes and secondary antennas, if applicable, for the purpose of performing the intermediate channel desense test.

FIGURE 6-1 ILLUSTRATION OF RELATIVE SENSITIVITY ON INTERMEDIATE CHANNELS TEST. GREEN LINES INDICATE A PASS-FAIL TEST PERFORMED (MARGIN + 3) DB ABOVE THE CORRESPONDING EIS LEVEL OF THE NEAREST CHANNEL FOR WHICH A FULL TIS MEASUREMENT WAS PERFORMED

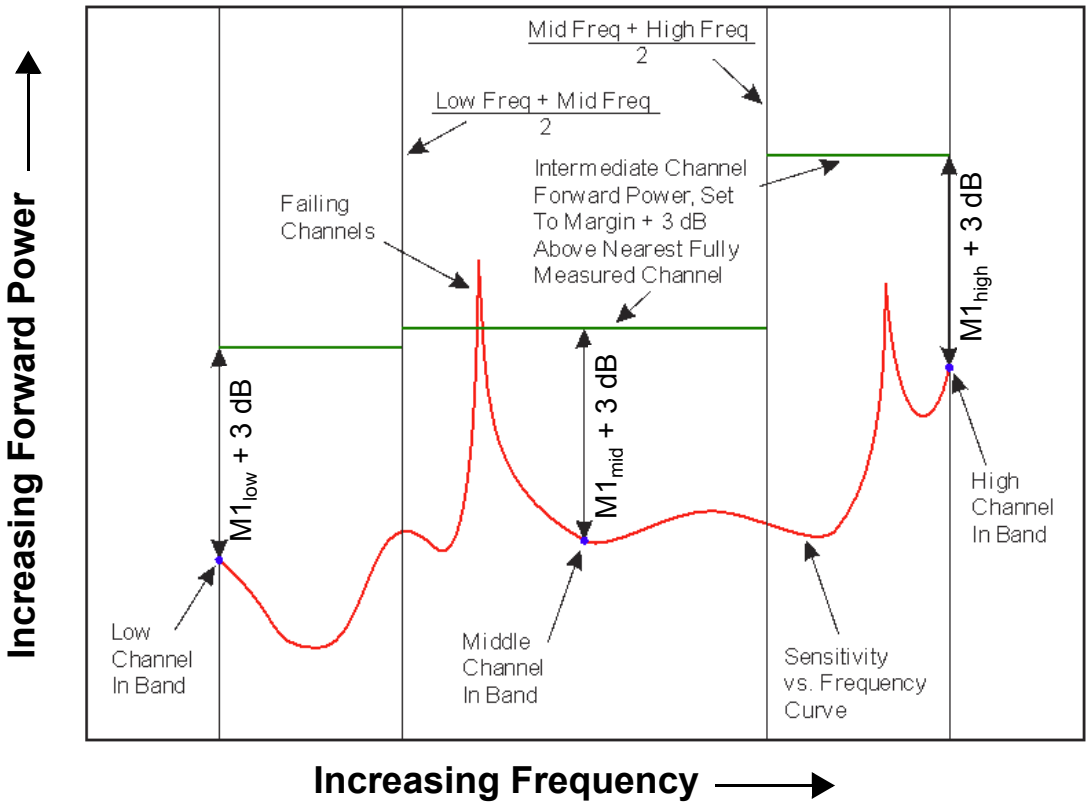

For the full TIS test, head/hand and/or free-space testing shall be conducted based on device type, as specified in Appendix O. For the intermediate channel tests, head and hand phantom and free-space test configurations shall be conducted based on device type, as specified in Appendix O. Refer to Appendix C for head/hand testing requirements. Perform each test on all specified frequencies with the EUT antenna extended and retracted, as applicable.

6.2.2 Criteria

Results shall be reported as specified in Appendix B using the figures of merit given in Appendix B.2. Reports shall include results for free-space and simulated-use configurations (if applicable) across all channels measured with the EUT antenna extended and retracted.

Relative sensitivity on intermediate channels test results shall be provided in a file format equivalent to that specified in Appendix B.

TABLE 6-1 CDMA MAXIMUM TIS LEVEL (IN DBM) REQUIREMENTS FOR THE PRIMARY MECHANICAL MODE[1]

Band	Device Held Up to Head for Voice (Yes/No)	Antenna Type	FS	BHHL and BHHR	HL and HR
CDMA 800	Yes[2]	Embedded	-101	TBD	TBD
		Stub or Retractable	-101	TBD	TBD
	No[3]	All	-101	N/A	N/A
CDMA 1900	Yes[2]	Embedded	-101	TBD	TBD
		Stub or Retractable	-101	TBD	TBD
	No[3]	All	-101	N/A	N/A
CDMA 2100/1700	Yes[2]	Embedded	-101	TBD	TBD
		Stub or Retractable	-101	TBD	TBD
	No[3]	All	-101	N/A	N/A

Note 1: Primary Mechanical Mode refers to device configured in preferred mode per manufacturer instructions (typically means antenna extended, fold or portrait slide open, but depends on form factor).

Note 2: "Yes" applies if the device supports voice operation in the talking position against the head in any cellular radio mode.

Note 3: "No" would be applicable to data-centric devices that are not held up against the head, e.g., embedded laptop solutions.

6.3 TDMA

This section removed for V3.1.

6.4 GSM

6.4.1 Test Procedure

Receiver Sensitivity measurements shall be performed using the Base Station Simulator to determine the EUT's receiver sensitivity by reporting the minimum forward-link power resulting in a Class II Residual Bit Error Rate (RBER) of 2.44% or less with 95% confidence. Refer to Appendix A for set-up illustrations.

The conducted sensitivity of the EUT shall also be measured at the antenna connector, if available, at all applicable frequencies. It is preferable that the EUT be the same as utilized for the TIS measurements. However, if the EUT does not readily support an antenna port for conducted measurements, a separate modified EUT may be provided for all conducted measurements. If no connector is available, the conducted sensitivity measurement is not required. Ideally, the sensitivity measurement will be performed with the same instrumentation in an equivalent configuration in order to minimize the measurement uncertainty involved. A different sensitivity measurement device may be used as long as any differences in absolute measurement accuracy are accounted for, either in corrections to the recorded sensitivity level or increased reported measurement uncertainty for the conducted measurement. Refer to Appendix A.3 for more information on conducted sensitivity measurements and cabling setups.

The set-up parameters defined in Section 5.4 shall be used with the following exceptions:

a. Forward-Link Power: As needed to maintain 0% RBER

b. Power Control Level (PCL) adjusted high enough to ensure that there are no communication errors introduced on the reverse channel. The EUT does not need to be set to maximum power at the initiation of the sensitivity search.

c. The base station simulator shall configure the EUT for loopback mode. Refer to GSM 05.05 and 3GPP TS 51.010 for procedures and criteria for the setup of loopback mode.

Note: *If the test point is occurring in a significant null, the forward-link power may have to be raised to establish/maintain a call.*

Page the EUT and direct it to one of the reference test channels. With a digital voice/traffic channel established, invoke an RBER Measurement.

Sensitivity measurements shall be equivalent to the minimum RF power level that results in a Class II RBER of 2.44% or less with 95% confidence at each measured location on the sphere. The algorithms/methods used to arrive at these results can be optimized for speed by finding alternate points on the BER curve as long as the data is eventually normalized to a value equivalent to 2.44% or less at each data point. The normalization value shall be determined in the same test configuration used to make the other BER measurements (i.e. over-the-air, GSM

set-up parameters, etc.) and shall be derived from an actual sensitivity measurement of 2.44% BER or less with 95% confidence and not based on an interpolation. In either case, the appropriate contribution to the measurement uncertainty shall be included. Refer to Section 6.15 for details on this procedure and Section 7.4 for details on this measurement uncertainty. The number of frames observed shall be consistent with a 95% confidence level but may be limited to 135 frames maximum. The forward power step size shall be no more than 0.5 dB when the RF power level is near the target sensitivity level. The Power Control Level setting shall be changed to maximum power when the final sensitivity measurement is made for each test point, as well as when any BER reference curve is generated. The Forward Link Power and the Power Control Level settings should be set back to defaults prior to tuning to the next test point. The minimum RF power level resulting in a Class II RBER of 2.44% or less for each EUT test condition shall be recorded for integration pursuant to Appendix B.2 to give a single figure of merit referred to as Total Isotropic Sensitivity (TIS).

Typically, the maximum deviation in RX level measurements from peak to null of any one channel does not exceed 30 dB. Therefore, the test facility may elect to initiate each sensitivity measurement starting with the base station power set 30 dB above the lowest sensitivity level measured in order to reduce the time required to search for the sensitivity floor. For points where this setting is below the target sensitivity level, the sensitivity may be considered negligible for that location and the initial value used in place of an actual measurement.

TIS shall be fully measured as described above and calculated pursuant to Appendix B.2 for the 3 channels (low, middle and high) specified in Section 5 for all frequency bands supported by the EUT and required to be tested per this test plan.

Relative sensitivity measurements will be repeated on all channels.

1. Move the EUT and chamber positioner(s) to the location & polarization resulting in the best-radiated free-space sensitivity measured for the closest, in frequency, fully measured channel (low, mid, high), now used as a Reference Channel.
2. Note the downlink power level which corresponds to the EUT's peak free-space radiated sensitivity as described in Step 1 above, which will be referred to as FS $EIS_{(peak\ low)}$. Next, determine the margin, $M1_{low}$, in dB, between the EUT's measured TIS and the corresponding TIS limit in Table 6-2. If the device doesn't meet the required TIS limit, then set $M1_{low}=0$. Adjust the digital call simulator to the RF power level calculated by the following formula:

EQUATION 6.4

$$\text{Downlink Signal Power}_{low}\ (\text{dBm}) = \text{FS EIS}_{(peak\ low)}\ (\text{dBm}) + \text{M1}_{low}\ (\text{dB}) + 3\ (\text{dB})$$

For example, if the EUT's FS $EIS_{(peak\ low)}$ was -108 dBm on the low-frequency reference channel, the EUT's low-frequency reference channel FS TIS_{low} was -104 dBm, and the FS TIS limit is -100 dBm, we have:

(-108 (dBm) + 4 (dB) + 3 (dB)) dBm = -101 dBm

In this example, the signal generator would be set to -101 dBm for all intermediate channels associated with the low-frequency reference channel as shown in Figure 6-1.

Similar evaluations are performed for mid and high reference channels. Note that $M1_{low}$, $M1_{mid}$, and $M1_{high}$ can vary depending on how much the FS TIS of each channel exceeds the FS TIS limit.

3. Without changing the RF signal level at the EUT, change the frequency of the base station simulator such that it is operating on a defined intermediate channel.

4. Using the base station simulator, measure the Class II RBER using the required number of frames as described above. The measured RBER must not exceed 2.44%.

5. Repeat steps 3 through 4 of this procedure for all remaining intermediate channels. If the reference channel changes from low to mid or high, move to the location and polarization of the next reference channel (mid, high), see step 1, and take the EUT's measured FS TIS and BHHR TIS on the low, mid and high-frequency reference channels into account when calculating the downlink signal power level according to Equation 6.4 in step 2.

6. Report the free-space pass/fail status of each intermediate channel listed in Appendix K.2 For both the full TIS test and the intermediate channel tests, free-space testing shall be conducted based on device type, as specified in Appendix O. Perform each test on all specified frequencies with the EUT antenna extended and retracted, as applicable.

7. If the device must be tested in the BHHR position, then move the EUT and chamber positioner(s) to the location and polarization resulting in the best-radiated BHHR sensitivity measured for the closest, in frequency, fully measured channel (low, mid, high), now used as a Reference Channel.

8. Devices which must be tested in the BHHR position shall be evaluated for intermediate channel performance using a Pass/Fail limit provided by the following formula:

EQUATION 6.5

$$\text{BHHR TIS Pass/Fail limit}_{low}\text{ (dBm)} = \text{FS TIS Pass/Fail limit (dBm)} + (\text{EUT BHHR TIS}_{low}\text{ (dBm)} - \text{EUT FS TIS}_{low}\text{ (dBm)})$$

For example, if the FS TIS limit is -100 dBm, the EUT BHHR TIS_{low} on the low-frequency reference channel is -99 dBm, and the EUT FS TIS_{low} on the low-frequency reference channel is -104 dBm, we have:

(-100 (dBm) + (-99 (dBm) - (-104 (dBm)))) dBm = -95 dBm

In this example, -95 dBm would be the BHHR TIS Pass/Fail $Limit_{low}$ used when repeating Steps 1 through 6 above with the EUT in the BHHR position for all intermediate channels associated with the low-frequency reference channel as shown in Figure 6-1.

Similar evaluations are performed for mid and high reference channels. Note that BHHR TIS Pass/Fail limit $_{low}$, BHHR TIS Pass/Fail limit $_{mid}$ and BHHR TIS Pass/Fail limit $_{high}$ can be different.

9. Note the downlink power level which corresponds to the EUT's peak BHHR radiated sensitivity as described in Step 7 above, which will be referred to as BHHR EIS$_{(peak\ low)}$. Since the BHHR TIS Pass/Fail limit $_{low}$ is directly derived from the FS limit and the TIS difference, see Equation 6.5, the same margin M1 $_{low}$ is to be used. Adjust the digital call simulator to the RF power level calculated by the following formula:

EQUATION 6.6

$$\text{Downlink Signal Power}_{low}\ (\text{dBm}) = \text{BHHR EIS}_{(peak\ low)}\ (\text{dBm}) + \text{M1}_{low}\ (\text{dB}) + 3\ (\text{dB})$$

For example, if the EUT's BHHR EIS(peak low) was -100 dBm on the low-frequency reference channel, the EUT's low-frequency reference channel BHHR TIS low was -96 dBm, and the BHHR TIS low limit is -92 dBm, we have:

(-100 (dBm) + 4 (dB) + 3 (dB)) dBm = -93 dBm

In this example, the signal generator would be set to -93 dBm for all intermediate channels associated with the low-frequency reference channel as shown in Figure 6-1.

Similar evaluations are performed for mid and high reference channels.

10. Without changing the RF signal level, change the frequency of the base station simulator such that it is operating on a defined intermediate channel.

11. Using the base station simulator, measure the Class II RBER using the required number of frames as described above. The measured RBER must not exceed 2.44%.

12. Repeat steps 10 through 11 of this procedure for all remaining intermediate channels. If the reference channel changes from low to mid or high, move to the location and polarization of the next reference channel (mid, high), see step 7, and take the EUT's measured FS TIS and BHHR TIS on the low, mid and high-frequency reference channels into account when calculating the downlink signal power level according to Equation 6.6 in step 9.

13. Report the BHHR pass/fail status of each intermediate channel listed in Appendix K.2. For both the full TIS test and the intermediate channel tests, head/hand testing shall be conducted based on device type, as specified in Appendix O. Refer to Appendix C for head/hand testing requirements. Perform each test on all specified frequencies with the EUT antenna extended and retracted, as applicable.

14. The methodology in Step 8 shall be applied to determine the TIS Pass/Fail Limits for all non-primary mechanical modes for the purpose of performing the intermediate channel desense test.

For the full TIS test, head/hand and/or free-space testing shall be conducted based on device type, as specified in Appendix O. For the intermediate channel tests, head and hand phantom and free-space test configurations shall be conducted based on device type, as specified in Appendix O. Refer to Appendix C for head/hand testing requirements. Perform each test on all specified frequencies with the EUT antenna extended and retracted, as applicable.

6.4.2 Criteria

Results shall be reported as specified in Appendix B using the figures of merit given in Appendix B.2. Reports shall include results for free-space and head/hand configurations (if applicable) across all channels measured with the EUT antenna extended and retracted.

The limits in Table 6-2 are recommended. However, they shall be used to determine the mandatory pass/fail limits for the intermediate channel desense tests.

Relative sensitivity on intermediate channels test results shall be provided in a file format specified in Appendix B. The reported RF level that produces a 2.44% RBER for each channel shall be less than the level determined in Section 6.4.1.

TABLE 6-2 GSM MAXIMUM TIS LEVEL (IN DBM) RECOMMENDED LIMITS FOR THE PRIMARY MECHANICAL MODE[1]

Band	Device Held Up to Head for Voice (Yes/No)	Device Power Class	FS	BHHL and BHHR	HL and HR[4]
GSM 850	Yes[2]	2	-99	TBD	N/A
		3	-99	TBD	N/A
		4	-99	TBD	N/A
		5	-99	TBD	N/A
	No[3]	2	-99	N/A	N/A
		3	-99	N/A	N/A
		4	-99	N/A	N/A
		5	-99	N/A	N/A

TABLE 6-2 GSM MAXIMUM TIS LEVEL (IN DBM) RECOMMENDED LIMITS FOR THE PRIMARY MECHANICAL MODE[1]

Band	Device Held Up to Head for Voice (Yes/No)	Device Power Class	FS	BHHL and BHHR	HL and HR[4]
GSM 1900	Yes[2]	1	-101.5	TBD	N/A
		2	-101.5	TBD	N/A
		3	-101.5	TBD	N/A
	No[3]	1	-101.5	N/A	N/A
		2	-101.5	N/A	N/A
		3	-101.5	N/A	N/A

Note 1: Primary Mechanical Mode refers to device configured in preferred mode per manufacturer instructions (typically means antenna extended, fold or portrait slide open, but depends on form factor).

Note 2: "Yes" applies if the device supports voice operation in the talking position against the head in any cellular radio mode.

Note 3: "No" would be applicable to data-centric devices that are not held up against the head, e.g., embedded laptop solutions.

Note 4: GSM HL and HR tests are optional and are currently not a requirement of this Test Plan, but may be used for single and multiple offset point reference tests including GPRS/EGPRS.

6.5 GPRS

6.5.1 Test Procedure

GPRS Receiver Sensitivity measurements shall be performed using a GPRS-capable Base Station Simulator to determine the EUT's receiver sensitivity by reporting the minimum forward-link power resulting in a Block Error Rate (BLER) of 10% or less with 95% confidence. Refer to Appendix A for set-up illustrations.

The conducted sensitivity of the EUT shall also be measured at the antenna connector, if available, at all applicable frequencies. It is preferable that the EUT be the same as utilized for the TIS measurements. However, if the EUT does not readily support an antenna port for conducted measurements, a separate modified EUT may be provided for all conducted measurements. If no connector is available, the conducted sensitivity measurement is not required. Ideally, the sensitivity measurement will be performed with the same instrumentation in an equivalent configuration in order to minimize the measurement uncertainty involved. A different sensitivity measurement device may be used as long as any

differences in absolute measurement accuracy are accounted for, either in corrections to the recorded sensitivity level or increased reported measurement uncertainty for the conducted measurement. Refer to Appendix A.3 for more information on conducted sensitivity measurements and cabling setups.

The set-up parameters defined in Section 5.5 shall be used with the following exceptions:

a. Forward-Link Power: As needed to maintain 0% BLER at CS-1.

b. Power Control Level (PCL)/Gamma adjusted to ensure that there are no communication errors introduced on the reverse channel. The EUT does not need to be set to maximum power at the initiation of the sensitivity search.

c. The GPRS base station simulator shall configure the EUT for GPRS data loopback mode. Refer to GSM 05.05 and 3GPP TS 51.010 for procedures and criteria for the setup of data loopback mode.

d. The (E)GPRS base station simulator shall be configured to transmit with the maximum number of downlink slots supported by the EUT.

Note: *If the test point is occurring in a significant null, the forward-link power may have to be raised to establish/maintain an active data loopback session.*

Invoke a GPRS loopback session between the EUT and the GPRS base station simulator on one of the reference test channels. Verify that the GPRS base station simulator is utilizing CS-1 coding on the downlink. With an active data loopback session established, invoke a BLER Measurement.

Sensitivity measurements shall be equivalent to the minimum RF power level that results in a BLER of 10% or less based on 2000 received blocks with 95% confidence at each measured location on the sphere. If the alternate/normalization method is not used, the number of blocks may be limited to 200 at each measured location on the sphere. The algorithms/methods used to arrive at these results can be optimized for speed by finding alternate points on the BLER curve as long as the data is eventually normalized to a value equivalent to 10% or less based on 2000 received blocks at each data point. The normalization value shall be determined in the same test configuration used to make the other BLER measurements (i.e. over-the-air, GSM set-up parameters, etc.) and shall be derived from an actual sensitivity measurement of 10% BLER or less based on 2000 received blocks with 95% confidence and not based on an interpolation. In either case, the appropriate contribution to the measurement uncertainty shall be included. Refer to Section 6.15 for details on this procedure and Section 7.4 for details on this measurement uncertainty. The forward power step size shall be no more than 0.5 dB when the RF power level is near the target sensitivity level. The Power Control Level/Gamma setting shall be changed to maximum power when the final sensitivity measurement is made for each test point, as well as when any BLER reference curve is generated. The Forward Link Power, the Power Control Level/Gamma settings should be set back to defaults prior to tuning to the next test point. The minimum RF power level resulting in a BLER of 10% or less for each EUT test condition shall be recorded for integration pursuant to Appendix B.2 to give a single figure of merit referred to as Total Isotropic Sensitivity (TIS).

Typically, the maximum deviation in RX level measurements from peak to null of any one channel does not exceed 30 dB. Therefore, the test facility may elect to initiate each sensitivity measurement starting with the base station power set 30 dB above the lowest sensitivity level measured in order to reduce the time required to search for the sensitivity floor. For points where this setting is below the target sensitivity level, the sensitivity may be considered negligible for that location and the initial value used in place of an actual measurement.

TIS shall be fully measured as described above and calculated pursuant to Appendix B.2 for the 3 channels (low, middle and high) specified in Section 5 for all frequency bands supported by the EUT and required to be tested per this test plan.

Relative sensitivity measurements will be repeated on all channels. Reference channel and intermediate channel measurements shall be actual sensitivity measurements of 10% BLER or less based on 2000 received blocks.

Procedure for measuring relative sensitivity on intermediate channels (refer to Figure 6-1):

1. Move the EUT and chamber positioner(s) to the location & polarization resulting in the best-radiated free-space sensitivity measured for the closest, in frequency, fully measured channel (low, mid, high), now used as a Reference Channel.
2. Note the downlink power level which corresponds to the EUT's peak free-space radiated sensitivity as described in Step 1 above, which will be referred to as FS $EIS_{(peak\ low)}$. Next, determine the margin, $M1_{low}$, in dB, between the EUT's measured TIS and the corresponding TIS limit in Table 6-3. If the device doesn't meet the required TIS limit, then set $M1_{low}$=0. Adjust the digital call simulator to the RF power level calculated by the following formula:

   EQUATION 6.7

   $$\text{Downlink Signal Power}_{low}\ (\text{dBm}) = \text{FS EIS}_{(peak\ low)}\ (\text{dBm}) + M1_{low}\ (\text{dB}) + 3\ (\text{dB})$$

   For example, if the EUT's FS $EIS_{(peak\ low)}$ was -108 dBm on the low-frequency reference channel, the EUT's low-frequency reference channel FS TIS_{low} was -104 dBm, and the FS TIS limit is -100 dBm, we have:

   (-108 (dBm) + 4 (dB) + 3 (dB)) dBm = -101 dBm

   In this example, the signal generator would be set to -101 dBm for all intermediate channels associated with the low-frequency reference channel as shown in Figure 6-1.

   Similar evaluations are performed for mid and high reference channels. Note that $M1_{low}$, $M1_{mid}$, and $M1_{high}$ can vary depending on how much the FS TIS of each channel exceeds the FS TIS limit.
3. Without changing the RF signal level at the EUT, change the frequency of the base station simulator such that it is operating on a defined intermediate channel.

4. Using the GPRS base station simulator, measure the downlink BLER using the required number of blocks as described above. The measured BLER must not exceed 10%.
5. Repeat steps 3 through 4 of this procedure for all remaining intermediate channels. If the reference channel changes from low to mid or high, move to the location and polarization of the next reference channel (mid, high), see step 1, and take the EUT's measured FS TIS and BHHR TIS on the low, mid and high-frequency reference channels into account when calculating the downlink signal power level according to Equation 6.7 in step 2.
6. Report the free-space pass/fail status of each intermediate channel listed in Appendix K.2 For both the full TIS test and the intermediate channel tests, free-space testing shall be conducted based on device type, as specified in Appendix O. Perform each test on all specified frequencies with the EUT antenna extended and retracted, as applicable.
7. If the device must be tested in the BHHR position, then move the EUT and chamber positioner(s) to the location and polarization resulting in the best-radiated BHHR sensitivity measured for the closest, in frequency, fully measured channel (low, mid, high), now used as a Reference Channel.
8. Devices which must be tested in the BHHR position shall be evaluated for intermediate channel performance using a Pass/Fail limit provided by the following formula:

EQUATION 6.8

$$\text{BHHR TIS Pass/Fail limit}_{low}\text{ (dBm)} = \text{FS TIS Pass/Fail limit (dBm)} + (\text{EUT BHHR TIS}_{low}\text{ (dBm)} - \text{EUT FS TIS}_{low}\text{ (dBm)})$$

For example, if the FS TIS limit is -100 dBm, the EUT BHHR TIS $_{low}$ on the low-frequency reference channel is -99 dBm, and the EUT FS TIS $_{low}$ on the low-frequency reference channel is -104 dBm, we have:

(-100 (dBm) + (-99 (dBm) - (-104 (dBm)))) dBm = -95 dBm

In this example, -95 dBm would be the BHHR TIS Pass/Fail Limit $_{low}$ used when repeating Steps 1 through 6 above with the EUT in the BHHR position for all intermediate channels associated with the low-frequency reference channel as shown in Figure 6-1.

Similar evaluations are performed for mid and high reference channels. Note that BHHR TIS Pass/Fail limit $_{low}$, BHHR TIS Pass/Fail limit $_{mid}$ and BHHR TIS Pass/Fail limit $_{high}$ can be different.

9. Note the downlink power level which corresponds to the EUT's peak BHHR radiated sensitivity as described in Step 7 above, which will be referred to as BHHR $EIS_{(peak\ low)}$. Since the BHHR TIS Pass/Fail limit $_{low}$ is directly derived from the FS limit and the TIS difference, see Equation 6.8, the same margin M1 $_{low}$ is to be used. Adjust the digital call simulator to the RF power level calculated by the following formula:

EQUATION 6.9

$$\text{Downlink Signal Power}_{\text{low}}\ (\text{dBm}) = \text{BHHR EIS}_{(\text{peak low})}\ (\text{dBm}) + \text{M1}_{\text{low}}\ (\text{dB}) + 3\ (\text{dB})$$

For example, if the EUT's BHHR EIS(peak low) was -100 dBm on the low-frequency reference channel, the EUT's low-frequency reference channel BHHR TIS low was -96 dBm, and the BHHR TIS low limit is -92 dBm, we have:

(-100 (dBm) + 4 (dB) + 3 (dB)) dBm = -93 dBm

In this example, the signal generator would be set to -93 dBm for all intermediate channels associated with the low-frequency reference channel as shown in Figure 6-1.

Similar evaluations are performed for mid and high reference channels.

10. Without changing the RF signal level, change the frequency of the base station simulator such that it is operating on a defined intermediate channel.
11. Using the GPRS base station simulator, measure the downlink BLER using the required number of blocks as described above. The measured BLER must not exceed 10%.
12. Repeat steps 10 through 11 of this procedure for all remaining intermediate channels. If the reference channel changes from low to mid or high, move to the location and polarization of the next reference channel (mid, high), see step 7, and take the EUT's measured FS TIS and BHHR TIS on the low, mid and high-frequency reference channels into account when calculating the downlink signal power level according to Equation 6.9 in step 9.
13. Report the BHHR pass/fail status of each intermediate channel listed in Appendix K.2. For both the full TIS test and the intermediate channel tests, head/hand testing shall be conducted based on device type, as specified in Appendix O. Refer to Appendix C for head/hand testing requirements. Perform each test on all specified frequencies with the EUT antenna extended and retracted, as applicable.
14. The methodology in Step 8 shall be applied to determine the TIS Pass/Fail Limits for all non-primary mechanical modes for the purpose of performing the intermediate channel desense test.

For the full TIS test, head/hand and/or free-space testing shall be conducted based on device type, as specified in Appendix O. For the intermediate channel tests, head and hand phantom and free-space test configurations shall be conducted based on device type, as specified in Appendix O. Refer to Appendix C for head/hand testing requirements. Perform each test on all specified frequencies with the EUT antenna extended and retracted, as applicable.

Note: *Head-adjacent testing is only required for GPRS if the EUT supports usage against the head in this mode (e.g., VoIP).*

Intermediate channel tests are not required if intermediate channel tests are passed in GSM for the same frequency bands.

6.5.2 Criteria

Results shall be reported as specified in Appendix B using the figures of merit given in Appendix B.2. Reports shall include results for free-space and head/hand configurations (if applicable) across all channels measured with the EUT antenna extended and retracted.

The limits in Table 6-3 are recommended. However, they shall be used to determine the mandatory pass/fail limits for the intermediate channel desense tests.

Relative sensitivity on intermediate channels test results shall be provided in a file format specified in Appendix B. The reported RF level that produces a 10% BLER for each channel shall be less than the level determined in Section 6.5.1.

TABLE 6-3 GPRS MAXIMUM TIS LEVEL (IN DBM) RECOMMENDED LIMITS FOR THE PRIMARY MECHANICAL MODE[1]

Band	Device Held Up to Head for Voice (Yes/No)	Device Power Class	FS	BHHL and BHHR	HL and HR
GPRS 850	Yes[2]	2	-99	TBD	TBD
		3	-99	TBD	TBD
		4	-99	TBD	TBD
		5	-99	TBD	TBD
	No[3]	2	-99	N/A	N/A
		3	-99	N/A	N/A
		4	-99	N/A	N/A
		5	-99	N/A	N/A
GPRS 1900	Yes[2]	1	-101.5	TBD	TBD
		2	-101.5	TBD	TBD
		3	-101.5	TBD	TBD
	No[3]	1	-101.5	N/A	N/A
		2	-101.5	N/A	N/A
		3	-101.5	N/A	N/A

Note 1: Primary Mechanical Mode refers to device configured in preferred mode per manufacturer instructions (typically means antenna extended, fold or portrait slide open, but depends on form factor).

Note 2: “Yes” applies if the device supports voice operation in the talking position against the head in any cellular radio mode.

Note 3: “No” would be applicable to data-centric devices that are not held up against the head, e.g., embedded laptop solutions.

6.6 EGPRS

6.6.1 Test Procedure

EGPRS Receiver Sensitivity measurements shall be performed using an EGPRS-capable Base Station Simulator to determine the EUT's receiver sensitivity by reporting the minimum forward-link power resulting in a Block Error Rate (BLER) of 10% or less based on 2000 received blocks with 95% confidence. Refer to Appendix A for set-up illustrations.

The conducted sensitivity of the EUT shall also be measured at the antenna connector, if available, at all applicable frequencies. It is preferable that the EUT be the same as utilized for the TIS measurements. However, if the EUT does not readily support an antenna port for conducted measurements, a separate modified EUT may be provided for all conducted measurements. If no connector is available, the conducted sensitivity measurement is not required. Ideally, the sensitivity measurement will be performed with the same instrumentation in an equivalent configuration in order to minimize the measurement uncertainty involved. A different sensitivity measurement device may be used as long as any differences in absolute measurement accuracy are accounted for, either in corrections to the recorded sensitivity level or increased reported measurement uncertainty for the conducted measurement. Refer to Appendix A.3 for more information on conducted sensitivity measurements and cabling setups.

The set-up parameters defined in Section 5.6 shall be used with the following exceptions:

a. Forward-Link Power: As needed to maintain 0% BLER while using downlink modulation coding scheme MCS-5

b. Power Control Level (PCL)/Gamma adjusted high enough to ensure that there are no communication errors introduced on the reverse channel. The EUT does not need to be set to maximum power at the initiation of the sensitivity search.

c. The EGPRS base station simulator shall configure the EUT for EGPRS data loopback mode. Refer to GSM 05.05 and 3GPP TS 51.010 for procedures and criteria for the setup of data loopback mode.

Note: *If the test point is occurring in a significant null, the forward-link power may have to be raised to establish/maintain an active data loopback session.*

Invoke data loopback between the EUT and the EGPRS base station simulator on one of the reference test channels. Verify that the EGPRS base station simulator is utilizing MCS-5 coding in the downlink. With an active data loopback session established, invoke a BLER Measurement.

Sensitivity measurements shall be equivalent to the minimum RF power level that results in a BLER of 10% or less based on 2000 received blocks with 95% confidence at each measured location on the sphere. If the alternate/normalization method is not used, the number of blocks

may be limited to 200 at each measured location on the sphere. The algorithms/methods used to arrive at these results can be optimized for speed by finding alternate points on the BLER curve as long as the data is eventually normalized to a value equivalent to 10% or less at each data point. The normalization value shall be determined in the same test configuration used to make the other BLER measurements (i.e., over-the-air, GSM set-up parameters, etc.) and shall be derived from an actual sensitivity measurement of 10% BLER or less based on 2000 received blocks with 95% confidence and not based on an interpolation. In either case, the appropriate contribution to the measurement uncertainty shall be included. Refer to Section 6.15 for details on this procedure and Section 7.4 for details on this measurement uncertainty. The forward power step size shall be no more than 0.5 dB when the RF power level is near the target sensitivity level. The Power Control Level/Gamma setting shall be changed to maximum power when the final sensitivity measurement is made for each test point, as well as when any BLER reference curve is generated. The Forward Link Power, the Power Control Level/Gamma settings should be set back to defaults prior to tuning to the next test point. The minimum RF power level resulting in a BLER of 10% or less for each EUT test condition shall be recorded for integration pursuant to Appendix B.2 to give a single figure of merit referred to as Total Isotropic Sensitivity (TIS).

Typically, the maximum deviation in RX level measurements from peak to null of any one channel does not exceed 30 dB. Therefore, the test facility may elect to initiate each sensitivity measurement starting with the base station power set 30 dB above the lowest sensitivity level measured in order to reduce the time required to search for the sensitivity floor. For points where this setting is below the target sensitivity level, the sensitivity may be considered negligible for that location and the initial value used in place of an actual measurement.

TIS shall be fully measured as described above and calculated pursuant to Appendix B.2 for the 3 channels (low, middle and high) specified in Section 5 for all frequency bands supported by the EUT and required to be tested per this test plan.

Relative sensitivity measurements will be repeated on all channels. Reference channel and intermediate channel measurements shall be actual sensitivity measurements of 10% BLER or less based on 2000 received blocks.

Procedure for measuring relative sensitivity on intermediate channels (refer to Figure 6-1):

1. Move the EUT and chamber positioner(s) to the location & polarization resulting in the best-radiated free-space sensitivity measured for the closest, in frequency, fully measured channel (low, mid, high), now used as a Reference Channel.
2. Note the downlink power level which corresponds to the EUT's peak free-space radiated sensitivity as described in Step 1 above, which will be referred to as FS $EIS_{(peak\ low)}$. Next, determine the margin, $M1_{low}$, in dB, between the EUT's measured TIS and the corresponding TIS limit in Table 6-4. If the device doesn't meet the required TIS limit, then set $M1_{low}=0$. Adjust the digital call simulator to the RF power level calculated by the following formula:

EQUATION 6.10

$$\text{Downlink Signal Power}_{low}\ (\text{dBm}) = \text{FS EIS}_{(\text{peak low})}\ (\text{dBm}) + \text{M1}_{low}\ (\text{dB}) + 3\ (\text{dB})$$

For example, if the EUT's FS $EIS_{(peak\ low)}$ was -108 dBm on the low-frequency reference channel, the EUT's low-frequency reference channel FS TIS_{low} was -104 dBm, and the FS TIS limit is -100 dBm, we have:

(-108 (dBm) + 4 (dB) + 3 (dB)) dBm = -101 dBm

In this example, the signal generator would be set to -101 dBm for all intermediate channels associated with the low-frequency reference channel as shown in Figure 6-1.

Similar evaluations are performed for mid and high reference channels. Note that $M1_{low}$, $M1_{mid}$, and $M1_{high}$ can vary depending on how much the FS TIS of each channel exceeds the FS TIS limit.

3. Without changing the RF signal level at the EUT, change the frequency of the base station simulator such that it is operating on a defined intermediate channel.
4. Using the EGPRS base station simulator, measure the downlink BLER using the required number of blocks as described above. The measured BLER must not exceed 10%.
5. Repeat steps 3 through 4 of this procedure for all remaining intermediate channels. If the reference channel changes from low to mid or high, move to the location and polarization of the next reference channel (mid, high), see step 1, and take the EUT's measured FS TIS and BHHR TIS on the low, mid and high-frequency reference channels into account when calculating the downlink signal power level according to Equation 6.10 in step 2.
6. Report the free-space pass/fail status of each intermediate channel listed in Appendix K.2 For both the full TIS test and the intermediate channel tests, free-space testing shall be conducted based on device type, as specified in Appendix O. Perform each test on all specified frequencies with the EUT antenna extended and retracted, as applicable.
7. If the device must be tested in the BHHR position, then move the EUT and chamber positioner(s) to the location and polarization resulting in the best-radiated BHHR sensitivity measured for the closest, in frequency, fully measured channel (low, mid, high), now used as a Reference Channel.
8. Devices which must be tested in the BHHR position shall be evaluated for intermediate channel performance using a Pass/Fail limit provided by the following formula:

EQUATION 6.11

$$\text{BHHR TIS Pass/Fail limit}_{low}\ (\text{dBm}) = \text{FS TIS Pass/Fail limit (dBm)} + (\text{EUT BHHR TIS}_{low}\ (\text{dBm}) - \text{EUT FS TIS}_{low}\ (\text{dBm}))$$

For example, if the FS TIS limit is -100 dBm, the EUT BHHR TIS $_{low}$ on the low-frequency reference channel is -99 dBm, and the EUT FS TIS $_{low}$ on the low-frequency reference channel is -104 dBm, we have:

(-100 (dBm) + (-99 (dBm) - (-104 (dBm)))) dBm = -95 dBm

In this example, -95 dBm would be the BHHR TIS Pass/Fail Limit $_{low}$ used when repeating Steps 1 through 6 above with the EUT in the BHHR position for all intermediate channels associated with the low-frequency reference channel as shown in Figure 6-1.

Similar evaluations are performed for mid and high reference channels. Note that BHHR TIS Pass/Fail limit $_{low}$, BHHR TIS Pass/Fail limit $_{mid}$ and BHHR TIS Pass/Fail limit $_{high}$ can be different.

9. Note the downlink power level which corresponds to the EUT's peak BHHR radiated sensitivity as described in Step 7 above, which will be referred to as BHHR EIS$_{(peak\ low)}$. Since the BHHR TIS Pass/Fail limit $_{low}$ is directly derived from the FS limit and the TIS difference, see Equation 6.11, the same margin M1 $_{low}$ is to be used. Adjust the digital call simulator to the RF power level calculated by the following formula:

EQUATION 6.12

$$\text{Downlink Signal Power}_{low}\ (\text{dBm}) = \text{BHHR EIS}_{(peak\ low)}\ (\text{dBm}) + \text{M1}_{low}\ (\text{dB}) + 3\ (\text{dB})$$

For example, if the EUT's BHHR EIS(peak low) was -100 dBm on the low-frequency reference channel, the EUT's low-frequency reference channel BHHR TIS low was -96 dBm, and the BHHR TIS low limit is -92 dBm, we have:

(-100 (dBm) + 4 (dB) + 3 (dB)) dBm = -93 dBm

In this example, the signal generator would be set to -93 dBm for all intermediate channels associated with the low-frequency reference channel as shown in Figure 6-1.

Similar evaluations are performed for mid and high reference channels.

10. Without changing the RF signal level, change the frequency of the base station simulator such that it is operating on a defined intermediate channel.

11. Using the EGPRS base station simulator, measure the downlink BLER using the required number of blocks as described above. The measured BLER must not exceed 10%.

12. Repeat steps 10 through 11 of this procedure for all remaining intermediate channels. If the reference channel changes from low to mid or high, move to the location and polarization of the next reference channel (mid, high), see step 7, and take the EUT's measured FS TIS and BHHR TIS on the low, mid and high-frequency reference channels into account when calculating the downlink signal power level according to Equation 6.12 in step 9.

13. Report the BHHR pass/fail status of each intermediate channel listed in Appendix K.2. For both the full TIS test and the intermediate channel tests, head/hand testing shall be conducted based on device type, as specified in Appendix O. Refer to Appendix C for head/hand testing requirements. Perform each test on all specified frequencies with the EUT antenna extended and retracted, as applicable.
14. The methodology in Step 8 shall be applied to determine the TIS Pass/Fail Limits for all non-primary mechanical modes for the purpose of performing the intermediate channel desense test.

For the full TIS test, head/hand and/or free-space testing shall be conducted based on device type, as specified in Appendix O. For the intermediate channel tests, head and hand phantom and free-space test configurations shall be conducted based on device type, as specified in Appendix O. Refer to Appendix C for head/hand testing requirements. Perform each test on all specified frequencies with the EUT antenna extended and retracted, as applicable.

Note: *Head-adjacent testing is only required for EGPRS if the EUT supports usage against the head in this mode (e.g., VoIP).*

6.6.2 Criteria

Results shall be reported as specified in Appendix B using the figures of merit given in Appendix B.2. Reports shall include results for free-space and head/hand configurations (if applicable) across all channels measured with the EUT antenna extended and retracted.

The limits in Table 6-4 are recommended. However, they shall be used to determine the mandatory pass/fail limits for the intermediate channel desense tests.

Relative sensitivity on intermediate channels test results shall be provided in a file format specified in Appendix B. The reported RF level that produces a 10% BLER for each channel shall be less than the level determined in Section 6.6.1

TABLE 6-4 EGPRS MAXIMUM TIS LEVEL (IN DBM) RECOMMENDED LIMITS FOR THE PRIMARY MECHANICAL MODE[1]

Band	Device Held Up to Head for Voice (Yes/No)	Device Power Class	FS	BHHL and BHHR	HL and HR
EGPRS 850	Yes[2]	E1	-94	TBD	TBD
		E2	-94	TBD	TBD
		E3	-94	TBD	TBD
	No[3]	E1	-94	N/A	N/A
		E2	-94	N/A	N/A
		E3	-94	N/A	N/A
EGPRS 1900	Yes[2]	E1	-97	TBD	TBD
		E2	-97	TBD	TBD
		E3	-97	TBD	TBD
	No[3]	E1	-97	N/A	N/A
		E2	-97	N/A	N/A
		E3	-97	N/A	N/A

Note 1: Primary Mechanical Mode refers to device configured in preferred mode per manufacturer instructions (typically means antenna extended, fold or portrait slide open, but depends on form factor).

Note 2: "Yes" applies if the device supports voice operation in the talking position against the head in any cellular radio mode.

Note 3: "No" would be applicable to data-centric devices that are not held up against the head, e.g., embedded laptop solutions.

6.7 UMTS (W-CDMA)

6.7.1 Test Procedure

Receiver Sensitivity measurements shall be performed using the Base Station Simulator to determine the EUT's receiver sensitivity by reporting the minimum forward-link power resulting in a Bit Error Rate (BER) of 1.2% or less at 12.2 kbps data rate with a minimum of 20,000 bits. Refer to Appendix A for set-up illustrations.

The conducted sensitivity of the EUT shall also be measured at the antenna connector, if available, at all applicable frequencies. It is preferable that the EUT be the same as utilized for the TIS measurements. However, if the EUT does not readily support an antenna port for conducted measurements, a separate modified EUT may be provided for all conducted measurements. If no connector is available, the conducted sensitivity measurement is not required. Ideally, the sensitivity measurement will be performed with the same instrumentation in an equivalent configuration in order to minimize the measurement uncertainty involved. A different sensitivity measurement device may be used as long as any differences in absolute measurement accuracy are accounted for, either in corrections to the recorded sensitivity level or increased reported measurement uncertainty for the conducted measurement. Refer to Appendix A.3 for more information on conducted sensitivity measurements and cabling setups.

The set-up parameters defined in Section 5.7 shall be used with the following exceptions:

a. Forward-Link Power: As needed to maintain 0% BER at 12.2 kbps data rate

b. Power Control: Algorithm 2, using closed loop power control with target power sufficient to guarantee error-free uplink transmission.

c. All other parameters shall be set according to 3GPP TS 25.101 sensitivity test case.

Note: *If the test point is occurring in a significant null, the forward-link power may have to be raised to establish/maintain a call.*

Page the EUT and direct it to one of the reference test channels. With a digital voice/traffic channel established, invoke a BER Measurement.

Sensitivity measurements shall be equivalent to the minimum RF power level that results in a BER of 1.2% or less at 12.2 kbps data rate with a minimum of 20,000 bits at each measured location on the sphere. The algorithms/methods used to arrive at these results can be optimized for speed by finding alternate points on the BER curve and/or using higher data rates as long as the data is eventually normalized to a data set equivalent to 1.2% BER or less at each data point. Alternative points on the BER curve greater than 12% shall not be used. The normalization value shall be determined in the same test configuration used to make the other BER measurements (i.e., over-the-air, UMTS set-up parameters, etc.) and shall be derived from an actual sensitivity measurement of 1.2% BER or less at 12.2 kbps with a minimum of 20,000 bits and not an interpolation. The forward-link power step size shall be no more than 0.5dB when the RF power level is near the UMTS sensitivity level. The Power Control setting shall be changed to Algorithm 2 using all up-bits to guarantee that maximum power is transmitted when the final sensitivity measurement is made for each test point. The Forward-Link Power and the Power Control settings should be set back to defaults prior to tuning to the next test point. The minimum RF power level resulting in a BER of 1.2% or less for each EUT test condition shall be recorded for integration pursuant to Appendix B.2 to give a single figure of merit referred to as Total Isotropic Sensitivity (TIS).

Typically, the maximum deviation in RX level measurements from peak to null of any one channel does not exceed 30 dB. Therefore, the test facility may elect to initiate each sensitivity measurement starting with the base station power set 30 dB above the lowest sensitivity level measured in order to reduce the time required to search for the sensitivity floor. For points where this setting is below the target sensitivity level, the sensitivity may be considered negligible for that location and the initial value used in place of an actual measurement.

TIS shall be fully measured as described above and calculated pursuant to Appendix B.2 for the 3 channels (low, middle and high) specified in Section 5 for all frequency bands supported by the EUT and required to be tested per this test plan.

Relative sensitivity measurements will be repeated on a specified list of intermediate channels as shown in Appendix K.3. The separation between channels is no greater than 2.5 MHz, and the intermediate channels are spaced off of the center channel.

Procedure for measuring relative sensitivity on intermediate channels (refer to Figure 6-1):

1. Move the EUT and chamber positioner(s) to the location & polarization resulting in the best-radiated free-space sensitivity measured for the closest, in frequency, fully measured channel (low, mid, high), now used as a Reference Channel.
2. Note the downlink power level which corresponds to the EUT's peak free-space radiated sensitivity as described in Step 1 above, which will be referred to as FS $EIS_{(peak\ low)}$. Next, determine the margin, $M1_{low}$, in dB, between the EUT's measured TIS and the corresponding TIS limit Table 6-5. If the device doesn't meet the required TIS limit, then set $M1_{low}$=0. Adjust the digital call simulator to the RF power level calculated by the following formula:

EQUATION 6.13

$$\text{Downlink Signal Power}_{low}\ (\text{dBm}) = \text{FS EIS}_{(peak\ low)}\ (\text{dBm}) + \text{M1}_{low}\ (\text{dB}) + 3\ (\text{dB})$$

For example, if the EUT's FS $EIS_{(peak\ low)}$ was -108 dBm on the low-frequency reference channel, the EUT's low-frequency reference channel FS TIS_{low} was -104 dBm, and the FS TIS limit is -100 dBm, we have:

(-108 (dBm) + 4 (dB) + 3 (dB)) dBm = -101 dBm

In this example, the signal generator would be set to -101 dBm for all intermediate channels associated with the low-frequency reference channel as shown in Figure 6-1.

Similar evaluations are performed for mid and high reference channels. Note that $M1_{low}$, $M1_{mid}$, and $M1_{high}$ can vary depending on how much the FS TIS of each channel exceeds the FS TIS limit.

3. Without changing the RF signal level at the EUT, change the frequency of the base station simulator such that it is operating on a defined intermediate channel.

4. Using the UMTS base station simulator, measure the downlink BER at a 12.2 kbps data rate using the required number of bits as described above. The measured BER must not exceed 1.2%.
5. Repeat steps 3 through 4 of this procedure for all remaining intermediate channels. If the reference channel changes from low to mid or high, move to the location and polarization of the next reference channel (mid, high), see step 1, and take the EUT's measured FS TIS and BHHR TIS on the low, mid and high-frequency reference channels into account when calculating the downlink signal power level according to Equation 6.13 in step 2.
6. Report the free-space pass/fail status of each intermediate channel listed in Appendix K.3 For both the full TIS test and the intermediate channel tests, free-space testing shall be conducted based on device type, as specified in Appendix O. Perform each test on all specified frequencies with the EUT antenna extended and retracted, as applicable.
7. If the device must be tested in the BHHR position, then move the EUT and chamber positioner(s) to the location and polarization resulting in the best-radiated BHHR sensitivity measured for the closest, in frequency, fully measured channel (low, mid, high), now used as a Reference Channel.
8. Devices which must be tested in the BHHR position shall be evaluated for intermediate channel performance using a Pass/Fail limit provided by the following formula:

EQUATION 6.14

$$\text{BHHR TIS Pass/Fail limit}_{low}\,(\text{dBm}) = \text{FS TIS Pass/Fail limit (dBm)} + (\text{EUT BHHR TIS}_{low}\,(\text{dBm}) - \text{EUT FS TIS}_{low}\,(\text{dBm}))$$

For example, if the FS TIS limit is -100 dBm, the EUT BHHR TIS $_{low}$ on the low-frequency reference channel is -99 dBm, and the EUT FS TIS $_{low}$ on the low-frequency reference channel is -104 dBm, we have:

(-100 (dBm) + (-99 (dBm) - (-104 (dBm)))) dBm = -95 dBm

In this example, -95 dBm would be the BHHR TIS Pass/Fail Limit $_{low}$ used when repeating Steps 1 through 6 above with the EUT in the BHHR position for all intermediate channels associated with the low-frequency reference channel as shown in Figure 6-1.

Similar evaluations are performed for mid and high reference channels. Note that BHHR TIS Pass/Fail limit $_{low}$, BHHR TIS Pass/Fail limit $_{mid}$ and BHHR TIS Pass/Fail limit $_{high}$ can be different.

9. Note the downlink power level which corresponds to the EUT's peak BHHR radiated sensitivity as described in Step 7 above, which will be referred to as BHHR $EIS_{(peak\ low)}$. Since the BHHR TIS Pass/Fail limit $_{low}$ is directly derived from the FS limit and the TIS difference, see Equation 6.14, the same margin M1 $_{low}$ is to be used. Adjust the digital call simulator to the RF power level calculated by the following formula:

EQUATION 6.15

$$\text{Downlink Signal Power}_{\text{low}}\,(\text{dBm}) = \text{BHHR EIS}_{(\text{peak low})}\,(\text{dBm}) + \text{M1}_{\text{low}}\,(\text{dB}) + 3\,(\text{dB})$$

For example, if the EUT's BHHR EIS(peak low) was -100 dBm on the low-frequency reference channel, the EUT's low-frequency reference channel BHHR TIS low was -96 dBm, and the BHHR TIS low limit is -92 dBm, we have:

(-100 (dBm) + 4 (dB) + 3 (dB)) dBm = -93 dBm

In this example, the signal generator would be set to -93 dBm for all intermediate channels associated with the low-frequency reference channel as shown in Figure 6-1.

Similar evaluations are performed for mid and high reference channels.

10. Without changing the RF signal level, change the frequency of the base station simulator such that it is operating on a defined intermediate channel.
11. Using the UMTS base station simulator, measure the downlink BER at a 12.2 kbps data rate using the required number of bits as described above. The measured BER must not exceed 1.2%.
12. Repeat steps 10 through 11 of this procedure for all remaining intermediate channels. If the reference channel changes from low to mid or high, move to the location and polarization of the next reference channel (mid, high), see step 7, and take the EUT's measured FS TIS and BHHR TIS on the low, mid and high-frequency reference channels into account when calculating the downlink signal power level according to Equation 6.15 in step 9.
13. Report the BHHR pass/fail status of each intermediate channel listed in Appendix K.3. For both the full TIS test and the intermediate channel tests, head/hand testing shall be conducted based on device type, as specified in Appendix O. Refer to Appendix C for head/hand testing requirements. Perform each test on all specified frequencies with the EUT antenna extended and retracted, as applicable.
14. The methodology in Step 8 shall be applied to determine the TIS Pass/Fail Limits for all non-primary mechanical modes and secondary antennas, if applicable, for the purpose of performing the intermediate channel desense test."

For the full TIS test and the intermediate channel tests, head/hand and/or free-space testing shall be conducted based on device type, as specified in Appendix O. For the intermediate channel tests, head and hand phantom and free-space test configurations shall be conducted based on device type, as specified in Appendix O. Refer to Appendix C for head/hand testing requirements. Perform each test on all specified frequencies with the EUT antenna extended and retracted, as applicable.

6.7.2 Criteria

Results shall be reported as specified in Appendix B using the figures of merit given in Appendix B.2. Reports shall include results for free-space and head/hand configurations (if applicable) across all channels measured with the EUT antenna extended and retracted.

The limits in Table 6-5 are recommended. However, they shall be used to determine the mandatory pass/fail limits for the intermediate channel desense tests.

Relative sensitivity on intermediate channels test results shall be provided in a file format equivalent to that specified in Appendix B. The reported RF level that produces a 1.2% BER for each channel shall be less than the level determined in Section 6.7.1.

TABLE 6-5 UMTS MINIMUM TIS LEVEL (IN DBM) RECOMMENDED LIMITS FOR THE PRIMARY MECHANICAL MODE[1]

Band	Device Held Up to Head for Voice (Yes/No)	Device Power Class	FS	BHHL and BHHR	HL and HR
UMTS 850	Yes[2]	3	-100	TBD	TBD
		4	-100	TBD	TBD
	No[3]	3	-100	N/A	N/A
		4	-100	N/A	N/A
UMTS 1900	Yes[2]	3	-102	TBD	TBD
		4	-102	TBD	TBD
	No[3]	3	-102	N/A	N/A
		4	-102	N/A	N/A
UMTS 2100/1700	Yes[2]	3	-105	TBD	TBD
		4	-105	TBD	TBD
	No[3]	3	-105	N/A	N/A
		4	-105	N/A	N/A

Note 1: Primary Mechanical Mode refers to device configured in preferred mode per manufacturer instructions (typically means antenna extended, fold or portrait slide open, but depends on form factor).

Note 2: "Yes" applies if the device supports voice operation in the talking position against the head in any cellular radio mode.

Note 3: "No" would be applicable to data-centric devices that are not held up against the head, e.g., embedded laptop solutions.

6.8 LTE

The TIS test procedure for LTE shall be performed using the procedure identified in Section 6.8.1 or Section 6.8.2.

6.8.1 Test Procedure without Complex Pattern Data

Receiver sensitivity measurements shall be performed using data throughput as the measurement metric. The EUT's receiver sensitivity corresponds to the minimum downlink signal power required to provide a data throughput rate greater than or equal to 95% of the maximum throughput of the reference measurement channel. Receiver sensitivity measurements shall be performed for each receiver independently, i.e., the other receivers in the EUT shall be disabled during the sensitivity search for a given receiver. Refer to Appendix A for set-up illustrations.

The conducted sensitivity of the EUT shall also be measured at the antenna connector, if available, at all frequencies and resource block (RB) allocations defined for the radiated testing. The conducted sensitivity shall be performed for each receiver independently, i.e., the opposite receiver in the EUT shall not contribute any noise during the sensitivity search for a given receiver. (The test platform may terminate the unused receiver in 50 ohms or present AWGN to the unused receiver at a power level equal to the downlink signal level presented to the receiver under test.). It is preferable that the EUT be the same as that utilized for the TIS measurements. However, if the EUT does not readily support antenna ports for conducted measurements, a separate modified EUT of the same model and version may be provided for all conducted measurements. If no connectors are available, the conducted sensitivity measurement is not required. Ideally, the conducted sensitivity measurement will be performed using the same instrumentation in an equivalent configuration as the radiated measurements in order to minimize the uncertainty involved. A different device may be used for the sensitivity measurement as long as any differences in absolute measurement accuracy are accounted for, either in corrections to the recorded sensitivity level or increased reported measurement uncertainty for the conducted measurement. Refer to Appendix A.3 for more information on conducted sensitivity measurements and cabling setups.

The LTE system simulator and EUT shall be configured per section 7.3 (Reference Sensitivity Level) of 3GPP TS 36.521-1 using the defaults specified in 3GPP TS 36.521-1 and 3GPP TS 36.508 as applicable, with the exception that all receivers in the EUT other than the receiver under test shall be disabled. For a given downlink RF power level, throughput shall be measured using the test procedure in section 7.3 of 3GPP TS 36.521-1 using the downlink and uplink reference measurement channels defined in Annexes A.2.2, A.2.3, and A.3.2 of 3GPP TS 36.521-1 and Table 6-6. For LTE Band 13, the settings in Table 6-7 shall take precedence over the settings in Annexes A.2.2, A.2.3, and A.3.2 of 3GPP TS 36.521-1. The LTE system simulator shall send continuous uplink power control “up” commands to the EUT to ensure the EUT's transmitter is at maximum output power during the sensitivity searches. The

downlink power step size shall be no more than 0.5 dB when the RF power level is near the LTE sensitivity level. The minimum RF power level resulting in a data throughput rate greater than or equal to 95% of the maximum throughput of the reference measurement channel shall be recorded as the downlink power level corresponding to the 95% throughput percentage (the data throughput rate is as defined in section 7.3 of 3GPP TS 36.521-1). Care must be taken to ensure that the duration of the throughput measurement is sufficient to achieve statistical significance according to Annex G.2 of 3GPP TS 36.521-1. The downlink signal level for each EUT test condition shall be recorded for integration pursuant to Appendix B.2 to give a single figure of merit referred to as Total Isotropic Sensitivity (TIS). TIS shall be calculated for each receiver independently.

Typically, the maximum deviation in receive level measurements from peak to null of any one channel does not exceed 30 dB. Therefore, the test facility may elect to initiate each sensitivity measurement starting with the base station power set 30 dB above the lowest sensitivity level measured in order to reduce the time required to search for the sensitivity floor. For points where this setting is below the target sensitivity level, the sensitivity may be considered negligible for that location and the initial value used in place of an actual measurement.

TIS shall be fully measured as described above and calculated pursuant to Appendix B.2. TIS measurements shall be carried out for different frequency pairs (FDD; UL -uplink /DL - downlink) or frequencies (TDD) and RB allocations across the bands supported by the EUT, as defined in Table 6-6. TIS results shall be based on total channel power.

TABLE 6-6 LTE TIS MEASUREMENTS TABLE FOR THE PRIMARY MECHANICAL MODE[1]

Band	Channel Bandwidth (MHz)	Channel	Designation	RX Frequency (MHz) [center of DL RB allocation]	UL RB Allocation	DL RB Allocation
2[2]	10	650	CH_4-RX	1935	50 RB with RBstart=0	50 RB with RBstart=0
	10	900	CH_5-RX	1960	50 RB with RBstart=0	50 RB with RBstart=0
	10	1150	CH_6-RX	1985	50 RB with RBstart=0	50 RB with RBstart=0
4	10	2000	CH_8-RX	2115	50 RB with RBstart=0	50 RB with RBstart=0
	10	2175	CH_9-RX	2132.5	50 RB with RBstart=0	50 RB with RBstart=0
	10	2350	CH_{10}-RX	2150	50 RB with RBstart=0	50 RB with RBstart=0

TABLE 6-6 LTE TIS MEASUREMENTS TABLE FOR THE PRIMARY MECHANICAL MODE[1]

Band	Channel Bandwidth (MHz)	Channel	Designation	RX Frequency (MHz) [center of DL RB allocation]	UL RB Allocation	DL RB Allocation
5[3]	10	2450	CH_1-RX	874	25 RB with RBstart=25	50 RB with RBstart=0
	10	2525	CH_2-RX	881.5	25 RB with RBstart=25	50 RB with RBstart=0
	10	2600	CH_3-RX	889	25 RB with RBstart=25	50 RB with RBstart=0
12	10	5060	CH_{11}-RX	734	20 RB with RBstart=30	50 RB with RBstart=0
	10	5130	CH_{13}-RX	741	20 RB with RBstart=30	50 RB with RBstart=0
13	10	5230	CH_{18}-RX	751	15 RB with RBstart=0	50 RB with RBstart=0
14	10	5330	CH_{21}-RX	763	20 RB with RBstart=0	50 RB with RBstart=0
17	10	5800	CH_{15}-RX	741	20 RB with RBstart=30	50 RB with RBstart=0
25[2]	5	8065	CH_{23}-RX	1932.5	25 RB with RBstart=0	25 RB with RBstart=0
	5	8365	CH_{24}-RX	1962.5	25 RB with RBstart=0	25 RB with RBstart=0
	5	8665	CH_{25}-RX	1992.5	25 RB with RBstart=0	25 RB with RBstart=0
26[3]	5	8715	CH_{29}-RX	861.5	25 RB with RBstart=0	25 RB with RBstart=0
	5	8865	CH_{30}-RX	876.5	25 RB with RBstart=0	25 RB with RBstart=0
	5	9015	CH_{31}-RX	891.5	25 RB with RBstart=0	25 RB with RBstart=0

TABLE 6-6 LTE TIS MEASUREMENTS TABLE FOR THE PRIMARY MECHANICAL MODE[1]

Band	Channel Bandwidth (MHz)	Channel	Designation	RX Frequency (MHz) [center of DL RB allocation]	UL RB Allocation	DL RB Allocation
41	20	39750	CH_{26}-TX-RX	2506	100RB with RBstart=0	100RB with RBstart=0
	20	40620	CH_{27}-TX-RX	2593	100RB with RBstart=0	100RB with RBstart=0
	20	41490	CH_{28}-TX-RX	2680	100RB with RBstart=0	100RB with RBstart=0

Note 1: Primary Mechanical Mode refers to device configured in preferred mode per manufacturer instructions (typically means antenna extended, fold or portrait slide open, but depends on form factor).

Note 2: If the device supports Band 25 and Band 2, then testing is only required to be completed in Band 25. The test requirements and data comparison between Bands 2 and 25 will not be directly comparable due to the usage of different RF channel bandwidths.

Note 3: If the device supports Band 26 and Band 5, then testing is only required to be completed in Band 26. The test requirements and data comparison between Bands 5 and 26 will not be directly comparable due to the usage of different RF channel bandwidths.

TABLE 6-7 UPLINK REFERENCE MEASUREMENT CHANNEL TABLE (UPLINK REFERENCE MEASUREMENT CHANNELS ARE PER ANNEXES A.2.2 AND A.2.3 OF 3GPP TS 36.521-1 WITH THE EXCEPTIONS NOTED IN THE TABLE FOR BAND 13)

Parameter	Unit	Value
Channel bandwidth	MHz	10
Allocated resource blocks		15
DFT-OFDM Symbols per subframe		12
Modulation		QPSK
Target Coding rate		1/3
Payload size	Bits	1320
Transport block CRC	Bits	24
Number of code blocks - C		1
Code block CRC size	Bits	0
Total number of bits per sub-frame	Bits	4320

TABLE 6-7 UPLINK REFERENCE MEASUREMENT CHANNEL TABLE (UPLINK REFERENCE MEASUREMENT CHANNELS ARE PER ANNEXES A.2.2 AND A.2.3 OF 3GPP TS 36.521-1 WITH THE EXCEPTIONS NOTED IN THE TABLE FOR BAND 13)

Parameter	Unit	Value
Total symbols per sub-frame		2160
UE Category		1-5

For the TIS test, head and hand phantom, hand phantom only and/or free-space testing shall be conducted based on device type, as specified in Appendix O. Refer to Appendix C for head/hand testing requirements. Perform each test on all specified frequencies with the EUT antenna extended and retracted, as applicable.

Note: *Head-adjacent testing is only required for LTE if the EUT supports usage against the head while utilizing an LTE airlink (e.g., VoIP).*

Intermediate channel measurements shall performed for applicable bands as detailed in Section 6.8.3.

6.8.2 Test Procedure with Complex Pattern Data

If the alternate TIS test procedure based on received signal strength (RSS) is used, the antenna pattern and receiver sensitivity shall be measured for each receiver in the EUT using the RSS procedure defined in Section 6.17. The measurement site and EUT shall be configured as specified in Appendix A. The RSS pattern measurement may also include relative phase data based on the LTE downlink reference symbols if a complex antenna pattern is requested by the operator or device vendor (use of the relative phase data is beyond the current scope of this document); otherwise relative phase may be omitted in the procedure below. If the relative phase data is included then it shall be clearly marked as supplemental in the test report. To reduce measurement uncertainty, pattern measurements shall be taken at each point on the sphere for both receivers without re-positioning. During pattern measurements, the downlink signal level shall be set to REFSENS + 45 dB where REFSENS is as defined in 3GPP TS 36.101 for the given band and channel bandwidth. Closed loop power control shall be enabled for the uplink to keep the UE transmit power at or below -10 dBm during the complex pattern measurement.The angular sampling rate for the pattern measurement shall be 15 degrees in both the theta (θ) and phi (ϕ) axes (data points are not required for theta axis values greater than 165 degrees). Upon completion of a transition from one point on the sphere to another point on the sphere, the test platform shall wait 100 ms (i.e., settling time) before considering complex antenna pattern data at the UE to be valid.

Note: *Although outside the scope of this test plan, it is recommended that devices submitted for LTE TIS testing using RSS procedures meet the following requirements. For LTE, RSSI shall be as defined in section 5.1.3 of 3GPP TS 36.214. For each receiver, the UE shall*

average RSSI measurements across at least one subframe but not more than 10 subframes. The absolute accuracy of RSSI measurements shall be +/- 6 dB or better (i.e. same requirement as for RSRP in 3GPP TS 36.133). If complex antenna pattern data is requested by the operator or device vendor, the UE shall measure the relative phase (i.e. the phase difference between the two receivers) based on the I-Q values for the reference symbols; otherwise relative phase may be omitted. The UE shall average the relative phase measurements across all the reference symbols in at least one subframe but not more than 10 subframes. The relative phase accuracy (i.e. the accuracy of the phase difference between the two receivers) shall be +/- 2 degrees or better. The UE shall simultaneously compute RSSI for both receivers and relative phase between the receivers (for a given point on the sphere) over the same period of time. The UE shall average all RSSI and relative phase measurements over the same time interval.

The RSS pattern data shall be linearized using the procedure in Section 6.17.2.

The sensitivity search in Section 6.17.3 shall be performed for each receiver independently, i.e., the other receivers in the EUT shall be disabled during the sensitivity search for a given receiver. Receiver sensitivity measurements shall be performed using the LTE system simulator to determine the EUT's receiver sensitivity by reporting the minimum downlink power resulting in a data throughput rate that is greater than or equal to 95% of the maximum throughput of the reference measurement channel (the data throughput rate is as defined in section 7.3 of 3GPP TS 36.521-1). The LTE system simulator and EUT shall be configured per section 7.3 (Reference Sensitivity Level) of 3GPP TS 36.521-1 using the defaults specified in 3GPP TS 36.521-1 and 3GPP TS 36.508 as applicable with the exception that all receivers in the EUT other than the receiver under test shall be disabled. For a given downlink RF power level, throughput shall be measured using the test procedure in section 7.3 of 3GPP TS 36.521-1 using the downlink and uplink reference measurement channels defined in Annexes A.2.2, A.2.3, and A.3.2 of 3GPP TS 36.521-1 and Table 6-6. For LTE Band 13, the settings in Table 6-7 shall take precedence over the settings in Annexes A.2.2, A.2.3, and A.3.2 of 3GPP TS 36.521-1. The LTE system simulator shall send continuous uplink power control “up” commands to the EUT to insure the EUT's transmitter is at maximum output power during the sensitivity searches. The downlink power step size shall be no more than 0.5 dB when the RF power level is near the LTE sensitivity level. The minimum RF power level resulting in a data throughput rate greater than or equal to 95% of the maximum throughput of the reference measurement channel shall serve as the sensitivity measurement for that antenna position (the data throughput rate is as defined in section 7.3 of 3GPP TS 36.521-1). Care must be taken to ensure that the duration of the throughput measurement is sufficient to achieve statistical significance according to Annex G.2 of 3GPP TS 36.521-1 for each EUT test condition. TIS shall be calculated for each receiver using the procedure in Section 6.17.6.

The conducted sensitivity of the EUT shall also be measured at the antenna connectors, if available, at all frequencies and RB allocations defined for the radiated testing. The conducted sensitivity shall be performed for each receiver independently, i.e., the other receivers in the EUT shall not contribute any noise during the sensitivity search for a given receiver (The test platform may terminate the unused receiver in 50 ohms or present AWGN to the unused receiver at a power level equal to the downlink signal level presented to the receiver under test.). It is preferable that the EUT be the same as that utilized for the TIS measurements.

However, if the EUT does not readily support antenna ports for conducted measurements, a separate modified EUT of the same model and version may be provided for all conducted measurements. If no connectors are available, the conducted sensitivity measurement is not required. Ideally, the conducted sensitivity measurement will be performed with the same instrumentation as that used during radiated measurements (in an equivalent configuration) to minimize the measurement uncertainty involved. A different device may be used for the sensitivity measurement device as long as any differences in absolute measurement accuracy are accounted for, either in corrections to the recorded sensitivity level or increased reported measurement uncertainty for the conducted measurement. Refer to Appendix A.3 for more information on conducted sensitivity measurements and cabling setups.

Pattern measurements shall be carried out for different frequency pairs and RB allocations across the bands supported by the EUT, as defined in Table 6-6. TIS measurements shall be carried out for different frequency pairs and RB allocations across the bands supported by the EUT, as defined in Table 6-6. TIS results shall be based on total channel power.

For the TIS test, head and hand phantom, hand phantom only and/or free-space testing shall be conducted based on device type, as specified in Appendix O. Refer to Appendix C for head/hand testing requirements. Perform each test on all specified frequencies with the EUT antenna extended and retracted, as applicable.

Note: *Head-adjacent testing is only required for LTE if the EUT supports usage against the head while utilizing an LTE airlink (e.g., VoIP).*

Intermediate channel measurements shall performed for applicable bands as detailed in Section 6.8.3.

6.8.3 LTE Intermediate Channel Measurements

Relative sensitivity measurements are not required in all bands. Bands for which intermediate channel measurements apply and the test frequencies to be used are specified in Appendix K.4.

Note: *There are no LTE TIS limits defined. The following procedure is not applicable; see Appendix O.7.1 for details.*

Procedure for measuring relative sensitivity on intermediate channels (refer Figure 6-1):

1. Move the EUT and chamber positioner(s) to the location & polarization resulting in the best-radiated free-space sensitivity measured for the closest, in frequency, fully measured channel (low, mid, high), now used as a Reference Channel.
2. Note the downlink power level which corresponds to the EUT's peak free-space radiated sensitivity as described in Step 1 above, which will be referred to as FS $EIS_{(peak\ low)}$. Next, determine the margin, $M1_{low}$, in dB, between the EUT's measured TIS and the corresponding TIS limit in Table 6-8. If the device doesn't

meet the required TIS limit, then set $M1_{low}$=0. Adjust the digital call simulator to the RF power level calculated by the following formula:

EQUATION 6.16

$$\text{Downlink Signal Power}_{low}\ (\text{dBm}) = \text{FS EIS}_{(\text{peak low})}\ (\text{dBm}) + M1_{low}\ (\text{dB}) + 3\ (\text{dB})$$

For example, if the EUT's FS $EIS_{(peak\ low)}$ was -108 dBm on the low-frequency reference channel, the EUT's low-frequency reference channel FS TIS_{low} was -104 dBm, and the FS TIS limit is -100 dBm, we have:

(-108 (dBm) + 4 (dB) + 3 (dB)) dBm = -101 dBm

In this example, the signal generator would be set to -101 dBm for all intermediate channels associated with the low-frequency reference channel as shown in Figure 6-1.

Similar evaluations are performed for mid and high reference channels. Note that $M1_{low}$, $M1_{mid}$, and $M1_{high}$ can vary depending on how much the FS TIS of each channel exceeds the FS TIS limit.

3. Without changing the RF signal level at the EUT, change the frequency of the base station simulator such that it is operating on a defined intermediate channel.

4. Throughput of the EUT shall be measured using the test procedure in section 7.3 of 3GPP TS 36.521-1 using the downlink and uplink reference measurement channels defined in Annexes A.2.2, A.2.3, and A.3.2 of 3GPP TS 36.521-1 and Table 6-13 of this document with the exception that all receivers in the EUT other than the receiver under test shall be disabled (the data throughput rate is as defined in section 7.3 of 3GPP TS 36.521-1). The LTE system simulator shall send continuous uplink power control “up” commands to the EUT to ensure the EUT's transmitter is at maximum output power. The measured throughput rate shall be greater than or equal to 95% of the maximum throughput of the reference measurement channel. Care must be taken to ensure that the duration of the throughput measurement is sufficient to achieve statistical significance according to Annex G.2 of 3GPP TS 36.521-1.

5. Repeat steps 3 through 4 of this procedure for all remaining intermediate channels. If the reference channel changes from low to mid or high, move to the location and polarization of the next reference channel (mid, high), see step 1, and take the EUT's measured FS TIS and BHHR TIS on the low, mid and high-frequency reference channels into account when calculating the downlink signal power level according to Equation 6.16 in step 2.

6. Report the free-space pass/fail status of each intermediate channel listed in Appendix K.4 For both the full TIS test and the intermediate channel tests, free-space testing shall be conducted based on device type, as specified in Appendix O. Perform each test on all specified frequencies with the EUT antenna extended and retracted, as applicable.

7. If the device must be tested in the BHHR position, then move the EUT and chamber positioner(s) to the location and polarization resulting in the best-radiated BHHR sensitivity measured for the closest, in frequency, fully measured channel (low, mid, high), now used as a Reference Channel.
8. Devices which must be tested in the BHHR position shall be evaluated for intermediate channel performance using a Pass/Fail limit provided by the following formula:

EQUATION 6.17

$$\text{BHHR TIS Pass/Fail limit}_{low}\text{ (dBm)} = \text{FS TIS Pass/Fail limit (dBm)} + (\text{EUT BHHR TIS}_{low}\text{ (dBm)} - \text{EUT FS TIS}_{low}\text{ (dBm)})$$

For example, if the FS TIS limit is -100 dBm, the EUT BHHR TIS $_{low}$ on the low-frequency reference channel is -99 dBm, and the EUT FS TIS $_{low}$ on the low-frequency reference channel is -104 dBm, we have:

(-100 (dBm) + (-99 (dBm) - (-104 (dBm)))) dBm = -95 dBm

In this example, -95 dBm would be the BHHR TIS Pass/Fail Limit $_{low}$ used when repeating Steps 1 through 6 above with the EUT in the BHHR position for all intermediate channels associated with the low-frequency reference channel as shown in Figure 6-1.

Similar evaluations are performed for mid and high reference channels. Note that BHHR TIS Pass/Fail limit $_{low}$, BHHR TIS Pass/Fail limit $_{mid}$ and BHHR TIS Pass/Fail limit $_{high}$ can be different.

9. Note the downlink power level which corresponds to the EUT's peak BHHR radiated sensitivity as described in Step 7 above, which will be referred to as BHHR EIS$_{(peak\ low)}$. Since the BHHR TIS Pass/Fail limit $_{low}$ is directly derived from the FS limit and the TIS difference, see Equation 6.17, the same margin M1 $_{low}$ is to be used. Adjust the digital call simulator to the RF power level calculated by the following formula:

EQUATION 6.18

$$\text{Downlink Signal Power}_{low}\text{ (dBm)} = \text{BHHR EIS}_{(peak\ low)}\text{ (dBm)} + \text{M1}_{low}\text{ (dB)} + 3\text{ (dB)}$$

For example, if the EUT's BHHR EIS(peak low) was -100 dBm on the low-frequency reference channel, the EUT's low-frequency reference channel BHHR TIS low was -96 dBm, and the BHHR TIS low limit is -92 dBm, we have:

(-100 (dBm) + 4 (dB) + 3 (dB)) dBm = -93 dBm

In this example, the signal generator would be set to -93 dBm for all intermediate channels associated with the low-frequency reference channel as shown in Figure 6-1.

Similar evaluations are performed for mid and high reference channels.

10. Without changing the RF signal level, change the frequency of the base station simulator such that it is operating on a defined intermediate channel.
11. Throughput of the EUT shall be measured using the test procedure in section 7.3 of 3GPP TS 36.521-1 using the downlink and uplink reference measurement channels defined in Annexes A.2.2, A.2.3, and A.3.2 of 3GPP TS 36.521-1 and Table 6-13 of this document with the exception that all receivers in the EUT other than the receiver under test shall be disabled (the data throughput rate is as defined in section 7.3 of 3GPP TS 36.521-1). The LTE system simulator shall send continuous uplink power control "up" commands to the EUT to ensure the EUT's transmitter is at maximum output power. The measured throughput rate shall be greater than or equal to 95% of the maximum throughput of the reference measurement channel. Care must be taken to ensure that the duration of the throughput measurement is sufficient to achieve statistical significance according to Annex G.2 of 3GPP TS 36.521-1.
12. Repeat steps 10 through 11 of this procedure for all remaining intermediate channels. If the reference channel changes from low to mid or high, move to the location and polarization of the next reference channel (mid, high), see step 7, and take the EUT's measured FS TIS and BHHR TIS on the low, mid and high-frequency reference channels into account when calculating the downlink signal power level according to Equation 6.18 in step 9.
13. Report the BHHR pass/fail status of each intermediate channel listed in Appendix K.4. For both the full TIS test and the intermediate channel tests, head/hand testing shall be conducted based on device type, as specified in Appendix O. Refer to Appendix C for head/hand testing requirements. Perform each test on all specified frequencies with the EUT antenna extended and retracted, as applicable.
14. The methodology in Step 8 shall be applied to determine the TIS Pass/Fail Limits for all non-primary mechanical modes and secondary antennas, if applicable, for the purpose of performing the intermediate channel desense test.

For the intermediate channel tests, head and hand phantom and free-space test configurations shall be conducted based on device type, as specified in Appendix O. Refer to Appendix C for head/hand testing requirements

Perform each test on all specified frequencies with the EUT antenna extended and retracted, as applicable.

Note: *Head-adjacent testing is only required for LTE if the EUT supports usage against the head while utilizing an LTE airlink (e.g., VoIP).*

6.8.4 Criteria

Results shall be reported as specified in Appendix B using the figures of merit given in Appendix B.2. Reports shall include results for free-space and head/hand configurations (if applicable) across all channels measured with the EUT antenna extended and retracted.

The better antenna between the two receiving antennas is always identified as the primary antenna, and the weaker antenna is the secondary antenna. The manufacturer shall identify one antenna as "a" and the other antenna as "b". When either the "a" or "b" antennas is activated dynamically, then the manufacturer must identify this antenna as being active dynamically and include this information in the test report. Antenna "a" or "b" shall be identified as the primary antenna for all test cases having a primary and secondary antenna. The antenna used for transmitting shall be identified as "a", "b" or "other".

The branch power difference (BPD) in dB is defined as the TIS of the secondary antenna in dBm minus the TIS of the primary antenna in dBm.

Relative sensitivity on intermediate channels test results shall be provided for both primary and secondary antennas in a file format equivalent to that specified in Appendix B.

The branch power difference for each LTE band shall not exceed the values in Table 6-8.

TABLE 6-8 LTE MAXIMUM TIS LEVEL FOR PRIMARY/SECONDARY ANTENNAS (IN DBM) AND BRANCH POWER DIFFERENCE (IN DB) REQUIREMENTS FOR THE PRIMARY MECHANICAL MODE[1]

Band	Device Held Up to Head for Voice (Yes/No)	FS			BHHL and BHHR			HL and HR		
		Primary Antenna (dBm)	Secondary Antenna (dBm)	BPD (dB)	Primary Antenna (dBm)	Secondary Antenna (dBm)	BPD (dB)	Primary Antenna (dBm)	Secondary Antenna (dBm)	BPD (dB)
LTE Band 12	Yes[2]	TBD	TBD	TBD	TBD	TBD	TBD	TBD	TBD	TBD
	No[3]	TBD	TBD	TBD	N/A	N/A	N/A	N/A	N/A	N/A
LTE Band 17	Yes[2]	TBD	TBD	TBD	TBD	TBD	TBD	TBD	TBD	TBD
	No[3]	TBD	TBD	TBD	N/A	N/A	N/A	N/A	N/A	N/A
LTE Band 13	Yes[2]	TBD	TBD	TBD	TBD	TBD	TBD	TBD	TBD	TBD
	No[3]	TBD	TBD	TBD	N/A	N/A	N/A	N/A	N/A	N/A
LTE Band 14	Yes[2]	TBD	TBD	TBD	TBD	TBD	TBD	TBD	TBD	TBD
	No[3]	TBD	TBD	TBD	N/A	N/A	N/A	N/A	N/A	N/A
LTE Band 26	Yes[2]	TBD	TBD	TBD	TBD	TBD	TBD	TBD	TBD	TBD
	No[3]	TBD	TBD	TBD	N/A	N/A	N/A	N/A	N/A	N/A
LTE Band 5	Yes[2]	TBD	TBD	TBD	TBD	TBD	TBD	TBD	TBD	TBD
	No[3]	TBD	TBD	TBD	N/A	N/A	N/A	N/A	N/A	N/A

TABLE 6-8 LTE MAXIMUM TIS LEVEL FOR PRIMARY/SECONDARY ANTENNAS (IN DBM) AND BRANCH POWER DIFFERENCE (IN DB) REQUIREMENTS FOR THE PRIMARY MECHANICAL MODE[1]

Band	Device Held Up to Head for Voice (Yes/No)	FS			BHHL and BHHR			HL and HR		
		Primary Antenna (dBm)	Secondary Antenna (dBm)	BPD (dB)	Primary Antenna (dBm)	Secondary Antenna (dBm)	BPD (dB)	Primary Antenna (dBm)	Secondary Antenna (dBm)	BPD (dB)
LTE Band 2	Yes[2]	TBD	TBD	TBD	TBD	TBD	TBD	TBD	TBD	TBD
	No[3]	TBD	TBD	TBD	N/A	N/A	N/A	N/A	N/A	N/A
LTE Band 25	Yes[2]	TBD	TBD	TBD	TBD	TBD	TBD	TBD	TBD	TBD
	No[3]	TBD	TBD	TBD	N/A	N/A	N/A	N/A	N/A	N/A
LTE Band 4	Yes[2]	TBD	TBD	TBD	TBD	TBD	TBD	TBD	TBD	TBD
	No[3]	TBD	TBD	TBD	N/A	N/A	N/A	N/A	N/A	N/A
LTE Band 41	Yes[2]	TBD	TBD	TBD	TBD	TBD	TBD	TBD	TBD	TBD
	No[3]	TBD	TBD	TBD	N/A	N/A	N/A	N/A	N/A	N/A

Note 1: Primary Mechanical Mode refers to device configured in preferred mode per manufacturer instructions (typically means antenna extended, fold or portrait slide open, but depends on form factor).

Note 2: "Yes" applies if the device supports voice operation in the talking position against the head in any cellular radio mode.

Note 3: "No" would be applicable to data-centric devices that are not held up against the head, e.g., embedded laptop solutions.

6.9 CDMA 1xEV-DO DATA

6.9.1 Test Procedure

Receiver Sensitivity measurements shall be performed using the Base Station Simulator to determine the EUT's receiver sensitivity by reporting the minimum forward-link power resulting in a Packet Error Rate (PER) of 0.5% or less with 95% confidence. Refer to Appendix A for set-up illustrations.

The conducted sensitivity of the EUT shall also be measured at the antenna connector, if available, at all applicable frequencies. It is preferable that the EUT be the same as utilized for the TIS measurements. However, if the EUT does not readily support an antenna port for conducted measurements, a separate modified EUT may be provided for all conducted measurements. If no connector is available, the conducted sensitivity measurement is not required. Ideally, the sensitivity measurement will be performed with the same instrumentation in an equivalent configuration in order to minimize the measurement uncertainty involved. A different sensitivity measurement device may be used as long as any differences in absolute measurement accuracy are accounted for, either in corrections to the recorded sensitivity level or increased reported measurement uncertainty for the conducted

measurement. Refer to Appendix A.3 for more information on conducted sensitivity measurements and cabling setups.

The set-up parameters defined in Section 5.9 shall be used with the following exceptions:

a. Forward-Link Power: As needed to maintain 0% PER.

b. Power Control: Closed Loop.

c. If the EUT supports 1xEV-DO Rev. A, then 1xEV-DO Rev. A shall be used for this test and the CDMA 1xEV-DO test parameters shall be set according to TIA-866-A paragraph 3.3.1 (subtype 2 physical layer) for the Receiver Sensitivity test and to the applicable defaults specified in TIA-866-A section 8. If the EUT does not support 1xEV-DO Rev. A, then 1xEV-DO Rev. 0 shall be used for this test and the CDMA 1xEV-DO test parameters shall be set according to TIA-866-1 paragraph 3.1.1.3.1 for the Receiver Sensitivity test and to the applicable defaults specified in TIA-866-1 section 11.

Note: *If the test point is occurring in a significant null, the forward-link power may have to be raised to establish/maintain a call.*

Page the EUT and direct it to one of the reference test channels. With a digital voice/traffic channel established, invoke a PER Measurement.

Sensitivity measurements shall be equivalent to the minimum RF power level that results in a PER of 0.5% or less with 95% confidence at each measured location on the sphere. The algorithms/methods used to arrive at these results can be optimized for speed by finding alternate points on the PER curve as long as the data is eventually normalized to a data set equivalent to 0.5% or less at each data point. Alternative points on the PER curve greater than 2% shall not be used. The normalization value shall be determined in the same test configuration used to make the other PER measurements (i.e., over-the-air, CDMA set-up parameters, etc.) and shall be derived from an actual sensitivity measurement of 0.5% PER or less with 95% confidence and not an interpolation. In either case, the appropriate contribution to the measurement uncertainty shall be included. Refer to Section 6.15 for details on this procedure and Section 7.4 for details on this measurement uncertainty. The number of packets observed shall be consistent with a 95% confidence level but may be limited to 500 packets maximum at 2% PER and to 2000 packets maximum at 0.5% PER. For PER's in between these two points, the maximum number of packets shall be scaled proportionally. The forward-link power step size shall be no more than 0.5 dB when the RF power level is near the CDMA sensitivity level. The Power Control setting shall be changed to Always Up when the final sensitivity measurement is made for each test point. The Forward-Link Power and the Power Control settings should be set back to defaults prior to tuning to the next test point. The minimum RF power level resulting in a PER of 0.5% or less for each EUT test condition shall be recorded for integration pursuant to Appendix B.2 to give a single figure of merit referred to as Total Isotropic Sensitivity (TIS).

Typically, the maximum deviation in RX level measurements from peak to null of any one channel does not exceed 30 dB. Therefore, the test facility may elect to initiate each

sensitivity measurement starting with the base station power set 30 dB above the lowest sensitivity level measured in order to reduce the time required to search for the sensitivity floor. For points where this setting is below the target sensitivity level, the sensitivity may be considered negligible for that location and the initial value used in place of an actual measurement.

TIS shall be fully measured as described above and calculated pursuant to Appendix B.2 for the three channels (low, middle and high) specified in Section 5 for all frequency bands supported by the EUT and required to be tested per this test plan.

Relative sensitivity measurements shall be repeated on a specified list of intermediate channels as shown in Appendix K.1**.** The separation between channels is no greater than 500 kHz, and the intermediate channels are spaced off of the center channel.

Procedure for measuring relative sensitivity on intermediate channels (refer to Figure 6-1):

1. Move the EUT and chamber positioner(s) to the location & polarization resulting in the best-radiated free-space sensitivity measured for the closest, in frequency, fully measured channel (low, mid, high), now used as a Reference Channel.
2. Note the downlink power level which corresponds to the EUT's peak free-space radiated sensitivity as described in Step 1 above, which will be referred to as FS $EIS_{(peak\ low)}$. Next, determine the margin, $M1_{low}$, in dB, between the EUT's measured TIS and the corresponding TIS limit Table 6-9. If the device doesn't meet the required TIS limit, then set $M1_{low}$=0. Adjust the digital call simulator to the RF power level calculated by the following formula:

EQUATION 6.19

$$\text{Downlink Signal Power}_{low}\ (\text{dBm}) = \text{FS EIS}_{(peak\ low)}\ (\text{dBm}) + \text{M1}_{low}\ (\text{dB}) + 3\ (\text{dB})$$

For example, if the EUT's FS $EIS_{(peak\ low)}$ was -108 dBm on the low-frequency reference channel, the EUT's low-frequency reference channel FS TIS_{low} was -104 dBm, and the FS TIS limit is -100 dBm, we have:

(-108 (dBm) + 4 (dB) + 3 (dB)) dBm = -101 dBm

In this example, the signal generator would be set to -101 dBm for all intermediate channels associated with the low-frequency reference channel as shown in Figure 6-1.

Similar evaluations are performed for mid and high reference channels. Note that $M1_{low}$, $M1_{mid}$, and $M1_{high}$ can vary depending on how much the FS TIS of each channel exceeds the FS TIS limit.

3. Without changing the RF signal level at the EUT, change the frequency of the base station simulator such that it is operating on a defined intermediate channel.
4. Using the base station simulator, measure the PER using the required number of packets as described above. The measured PER must not exceed 0.5%.

5. Repeat steps 3 through 4 of this procedure for all remaining intermediate channels. If the reference channel changes from low to mid or high, move to the location and polarization of the next reference channel (mid, high), see step 1, and take the EUT's measured FS TIS and BHHR TIS on the low, mid and high-frequency reference channels into account when calculating the downlink signal power level according to Equation 6.19 in step 2.
6. Report the free-space pass/fail status of each intermediate channel listed in Appendix K.1 For both the full TIS test and the intermediate channel tests, free-space testing shall be conducted based on device type, as specified in Appendix O. Perform each test on all specified frequencies with the EUT antenna extended and retracted, as applicable.
7. If the device must be tested in the BHHR position, then move the EUT and chamber positioner(s) to the location and polarization resulting in the best-radiated BHHR sensitivity measured for the closest, in frequency, fully measured channel (low, mid, high), now used as a Reference Channel.
8. Devices which must be tested in the BHHR position shall be evaluated for intermediate channel performance using a Pass/Fail limit provided by the following formula:

EQUATION 6.20

$$\text{BHHR TIS Pass/Fail limit}_{low}\text{ (dBm)} = \text{FS TIS Pass/Fail limit (dBm)} + (\text{EUT BHHR TIS}_{low}\text{ (dBm)} - \text{EUT FS TIS}_{low}\text{ (dBm)})$$

For example, if the FS TIS limit is -100 dBm, the EUT BHHR TIS $_{low}$ on the low-frequency reference channel is -99 dBm, and the EUT FS TIS $_{low}$ on the low-frequency reference channel is -104 dBm, we have:

(-100 (dBm) + (-99 (dBm) - (-104 (dBm)))) dBm = -95 dBm

In this example, -95 dBm would be the BHHR TIS Pass/Fail Limit $_{low}$ used when repeating Steps 1 through 6 above with the EUT in the BHHR position for all intermediate channels associated with the low-frequency reference channel as shown in Figure 6-1.

Similar evaluations are performed for mid and high reference channels. Note that BHHR TIS Pass/Fail limit $_{low}$, BHHR TIS Pass/Fail limit $_{mid}$ and BHHR TIS Pass/Fail limit $_{high}$ can be different.

9. Note the downlink power level which corresponds to the EUT's peak BHHR radiated sensitivity as described in Step 7 above, which will be referred to as BHHR EIS$_{(peak\ low)}$. Since the BHHR TIS Pass/Fail limit $_{low}$ is directly derived from the FS limit and the TIS difference, see Equation 6.20, the same margin M1 $_{low}$ is to be used. Adjust the digital call simulator to the RF power level calculated by the following formula:

EQUATION 6.21

$$\text{Downlink Signal Power}_{low}\text{ (dBm)} = \text{BHHR EIS}_{(peak\ low)}\text{ (dBm)} + \text{M1}_{low}\text{ (dB)} + 3\text{ (dB)}$$

For example, if the EUT's BHHR EIS(peak low) was -100 dBm on the low-frequency reference channel, the EUT's low-frequency reference channel BHHR TIS low was -96 dBm, and the BHHR TIS low limit is -92 dBm, we have:

(-100 (dBm) + 4 (dB) + 3 (dB)) dBm = -93 dBm

In this example, the signal generator would be set to -93 dBm for all intermediate channels associated with the low-frequency reference channel as shown in Figure 6-1.

Similar evaluations are performed for mid and high reference channels.

10. Without changing the RF signal level, change the frequency of the base station simulator such that it is operating on a defined intermediate channel.
11. Using the base station simulator, measure the PER using the required number of packets as described above. The measured PER must not exceed 0.5%.
12. Repeat steps 10 through 11 of this procedure for all remaining intermediate channels. If the reference channel changes from low to mid or high, move to the location and polarization of the next reference channel (mid, high), see step 7, and take the EUT's measured FS TIS and BHHR TIS on the low, mid and high-frequency reference channels into account when calculating the downlink signal power level according to Equation 6.21 in step 9.
13. Report the BHHR pass/fail status of each intermediate channel listed in Appendix K.1. For both the full TIS test and the intermediate channel tests, head/hand testing shall be conducted based on device type, as specified in Appendix O. Refer to Appendix C for head/hand testing requirements. Perform each test on all specified frequencies with the EUT antenna extended and retracted, as applicable.
14. The methodology in Step 8 shall be applied to determine the TIS Pass/Fail Limits for all non-primary mechanical modes and secondary antennas, if applicable, for the purpose of performing the intermediate channel desense test.

For the full TIS test, head/hand and/or free-space testing shall be conducted based on device type, as specified in Appendix O. For the intermediate channel tests, head and hand phantom and free-space test configurations shall be conducted based on device type, as specified in Appendix O. Refer to Appendix C for head/hand testing requirements. Perform each test on all specified frequencies with the EUT antenna extended and retracted, as applicable.

Note: *Head-adjacent testing is only required for CDMA 1xEV-DO data if the EUT supports usage against the head in this mode (e.g., VoIP).*

Intermediate channel tests are not required if intermediate channel tests are passed in CDMA or CDMA 1x RTT data for the same frequency bands.

6.9.2 Criteria

Results shall be reported as specified in Appendix B using the figures of merit given in Appendix B.2. Reports shall include results for free-space and head/hand configurations (if applicable) across all channels measured with the EUT antenna extended and retracted.

Relative sensitivity on intermediate channels test results shall be provided in a file format equivalent to that specified in Appendix B.

TABLE 6-9 CDMA 1XEV-DO DATA MAXIMUM TIS LEVEL (IN DBM) REQUIREMENTS FOR THE PRIMARY MECHANICAL MODE[1]

Band	Device Held Up to Head for Voice (Yes/No)	Antenna Type	FS	BHHL and BHHR	HL and HR
CDMA 1xEV-DO DATA 800	Yes[2]	Embedded	-102.5	TBD	TBD
		Stub or Retractable	-102.5	TBD	TBD
	No[3]	All	-102.5	N/A	N/A
CDMA 1xEV-DO DATA 1900	Yes[2]	Embedded	-102.5	TBD	TBD
		Stub or Retractable	-102.5	TBD	TBD
	No[3]	All	-102.5	N/A	N/A
CDMA 1xEV-DO DATA 2100/1700	Yes[2]	Embedded	-102.5	TBD	TBD
		Stub or Retractable	-102.5	TBD	TBD
	No[3]	All	-102.5	N/A	N/A

Note 1: Primary Mechanical Mode refers to device configured in preferred mode per manufacturer instructions (typically means antenna extended, fold or portrait slide open, but depends on form factor).

Note 2: "Yes" applies if the device supports voice operation in the talking position against the head in any cellular radio mode.

Note 3: "No" would be applicable to data-centric devices that are not held up against the head, e.g., embedded laptop solutions.

6.10 CDMA 1xRTT DATA

6.10.1 Test Procedure

Receiver Sensitivity measurements shall be performed using the Base Station Simulator to determine the EUT's receiver sensitivity by reporting the minimum forward-link power

resulting in a Frame Error Rate (FER) of 0.5% or less with 95% confidence. Refer to Appendix A for set-up illustrations.

The conducted sensitivity of the EUT shall also be measured at the antenna connector, if available, at all applicable frequencies. It is preferable that the EUT be the same as utilized for the TIS measurements. However, if the EUT does not readily support an antenna port for conducted measurements, a separate modified EUT may be provided for all conducted measurements. If no connector is available, the conducted sensitivity measurement is not required. Ideally, the sensitivity measurement will be performed with the same instrumentation in an equivalent configuration in order to minimize the measurement uncertainty involved. A different sensitivity measurement device may be used as long as any differences in absolute measurement accuracy are accounted for, either in corrections to the recorded sensitivity level or increased reported measurement uncertainty for the conducted measurement. Refer to Appendix A.3 for more information on conducted sensitivity measurements and cabling setups.

The set-up parameters defined in Section 5.10 shall be used with the following exceptions:

a. Forward-Link Power: As needed to maintain 0% FER

b. Power Control: Closed Loop

c. All other parameters shall be set according to TIA-98-E paragraph 3.5.1 for the Fundamental Channel Receiver Sensitivity test and to the defaults specified in TIA-98-E paragraph 6.5.2.

Note: *If the test point is occurring in a significant null, the forward-link power may have to be raised to establish/maintain a call.*

Page the EUT and direct it to one of the reference test channels. With a digital voice/traffic channel established, invoke an FER Measurement.

Sensitivity measurements shall be equivalent to the minimum RF power level that results in an FER of 0.5% or less with 95% confidence at each measured location on the sphere. The algorithms/methods used to arrive at these results can be optimized for speed by finding alternate points on the FER curve as long as the data is eventually normalized to a data set equivalent to 0.5% or less at each data point. Alternative points on the FER curve greater than 2% shall not be used. The normalization value shall be determined in the same test configuration used to make the other FER measurements (i.e. over-the-air, CDMA set-up parameters, etc.) and shall be derived from an actual sensitivity measurement of 0.5% FER or less with 95% confidence and not an interpolation. In either case, the appropriate contribution to the measurement uncertainty shall be included. Refer to Section 6.15 for details on this procedure and Section 7.4 for details on this measurement uncertainty. The number of frames observed shall be consistent with a 95% confidence level but may be limited to 500 frames maximum at 2% FER and to 2000 frames maximum at 0.5% FER. For FER's in between these two points, the maximum number of frames shall be scaled proportionally. The forward-link power step size shall be no more than 0.5dB when the RF power level is near the CDMA sensitivity level. The Power Control setting shall be changed to Always Up when the final

sensitivity measurement is made for each test point. The Forward-Link Power and the Power Control settings should be set back to defaults prior to tuning to the next test point. The minimum RF power level resulting in an FER of 0.5% or less for each EUT test condition shall be recorded for integration pursuant to Appendix B.2 to give a single figure of merit referred to as Total Isotropic Sensitivity (TIS).

Typically, the maximum deviation in RX level measurements from peak to null of any one channel does not exceed 30 dB. Therefore, the test facility may elect to initiate each sensitivity measurement starting with the base station power set 30 dB above the lowest sensitivity level measured in order to reduce the time required to search for the sensitivity floor. For points where this setting is below the target sensitivity level, the sensitivity may be considered negligible for that location and the initial value used in place of an actual measurement.

TIS shall be fully measured as described above and calculated pursuant to Appendix B.2 for the three channels (low, middle and high) specified in Section 5 for all frequency bands supported by the EUT and required to be tested per this test plan.

Relative sensitivity measurements shall be repeated on a specified list of intermediate channels as shown in Appendix K.1. The separation between channels is no greater than 500 kHz, and the intermediate channels are spaced off of the center channel.

Procedure for measuring relative sensitivity on intermediate channels (refer to Figure 6-1):

1. Move the EUT and chamber positioner(s) to the location & polarization resulting in the best-radiated free-space sensitivity measured for the closest, in frequency, fully measured channel (low, mid, high), now used as a Reference Channel.
2. Note the downlink power level which corresponds to the EUT's peak free-space radiated sensitivity as described in Step 1 above, which will be referred to as FS $EIS_{(peak\ low)}$. Next, determine the margin, $M1_{low}$, in dB, between the EUT's measured TIS and the corresponding TIS limit in Table 6-10. If the device doesn't meet the required TIS limit, then set $M1_{low}=0$. Adjust the digital call simulator to the RF power level calculated by the following formula:

EQUATION 6.22

$$\text{Downlink Signal Power}_{low}\ (\text{dBm}) = \text{FS EIS}_{(peak\ low)}\ (\text{dBm}) + \text{M1}_{low}\ (\text{dB}) + 3\ (\text{dB})$$

For example, if the EUT's FS $EIS_{(peak\ low)}$ was -108 dBm on the low-frequency reference channel, the EUT's low-frequency reference channel FS TIS_{low} was -104 dBm, and the FS TIS limit is -100 dBm, we have:

(-108 (dBm) + 4 (dB) + 3 (dB)) dBm = -101 dBm

In this example, the signal generator would be set to -101 dBm for all intermediate channels associated with the low-frequency reference channel as shown in Figure 6-1.

Similar evaluations are performed for mid and high reference channels. Note that $M1_{low}$, $M1_{mid}$, and $M1_{high}$ can vary depending on how much the FS TIS of each channel exceeds the FS TIS limit.

3. Without changing the RF signal level at the EUT, change the frequency of the base station simulator such that it is operating on a defined intermediate channel.
4. Using the base station simulator, measure the FER using the required number of frames as described above. The measured FER must not exceed 0.5%.
5. Repeat steps 3 through 4 of this procedure for all remaining intermediate channels. If the reference channel changes from low to mid or high, move to the location and polarization of the next reference channel (mid, high), see step 1, and take the EUT's measured FS TIS and BHHR TIS on the low, mid and high-frequency reference channels into account when calculating the downlink signal power level according to Equation 6.22 in step 2.
6. Report the free-space pass/fail status of each intermediate channel listed in Appendix K.1 For both the full TIS test and the intermediate channel tests, free-space testing shall be conducted based on device type, as specified in Appendix O. Perform each test on all specified frequencies with the EUT antenna extended and retracted, as applicable.
7. If the device must be tested in the BHHR position, then move the EUT and chamber positioner(s) to the location and polarization resulting in the best-radiated BHHR sensitivity measured for the closest, in frequency, fully measured channel (low, mid, high), now used as a Reference Channel.
8. Devices which must be tested in the BHHR position shall be evaluated for intermediate channel performance using a Pass/Fail limit provided by the following formula:

EQUATION 6.23

$$\text{BHHR TIS Pass/Fail limit}_{low}\text{ (dBm)} = \text{FS TIS Pass/Fail limit (dBm)} + (\text{EUT BHHR TIS}_{low}\text{ (dBm)} - \text{EUT FS TIS}_{low}\text{ (dBm)})$$

For example, if the FS TIS limit is -100 dBm, the EUT BHHR TIS_{low} on the low-frequency reference channel is -99 dBm, and the EUT FS TIS_{low} on the low-frequency reference channel is -104 dBm, we have:

(-100 (dBm) + (-99 (dBm) - (-104 (dBm)))) dBm = -95 dBm

In this example, -95 dBm would be the BHHR TIS Pass/Fail $Limit_{low}$ used when repeating Steps 1 through 6 above with the EUT in the BHHR position for all intermediate channels associated with the low-frequency reference channel as shown in Figure 6-1.

Similar evaluations are performed for mid and high reference channels. Note that BHHR TIS Pass/Fail $limit_{low}$, BHHR TIS Pass/Fail $limit_{mid}$ and BHHR TIS Pass/Fail $limit_{high}$ can be different.

9. Note the downlink power level which corresponds to the EUT's peak BHHR radiated sensitivity as described in Step 7 above, which will be referred to as BHHR $EIS_{(peak\ low)}$. Since the BHHR TIS Pass/Fail limit $_{low}$ is directly derived from the FS limit and the TIS difference, see Equation 6.23, the same margin $M1_{low}$ is to be used. Adjust the digital call simulator to the RF power level calculated by the following formula:

EQUATION 6.24

$$\text{Downlink Signal Power}_{low}\ (\text{dBm}) = \text{BHHR EIS}_{(peak\ low)}\ (\text{dBm}) + M1_{low}\ (\text{dB}) + 3\ (\text{dB})$$

For example, if the EUT's BHHR EIS(peak low) was -100 dBm on the low-frequency reference channel, the EUT's low-frequency reference channel BHHR TIS low was -96 dBm, and the BHHR TIS low limit is -92 dBm, we have:

(-100 (dBm) + 4 (dB) + 3 (dB)) dBm = -93 dBm

In this example, the signal generator would be set to -93 dBm for all intermediate channels associated with the low-frequency reference channel as shown in Figure 6-1.

Similar evaluations are performed for mid and high reference channels.

10. Without changing the RF signal level, change the frequency of the base station simulator such that it is operating on a defined intermediate channel.
11. Using the base station simulator, measure the FER using the required number of frames as described above. The measured FER must not exceed 0.5%.
12. Repeat steps 10 through 11 of this procedure for all remaining intermediate channels. If the reference channel changes from low to mid or high, move to the location and polarization of the next reference channel (mid, high), see step 7, and take the EUT's measured FS TIS and BHHR TIS on the low, mid and high-frequency reference channels into account when calculating the downlink signal power level according to Equation 6.24 in step 9.
13. Report the BHHR pass/fail status of each intermediate channel listed in Appendix K.1. For both the full TIS test and the intermediate channel tests, head/hand testing shall be conducted based on device type, as specified in Appendix O. Refer to Appendix C for head/hand testing requirements. Perform each test on all specified frequencies with the EUT antenna extended and retracted, as applicable.
14. The methodology in Step 8 shall be applied to determine the TIS Pass/Fail Limits for all non-primary mechanical modes and secondary antennas, if applicable, for the purpose of performing the intermediate channel desense test.

For the full TIS test, head/hand and/or free-space testing shall be conducted based on device type, as specified in Appendix O. For the intermediate channel tests, head and hand phantom and free-space test configurations shall be conducted based on device type, as specified in Appendix O. Refer to Appendix C for head/hand testing requirements. Perform each test on all specified frequencies with the EUT antenna extended and retracted, as applicable.

Note: *Head-adjacent testing is only required for CDMA 1xRTT data if the EUT supports usage against the head in this mode (e.g., VoIP).*

Intermediate channel tests are not required if intermediate channel tests are passed in CDMA for the same frequency bands.

6.10.2 Criteria

Results shall be reported as specified in Appendix B using the figures of merit given in Appendix B.2. Reports shall include results for free-space and head/hand configurations (if applicable) across all channels measured with the EUT antenna extended and retracted.

Relative sensitivity on intermediate channels test results shall be provided in a file format equivalent to that specified in Appendix B.

TABLE 6-10 CDMA 1XRTT DATA 800 MAXIMUM TIS LEVEL (IN DBM) REQUIREMENTS FOR THE PRIMARY MECHANICAL MODE[1]

Band	Device Held Up to Head for Voice (Yes/No)	Antenna Type	FS	BHHL and BHHR	HL and HR
CDMA 1xRTT DATA 800	Yes[2]	Embedded	-101	TBD	TBD
		Stub or Retractable	-101	TBD	TBD
	No[3]	All	-101	N/A	N/A
CDMA 1xRTT DATA 1900	Yes[2]	Embedded	-101	TBD	TBD
		Stub or Retractable	-101	TBD	TBD
	No[3]	All	-101	N/A	N/A
CDMA 1xRTT DATA 2100/1700	Yes[2]	Embedded	-101	TBD	TBD
		Stub or Retractable	-101	TBD	TBD
	No[3]	All	-101	N/A	N/A

Note 1: Primary Mechanical Mode refers to device configured in preferred mode per manufacturer instructions (typically means antenna extended, fold or portrait slide open, but depends on form factor).

Note 2: "Yes" applies if the device supports voice operation in the talking position against the head in any cellular radio mode.

Note 3: "No" would be applicable to data-centric devices that are not held up against the head, e.g., embedded laptop solutions.

6.11 CDMA with Receive Diversity

For all frequency bands in which the CDMA EUT does NOT support Receive Diversity, CDMA testing shall be performed as per Section 6.2, Section 6.9 and Section 6.10.

For all frequency bands in which the CDMA EUT supports Receive Diversity, CDMA testing shall be performed using the procedure defined in Section 6.11.1 below.

6.11.1 Test Procedure

For all frequency bands in which the CDMA EUT supports Receive Diversity, the CDMA radiated receiver performance shall be tested using the procedure described below. Receiver "a" is the receiver connected to antenna "a" and receiver "b" is the receiver connected to antenna "b" as defined in Section 6.11.2.

1. Receiver "a" testing:
   a. Perform the CDMA test in Section 6.2 using the procedure described in Section 6.2.1 (including the intermediate channel test) with the following exception: Enable receiver "a" and disable receiver "b".
   b. Perform the CDMA 1xEV-DO Data test in Section 6.9 using the procedure described in Section 6.9.1 (including the intermediate channel test) with the following exception: Enable receiver "a" and disable receiver "b".
   c. Perform the CDMA 1xRTT Data test in Section 6.10 using the procedure described in Section 6.10.1 (including the intermediate channel test) with the following exception: Enable receiver "a" and disable receiver "b".
2. Receiver "b" testing:
   a. Perform the CDMA test in Section 6.2 using the procedure described in Section 6.2.1 (including the intermediate channel test) with the following exception: Disable receiver "a" and enable receiver "b".
   b. Perform the CDMA 1xEV-DO Data test in Section 6.9 using the procedure described in Section 6.9.1 (including the intermediate channel test) with the following exception: Disable receiver "a" and enable receiver "b".
   c. Perform the CDMA 1xRTT Data test in Section 6.10 using the procedure described in Section Section 6.10.1 (including the intermediate channel test) with the following exception: Disable receiver "a" and enable receiver "b".

Note: *As an alternative to the procedures described in steps 1 and 2 above, TIS for EUTs supporting two-branch diversity may be evaluated by employing RSS-based measurements. The methodology for these measurements is described in Section 6.17 of this document. When an RSS-based measurement methodology is employed, both receivers may remain active simultaneously for the pattern measurement, provided that the RSS measurement software*

provides independent data streams from each receiver. To reduce the measurement uncertainty, it is recommended that the RSS measurement be made on both receivers at each particular angle and polarization without re-positioning. The details of RSS data collection and analysis are described in Section 6.17.

6.11.2 Criteria

Results for both the primary and secondary antennas shall be reported as specified in Appendix B using the figures of merit given in Appendix B.2. Reports shall include the results or free-space and simulated-use configurations (if applicable) across all channels measured with the EUT antenna extended or retracted.

The better antenna between the two receiving antennas is always identified as the primary antenna, and the weaker antenna is the secondary antenna. The manufacturer shall identify one antenna as “a” and the other antenna as “b”. When either the “a” or “b” antennas is activated dynamically, then the manufacturer must identify this antenna as being active dynamically and include this information in the test report. Antenna “a” or “b” shall be identified as the primary antenna for all test cases having a primary and secondary antenna.

The antenna used for transmitting shall be identified as “a”, “b” or “other”.

The branch power difference [BPD] (dB) is defined as the TIS of the secondary antenna (dBm) minus the TIS of the primary antenna (dBm).

Relative sensitivity on intermediate channels test results shall be provided for both the primary and secondary antennas in a file format equivalent to that specified in Appendix B.

The primary antenna TIS results shall meet the criteria detailed in:

- Table 6-1 for CDMA TIS
- Table 6-9 for CDMA 1xEV-DO Data TIS
- Table 6-10 for CDMA 1xRTT Data TIS

The branch power difference for each CDMA, CDMA 1xEV-DO DATA and CDMA 1xRTT DATA band shall not exceed the values in Table 6-11.

TABLE 6-11 CDMA, CDMA 1XEV-DO DATA, CDMA 1XRTT DATA BRANCH POWER DIFFERENCE (DB) CRITERIA TABLE FOR THE PRIMARY MECHANICAL MODE[1]

Band / Protocol	Device Held Up to Head for Voice (Yes/No)	FS	BHHL and BHHR	HL and HR
CDMA 800 CDMA1xEV-DO DATA 800 CDMA 1xRTT DATA 800	Yes[2]	TBD	TBD	TBD
	No[3]	TBD	N/A	N/A
CDMA 1900 CDMA1xEV-DO DATA 1900 CDMA 1xRTT DATA 1900	Yes[2]	TBD	TBD	TBD
	No[3]	TBD	N/A	N/A
CDMA 2100/1700 CDMA1xEV-DO DATA 2100/1700 CDMA 1xRTT DATA 2100/1700	Yes[2]	TBD	TBD	TBD
	No[3]	TBD	N/A	N/A

Note 1: Primary Mechanical Mode refers to device configured in preferred mode per manufacturer instructions (typically means antenna extended, fold or portrait slide open, but depends on form factor).

Note 2: "Yes" applies if the device supports voice operation in the talking position against the head in any cellular radio mode.

Note 3: "No" would be applicable to data-centric devices that are not held up against the head, e.g., embedded laptop solutions.

6.12 UMTS Two-Branch Receive Diversity

Note: *In all frequency bands for which the UMTS EUT does NOT support two-branch receive diversity, TIS measurement shall be performed as per Section 6.7.*

6.12.1 Test Procedure

In all frequency bands for which the UMTS EUT supports two-branch receive diversity, UMTS radiated receiver performance shall be tested using the procedure described below. Receiver "a" is the receiver connected to antenna "a" and receiver "b" is the receiver connected to antenna "b" as defined in Section 6.12.2.

1. Receiver "a" testing

a. Perform the UMTS TIS measurement test described in Section 6.7 using the procedure described in Section 6.7.1 with the following modification: Enable receiver “a” and disable receiver “b”.

2. Receiver “b” testing

a. Perform the UMTS test in Section 6.7 using the procedure described in Section 6.7.1 with the following modification: Disable receiver “a” and enable receiver “b”.

Note: *As an alternative to the procedures described in sub-section Section 6.12.1 above, TIS for EUTs supporting two-branch receive diversity may be evaluated by employing RSS-based measurements. The methodology for these measurements is described in Section 6.17 of this document. When an RSS-based measurement methodology is employed, both receivers may remain active simultaneously for the pattern measurement, provided that the RSS measurement software is capable of providing fully independent data streams from each receiver. To reduce measurement uncertainty, it is recommended that the RSS measurement be made on both receivers at each measurement antenna angle and polarization without re-positioning. The details of RSS data collection and analysis are described in Section 6.17.*

6.12.2 Criteria

TIS results for both the primary and secondary antennas shall be reported as specified in Appendix B using the figures of merit given in Appendix B.2. Reports shall include the results for free-space and simulated-use configurations (if applicable) across all channels.

The better antenna between the two receiving antennas is always identified as the primary antenna, and the weaker antenna is the secondary antenna. The manufacturer shall identify one antenna as “a” and the other antenna as “b”. When either the “a” or “b” antennas is activated dynamically, then the manufacturer must identify this antenna as being active dynamically and include this information in the test report. Antenna “a” or “b” shall be identified as the primary antenna for all test cases having a primary and secondary antenna.

The antenna used for transmitting shall be identified as “a”, “b” or “other”.

The branch power difference [BPD] (dB) is defined as the TIS of the secondary antenna (dBm) minus the TIS of the primary antenna (dBm).

Test results pertaining to relative sensitivity on intermediate channels shall be provided for both the primary and secondary antennas in a file format equivalent to that specified in Appendix B.

The primary antenna TIS results shall meet the criteria detailed in Table 6-5 for UMTS TIS.

The branch power difference for each UMTS band shall not exceed the values in Table 6-12.

TABLE 6-12 UMTS BRANCH POWER DIFFERENCE (DB) CRITERIA TABLE FOR THE PRIMARY MECHANICAL MODE[1]

Band / Protocol	Device Held Up to Head for Voice (Yes/No)	FS	BHHL and BHHR	HL and HR
UMTS 800	Yes[2]	TBD	TBD	TBD
	No[3]	TBD	N/A	N/A
UMTS 1900	Yes[2]	TBD	TBD	TBD
	No[3]	TBD	N/A	N/A
UMTS 2100/1700	Yes[2]	TBD	TBD	TBD
	No[3]	TBD	N/A	N/A

Note 1: Primary Mechanical Mode refers to device configured in preferred mode per manufacturer instructions (typically means antenna extended, fold or portrait slide open, but depends on form factor).

Note 2: "Yes" applies if the device supports voice operation in the talking position against the head in any cellular radio mode.

Note 3: "No" would be applicable to data-centric devices that are not held up against the head, e.g., embedded laptop solutions.

6.13 GPS

This section details the methodology to be used for determining GPS TIS, Upper Hemisphere Isotropic Sensitivity (UHIS), and Partial Isotropic GPS Sensitivity (PIGS). The GPS TIS, UHIS, and PIGS measurements will be performed using the alternate TIS receive signal strength measurement methodology defined in Section 6.17. GPS Over-the-Air performance shall be tested in all frequency bands and cellular radio modes where the EUT supports A-GPS and as defined herein (for example, GPS Over-the-Air performance would not have to be tested for 1xEV-DO since it is only defined for CDMA).

When testing A-GPS with different cellular radio modes used for assistance, the Alternate Test Procedure for TIS Single Point Offset Test in Section 6.15.1 may be used except that the position/polarization that is used shall be the same position/polarization determined for the GPS sensitivity search. The Alternate Test Procedure for TIS Single Point Offset Test cannot be used with dynamically tuned GPS antennas when the tuning of the GPS antenna changes between the reference cellular protocol and with the protocol being evaluated.

6.13.1 GPS for CDMA Devices

The procedure identified herein has been based on industry standards used during EUT conformance testing. However, some modifications were made to reduce test time, to reduce the Over-the-Air test solution complexity, and to account for specific Over-the-Air testing needs. It is assumed that the EUT will be tested per the conformance testing requirements defined by the industry standards. Therefore, any device that does not specifically meet the requirements of the industry standards would be identified during the conformance testing.

6.13.1.1 Test Procedure

GPS Receiver Sensitivity measurements shall be performed using test equipment that supports TIA-916 GPS Accuracy and GPS Sensitivity testing. The EUT's GPS receiver sensitivity will be the minimum GPS signal level that results in a passing result for the TIA-916 GPS Sensitivity test. In order to minimize test time, the EUT measurements may be performed on a single call as long as each EUT measurement report is the result of a separate request from the PDE (Position Determination Entity). In other words, the EUT would not be required to be power cycled and would not be required to have the GPS information specifically cleared as per TIA-916 since the position capability utilized by the EUT during the test is MS-Assisted (Mobile Station Assisted). Refer to Appendix A for set-up illustrations.

The conducted GPS sensitivity of the EUT shall also be measured at the antenna connector, if available. It is preferable that the EUT be the same as utilized for the TIS measurements. However, if the EUT does not readily support an antenna port for conducted measurements, a separate modified EUT may be provided for all conducted measurements. If no connector is available, the conducted sensitivity measurement is not required. Ideally, the sensitivity measurement will be performed with the same instrumentation in an equivalent configuration in order to minimize the measurement uncertainty involved. A different sensitivity measurement device may be used as long as any differences in absolute measurement accuracy are accounted for, either in corrections to the recorded sensitivity level or increased reported measurement uncertainty for the conducted measurement. Refer to Appendix A.3 for more information on conducted sensitivity measurements and cabling setups.

The test will determine the Total Isotropic Sensitivity (TIS), the Upper Hemisphere Isotropic Sensitivity (UHIS) (Theta = 0 to 90 degrees), and the Partial Isotropic GPS Sensitivity (PIGS) (Theta = 0 to 120 degrees) of the GPS receiver based on the alternate TIS test procedure based on receive signal strength specified in Section 6.17 for each test configuration.

The pattern data shall be determined by averaging Carrier-to-Noise (C/N_0) measurements at each point on the sphere. The C/N_0 measurements will be obtained from the TIA-916 GPS accuracy test. For one measurement report, the reported satellite C/N_0 values shall be averaged. If it is necessary to obtain more measurements to reduce uncertainty, repeat the measurement requests at the same position and polarization and independently average the reported satellite C/N_0 values for each measurement report. After a sufficient number of

measurement requests have been made, average the average results that were obtained for each measurement request. Sufficient averaging shall be completed to ensure that the uncertainty is less than the value included in the uncertainty budget. The C/N_0 pattern measurements shall be performed with Radio Configuration 1, 2, or 3, Service Option 1, 2, 3, 17, or 55, and Closed Loop Power Control enabled to conserve battery power. Care should be taken to keep the transmit power 10 dB or more below the maximum output power of the EUT. The C/N_0 pattern data shall be linearized per the linearization method specified in Section 6.17.2**.**

The GPS sensitivity search shall be performed at the position/polarization where the peak C/N_0 value was obtained in the upper hemisphere. The TIA-916 sensitivity test shall be used with the exception that the C/N_0 Sigma 1 and Sigma 2 errors are ignored. The maximum GPS sensitivity search step size shall be 0.5 dB. The GPS sensitivity search shall be performed with Radio Configuration 1 or 2, Service Option 3, and Closed Loop Power Control set to All Up bits.

The CDMA test channel for Cellular Band shall be channel 384. The CDMA test channel for PCS Band shall be channel 600. The CDMA test channel for AWS-1 Band shall be channel 450. All radiated tests for a particular band/antenna configuration should be performed without disturbing the setup to minimize uncertainty in the peak C/N_0 measurement and the sensitivity search. If the EUT will be disturbed during the test, a corresponding uncertainty component shall be included in the uncertainty budget.

TIS, UHIS, and PIGS shall be fully measured as described above and calculated pursuant to Appendices B.2.3, B.2.5 and B.2.6 when operating the device at the channels specified in this section for all frequency bands supported by the EUT and required to be tested per this test plan. In all cases, the linearized C/N_0 values shall be used in the calculations.

Note that when the Alternate Test Procedure for TIS Single Point Offset Test can be and is used for GPS testing with CDMA, then 3D C/N_0 patterns do not need to be measured and the linearization step does not need to be applied for applicable CDMA bands.

In addition to performing the sensitivity scan at the mid channel, the difference in sensitivity of the GPS receiver will be evaluated with the cellular transceiver active for all intermediate cellular channels. This difference in sensitivity will be determined by measuring the difference in radiated C/N_0 with the CDMA transmitter active at maximum power with the mid channel, and with each of the intermediate channels. This test will be called the GPS intermediate channel degradation test.

For this test, the radiated C/N_0 shall be measured at the position/polarization where the peak C/N_0 value was obtained in the upper hemisphere.

The C/N_0 measurements for each band/antenna configuration should be performed without disturbing the setup to minimize uncertainty in GPS intermediate channel degradation test. If the EUT will be disturbed during the test, a corresponding uncertainty component shall be included in the uncertainty budget.

The C/N_0 measurements will be obtained from the TIA-916 GPS accuracy test. Sufficient averaging of the C/N_0 measurements shall be completed to ensure that the uncertainty is less than the value specified in the lab's uncertainty budget. The averaging shall be performed in the same fashion as the averaging method used during the GPS pattern measurement. The C/N_0 measurements shall be performed using a Radio Configuration and Service Option as specified in the C/N_0 pattern measurement. The Closed Loop Power Control shall be set to All Up Bits.

The basic test sequence for performing this GPS intermediate channel degradation test is as follows:

1. Set the CDMA channel to the mid-channel for the given band (channel 384 for cellular band, channel 600 for PCS band, channel 450 for AWS-1 band)
2. Measure the average C/N_0 at the mid-channel and linearize the result using the data from the earlier linearization process.
3. Change the CDMA channel to an intermediate channel listed in Appendix K.1 for the appropriate CDMA band.
4. Measure the average C/N_0 at the intermediate channel and linearize the result using the data from the earlier linearization process.
5. Repeat steps 3 and 4 for all the intermediate channels in Appendix K.1 for the appropriate CDMA band.
6. Repeat steps 1 through 5 for each CDMA band.

The GPS intermediate channel degradation is the difference between the linearized C/N_0 with the transmitter at the mid-channel and the lowest linearized C/N_0 with the transmitter at any intermediate channel (including the mid-channel). Therefore, the GPS intermediate channel degradation will always be zero or greater. Report the GPS intermediate channel degradation.

GPS_{ICD} = GPS degradation due to intermediate channel jamming

$CNR_{midchannel}$ = Linearized C/N_0 with the mid-channel

$CNR_{mid\ IC}$ = minimum linearized C/N_0 across all intermediate channels

$$GPS_{ICD} = CNR_{midchannel} - CNR_{mid\ IC} \text{ (in dB)}$$

For both the full TIS test and the GPS intermediate channel degradation test, head with hand phantom and/or hand phantom testing shall be conducted based on device type, as specified in Appendix O. Refer to Appendix C for head and hand testing requirements. Perform each test on all specified frequencies, in all device configurations suitable for use, and with the EUT antenna extended and retracted, as applicable.

6.13.1.2 Criteria

Results shall be reported as specified in Appendix B using the figures of merit given in Appendix B.2. Reports shall include results for all simulated-use configurations across all channels measured with the EUT antenna extended and retracted.

GPS intermediate channel degradation test results shall be provided in a file format equivalent to that specified in Appendix B.

TABLE 6-13 A-GPS WITH CDMA MAXIMUM TIS/UHIS/PIGS LEVEL (IN DBM) REQUIREMENTS FOR THE PRIMARY MECHANICAL MODE[1]

Cellular Band	BHHL and BHHR			HL and HR		
	TIS	UHIS	PIGS	TIS	UHIS	PIGS
CDMA 800	TBD	TBD	TBD	TBD	TBD	TBD
CDMA 1900	TBD	TBD	TBD	TBD	TBD	TBD
CDMA 2100/1700	TBD	TBD	TBD	TBD	TBD	TBD

Note 1: Primary Mechanical Mode refers to device configured in preferred mode per manufacturer instructions (typically means antenna extended, fold or portrait slide open, but depends on form factor).

6.13.2 GPS for GSM/UMTS Devices

The procedure identified herein has been based on industry standards used during UE conformance testing. However, some modifications were made to reduce test time and the Over-the-Air test solution complexity, specifically by removing the need to vary the GPS scenario and the random locations and alternating locations requirement of 3GPP TS 34.171 and 3GPP TS 51.010-1, allowing Acquisition Assistance Data and Reference Time Data to be provided to the EUT as part of the initial Measure Position Request Message, and allowing for a Voice Call or a Supplemental Service Call for the wireless connection. The supplemental service call shall be in accordance with the defined 3GPP standards and shall support a circuit switched connection for normal device operation (3GPP test mode and/or data loopback calls are not allowed). It is assumed that the UE will be tested per the UE conformance testing requirements defined by the industry standards. Therefore, any device that was not properly clearing previous location information or was not capable of meeting the performance requirements would be identified during the conformance testing.

6.13.2.1 Test Procedure

GPS Receiver Sensitivity measurements shall be performed using test equipment that supports the relevant portions of 3GPP TS 34.171 Assisted Global Positioning System (A-GPS) and 3GPP TS 51.010-1 that are referenced in this section. In all cases, the latest versions of the referenced 3GPP documents shall be used. The EUT's GPS receiver sensitivity will be the minimum GPS signal level that results in a passing result based on A-GPS test parameters in Table 6-15, which are based on the 3GPP TS 34.171 test scenario 5.2.1.5 for UMTS and 3GPP TS 51.010-1 test scenario 70.11.5.1 for GSM.

The test will determine the Total Isotropic Sensitivity (TIS), the Upper Hemisphere Isotropic Sensitivity (UHIS) (Theta = 0 to 90 degrees) and the Partial Isotropic GPS Sensitivity (PIGS) (Theta = 0 to 120 degrees) of the GPS receiver. The TIS test procedure based on receive signal strength specified in Section 6.17 will be used.

The test applies to both UE (User Equipment) based and UE assisted A-GPS devices. If both UE based and UE assisted A-GPS is supported by a device, then both modes will be tested.

This test will consist of the following measurements:

a. Radiated 3D C/N_0 pattern measurement
b. Radiated GPS sensitivity measurement
c. Radiated GPS intermediate channel degradation measurement

TIS, UHIS, and PIGS shall be fully measured as described in Section 6.13.2.1.1 and Section 6.13.2.1.2 and calculated pursuant to Appendices B.2.3, B.2.5 and B.2.6. when operating the device at the channels specified in this section for all frequency bands supported by the EUT and required to be tested per this test plan. In all cases, the linearized C/N_0 values shall be used in the calculations.

For both the full TIS test and the GPS intermediate channel degradation test, head with hand phantom and/or hand phantom testing shall be conducted based on device type, as specified in Appendix O. Refer to Appendix C for head and hand testing requirements. Perform each test in all functional use configurations, and with the EUT antenna extended and retracted, as applicable.

6.13.2.1.1 Radiated 3D C/N_0 Pattern Measurement

Devices supporting UE assisted A-GPS can perform this section, however devices supporting UE based A-GPS may not be able to perform this section. If a device supports both methods, then the radiated 3D C/N_0 pattern measurement may just be done using UE assisted A-GPS. The 3D C/N_0 pattern will then be used for determining the radiated GPS performance for both UE assisted and UE based A-GPS. If a device only supports UE based A-GPS then the C/N_0

data shall be stored in the EUT's internal memory in the format specified in Section 6.17.4.1. Another alternative for a device, which only supports UE based A-GPS, is to enable UE assisted A-GPS or some other test mode, just to perform the radiated 3D C/N_0 pattern measurement. If used, the test mode shall allow for the following exceptions in the device firmware for UE based tests:

- Measurement Report Message (RRC): As referenced in TS 25.331 v8.2 Section 10.3.7.99, both "UE Positioning position estimate info" and "UE positioning GPS measured results" IEs shall be included.
- Measure Position Response Message (RRLP): As referenced in TS 44.031 Section 4.2, both "locationInfo" and "gps-MeasureInfo" IEs shall be included.

The GPS satellite simulator shall implement GPS Scenario #1 as defined in 3GPP TS 34.108 Section 10.1.2.1. The scenario shall be reset before the initial satellites become not visible. The scenario shall be executed as required in Section 5.3 of 3GPP TS 34.171 and Section 70.11.6 of 3GPP TS 51.010-1 except that random errors shall not be applied to the UE locations and the alternating locations requirement shall not be implemented. Early delivery of Acquisition Assistance Data and Reference Time Data may be provided to the EUT and a Voice Call or Supplemental Service Call may be used for the wireless connection per Section 6.13.2. The supplemental service call shall be in accordance with the defined 3GPP standards and shall support a circuit switched connection for normal device operation (3GPP test mode and/or data loopback calls are not allowed).

The pattern data shall be determined by averaging Carrier-to-Noise (C/N_0) measurement of all visible GPS satellites for each measurement at each point on the sphere. The GPS satellite simulator shall provide 8 satellites at the same power. All C/N_0 measurements shall be done with the GPS engine in a tracking mode or by using individual UE-assisted measurements. Orthogonal linear polarizations will be measured. Sufficient averaging over time of the average C/N_0 measurements shall be completed to ensure that the uncertainty is less than the value specified in the lab's uncertainty budget. The C/N_0 pattern measurements shall be performed with any supported GSM/UMTS link using a low TX power to conserve battery power, while guaranteeing that the TX power is 10 dB or more below the maximum TX power.

TABLE 6-14 CHANNEL SETTINGS FOR GSM/UMTS FOR C/N_0 MEASUREMENTS

Protocol/Band	Test Channel
GSM 850	190
GSM 1900	661
UMTS 850	TX: 4183, RX: 4408
UMTS 1900	TX: 9400, RX: 9800
UMTS 2100/1700	TX: 1413, RX: 1638

The C/N_0 pattern data shall be linearized per the linearization method specified in Section 6.17.2.

Note that when the Alternate Test Procedure for TIS Single Point Offset Test can be and is used for GPS testing with GSM or WCDMA, then 3D C/N_0 patterns do not need to be measured and the linearization step does not need to be applied for applicable GSM and WCDMA bands.

6.13.2.1.2 Radiated GPS Sensitivity Measurement

The GPS sensitivity search shall be performed at the position/polarization where the peak C/N_0 value was obtained in the upper hemisphere.

The radiated sensitivity tests for a particular band/antenna configuration should be performed without disturbing the setup to minimize uncertainty in the sensitivity search. If the EUT will be disturbed during the test, a corresponding uncertainty component shall be included in the uncertainty budget.

The following test parameters will be used to determine the GPS sensitivity. These parameters basically follow 3GPP TS 34.171 Test Scenario 5.2.1.5 for UMTS and 3GPP TS 51.010-1 Test Scenario 70.11.5.1 for GSM, except for modifications herein. This test scenario basically determines the GPS sensitivity in acquisition mode with assistance using the control plane. GPS assistance using control plane will be used for all GPS TIS testing.

TABLE 6-15 A-GPS TEST PARAMETERS FOR GSM/UMTS

Test Parameter Description	Test Parameter Settings
Number of satellites	8
HDOP range	1.1 to 1.6
Propagation conditions	AWGN
GPS time assistance	Coarse, ± 1.8 seconds
Phone response time	20 s for UMTS 16 s for GSM
Acceptable response time to network	20.3 seconds for UMTS/GSM
Success rate	95 successful fixes with the necessary accuracy out of 100 attempts (95%)
Position accuracy	101.3 m
Maximum sensitivity step size	0.5 dB

Note that the satellite power levels for the sensitivity test are such that there will be one satellite, which transmits 5 dB higher than the other satellites. The reported sensitivity level will be based on the power of the weaker satellites. The 1 dB test tolerance or test parameter relaxation for the absolute GPS signal level in Table F.4.1 of 3GPP TS 34.171 or Table 5.5.4.1 of 3GPP TS 51.010-1 shall not be used in reporting the sensitivity measurement results. The above clarification means that passing the requirements of 3GPP TS 34.171 or 3GPP TS 51.010-1, as modified in Table 6-15 above, at signal levels -141 dBm and -146 dBm will lead to a sensitivity level report of -146 dBm, rather than -147 dBm. The GPS engine shall be cold started for every location attempt.

The GPS satellite simulator shall implement GPS Scenario #1 as defined in 3GPP TS 34.108 Section 10.1.2.1. The scenario shall be reset before the viable running time expires as defined in the same clause. The scenario shall be executed as required in Section 5.2.1 of 3GPP TS 34.171 and Section 70.11.5.1 of 3GPP TS 51.010-1 except that random errors shall not be applied to the UE locations and the alternating locations requirement shall not be implemented. Early delivery of Acquisition Assistance Data and Reference Time Data may be provided to the EUT and a Voice Call or Supplemental Service Call may be used for the wireless connection per Section 6.13.2. The supplemental service call shall be in accordance with the defined 3GPP standards and shall support a circuit switched connection for normal device operation (3GPP test mode and/or data loopback calls are not allowed).

GPS sensitivity tests will be performed for the following GSM and UMTS bands for the center channel only: GSM 850, GSM 1900, UMTS 850, UMTS 1900 and UMTS 2100/1700. The TX power will be set to the maximum power as listed in Table 6-16.

TABLE 6-16 TX POWER SETTINGS AND TEST CHANNELS OF GSM/UMTS FOR A-GPS

Protocol/Band	Power setting	Test Channel
GSM 850	Select PCL from Table 5-6	190
GSM 1900	Select PCL from Table 5-7	661
UMTS 850	All “up power” commands	TX: 4183, RX: 4408
UMTS 1900	All “up power” commands	TX: 9400, RX: 9800
UMTS 2100/1700	All “up power” commands	TX: 1413, RX: 1638

The conducted GPS sensitivity of the EUT shall also be measured at the antenna connector, if available. It is preferable that the EUT be the same as utilized for the TIS measurements. However, if the EUT does not readily support an antenna port for conducted measurements, a separate modified EUT may be provided for all conducted measurements. If no connector is available, the conducted sensitivity measurement is not required. Ideally, the sensitivity

measurement will be performed with the same instrumentation in an equivalent configuration in order to minimize the measurement uncertainty involved. A different sensitivity measurement device may be used as long as any differences in absolute measurement accuracy are accounted for, either in corrections to the recorded sensitivity level or increased reported measurement uncertainty for the conducted measurement. Refer to Appendix A.3 for more information on conducted sensitivity measurements and cabling setups.

6.13.2.1.3 Radiated GPS Intermediate Channel Degradation Measurement

Devices supporting UE assisted A-GPS can perform this section, however devices supporting UE based A-GPS may not be able to perform this section. If a device supports both methods, then the radiated GPS intermediate channel degradation measurement may just be done using UE assisted A-GPS. The radiated GPS intermediate channel degradation will apply to both UE assisted and UE based A-GPS. If a device only supports UE based A-GPS then the C/N_0 data shall be stored in the EUT's internal memory in the format specified in Section 6.17.4.1. Another alternative for a device, which only supports UE based A-GPS, is to enable UE assisted A-GPS or some other test mode, just to perform the radiated GPS intermediate channel degradation measurement. If used, the test mode shall allow for the following exceptions in the device firmware for UE based tests:

- Measurement Report Message (RRC): As referenced in TS 25.331 v8.2 Section 10.3.7.99, both “UE Positioning position estimate info” and “UE positioning GPS measured results” IEs shall be included.
- Measure Position Response Message (RRLP): As referenced in TS 44.031 v7.8, both “locationInfo” and “gps-MeasureInfo” IEs shall be included.

In addition to performing the sensitivity scan at the mid channel, the difference in sensitivity of the GPS receiver will be evaluated with the cellular transceiver active for all intermediate cellular channels. This difference in sensitivity will be determined by measuring the difference in radiated C/N_0 with the GSM/UMTS transmitter active at maximum power with the mid channel, and with each of the intermediate channels. This test will be called the GPS intermediate channel degradation test.

For this test, the radiated C/N_0 shall be measured at the position/polarization where the peak C/N_0 was obtained in the upper hemisphere.

The C/N_0 measurements for each band/antenna configuration should be performed without disturbing the setup to minimize uncertainty in GPS intermediate channel degradation test. If the EUT will be disturbed during the test, a corresponding uncertainty component shall be included in the uncertainty budget.

The basic test sequence for performing this GPS intermediate channel degradation test is as follows:

1. Set up the satellite simulator with 8 satellites at the same power. The GPS satellite power and scenario shall be set according to the recommendations in Section 6.13.2.1.1.
2. Enable a call using the appropriate GSM/UMTS protocol.

3. Enable the GPS engine.
4. Obtain a GPS lock and start tracking.
5. Set the GSM/UMTS channel to the mid channel and TX power level to maximum power as listed in Table 6-16.
6. Transmit the C/N_0 of the visible GPS satellites over the existing GSM/UMTS link. Record the average C/N_0 of the visible GPS satellites. If additional C/N_0 measurements are required to minimize uncertainty, the measurements should be made prior to moving to the next step. Calculate the average C/N_0 (or average over repeated measurements of averages) and linearize the result using the data from the earlier linearization process.
7. Change the GSM/UMTS channel to a channel listed in Appendix K.2 or K.3 as applicable. It is up to the implementer to determine how to change channels.
8. Transmit the C/N_0 of the visible GPS satellites over the existing GSM/UMTS link. Record the average C/N_0 of the visible GPS satellites. If additional C/N_0 measurements are required to minimize uncertainty, the measurements should be made prior to moving to the next step. Calculate the average C/N_0 (or average over repeated measurements of averages) and linearize the result using the data from the earlier linearization process.
9. Repeat steps 7 and 8 for each channel in Appendix K.2 or K.3 as applicable for the appropriate GSM/UMTS bands.
10. Repeat steps 5 through 9 for each GSM/UMTS band.

Alternatively, the C/N_0 measurements defined above may be achieved by using the methodology defined for the radiated 3D C/N_0 pattern measurement defined in Section 6.13.2.1.1 except that TX power level will be set to maximum power as listed in Table 6-16. Early delivery of Acquisition Assistance Data and Reference Time Data may be provided to the EUT and a Voice Call or Supplemental Service Call may be used for the wireless connection per Section 6.13.2. The supplemental service call shall be in accordance with the defined 3GPP standards and shall support a circuit switched connection for normal device operation (3GPP test mode and/or data loopback calls are not allowed).

The GPS intermediate channel degradation is the difference between the linearized average C/N_0 (or average over repeated measurements of averages) with the transmitter at the mid channel and the lowest linearized average C/N_0 (or average over repeated measurements of averages) with the transmitter at any intermediate channel (including the mid-channel). Therefore, the GPS intermediate channel degradation will always be zero or greater. Report the GPS intermediate channel degradation.

As specified above, the average Carrier-to-Noise (C/N_0) measurement of all visible GPS satellites at each instance in time will be used. Sufficient averaging over time of C/N_0 measurements shall be completed to ensure that the uncertainty is less than the value specified in the lab's uncertainty budget.

GPS_{ICD} = GPS degradation due to intermediate channel jamming

$CNR_{midchannel}$ = Linearized C/N_0 with the mid-channel

$CNR_{mid\ IC}$ = minimum linearized C/N_0 across all intermediate cellular channels

$GPS_{ICD} = CNR_{midchannel} - CNR_{mid\ IC}$ (in dB)

6.13.2.2 Criteria

Results shall be reported as specified in Appendix B using the figures of merit given in Appendix B.2 Reports shall include results for all simulated-use configurations across all channels measured with the EUT antenna extended and retracted.

GPS intermediate channel degradation test results shall be provided in a file format equivalent to that specified in Appendix B.

TABLE 6-17 A-GPS WITH GSM/UMTS MAXIMUM TIS/UHIS/PIGS LEVEL (IN DBM) REQUIREMENTS FOR THE PRIMARY MECHANICAL MODE[1]

Cellular Band	Positioning Method	BHHL and BHHR			HL and HR		
		TIS	UHIS	PIGS	TIS	UHIS	PIGS
GSM 850	UE based	TBD	TBD	TBD	TBD	TBD	TBD
GSM 1900		TBD	TBD	TBD	TBD	TBD	TBD
UMTS 850		TBD	TBD	TBD	TBD	TBD	TBD
UMTS 1900		TBD	TBD	TBD	TBD	TBD	TBD
UMTS 2100/1700		TBD	TBD	TBD	TBD	TBD	TBD
GSM 850	UE Assisted	TBD	TBD	TBD	TBD	TBD	TBD
GSM 1900		TBD	TBD	TBD	TBD	TBD	TBD
UMTS 850		TBD	TBD	TBD	TBD	TBD	TBD
UMTS 1900		TBD	TBD	TBD	TBD	TBD	TBD
UMTS 2100/1700		TBD	TBD	TBD	TBD	TBD	TBD

Note 1: Primary Mechanical Mode refers to device configured in preferred mode per manufacturer instructions (typically means antenna extended, fold or portrait slide open, but depends on form factor).

6.13.3 GPS for LTE Devices

GPS testing for LTE Devices will use User Plane Positioning procedures. The use of User Plane positioning procedures is a deviation from GPS for WCDMA/GSM device testing which used Control Plane positioning procedures.

GPS for LTE devices will be tested using the Open Mobile Alliance (OMA) Secure User Plane (SUPL) 2.0 protocol defined in OMA-AD-SUPL-V2_0-20110527-C. RRLP or LPP can be used as the underlying positioning protocol for SUPL 2.0 over the LTE default bearer.

Devices supporting A-GPS with the ability to deliver the assistance data over RRLP and/or LPP as the underlying positioning protocol and establish the SUPL 2.0 over the LTE bearer shall be tested.

The procedure identified herein has been based on industry standards used during UE conformance testing. However, some modifications were made to reduce test time and the Over-the-Air test solution complexity, specifically by removing the need to vary the GNSS scenario and the random locations and alternating locations requirement of 3GPP TS 37.571, allowing Acquisition Assistance Data and Reference Time Data to be provided to the EUT as part of the initial RRLP Measure Position Request Message or LPP Provide Assistance Data. It is assumed that the UE will be tested per the UE conformance testing requirements defined by the industry standards. Therefore, any device that was not properly clearing previous location information or was not capable of meeting the performance requirements would be identified during the conformance testing.

6.13.3.1 Test Procedure

GPS Receiver Sensitivity measurements shall be performed using test equipment that supports the relevant portions of 3GPP TS 37.571 Assisted Global Navigation Satellite System (A-GNSS). In all cases, the latest versions of the referenced 3GPP documents shall be used. The EUT's GPS receiver sensitivity will be the minimum GPS signal level that results in a passing result based on A-GNSS test parameters in Table 6-19, which are based on the 3GPP TS 37.571-1 test scenario 7.1.1 Sub-Test Number 1.

The test will determine the Total Isotropic Sensitivity (TIS), the Upper Hemisphere Isotropic Sensitivity (UHIS) (Theta = 0 to 90 degrees) and the Partial Isotropic GPS Sensitivity (PIGS) (Theta = 0 to 120 degrees) of the GPS receiver. The TIS test procedure based on receive signal strength specified in Section 6.17 will be used.

The test applies to both UE (User Equipment) based and UE assisted A-GPS devices. If both UE based and UE assisted A-GPS is supported by a device, then both modes will be tested.

The test applies to LTE devices supporting either RRLP or LPP positioning protocol. The test requires that the device support SUPL 2.0 as the User plane protocol. If the device supports both RRLP and LPP positioning protocols, either one of these could be used during the test.

This test will consist of the following measurements:

- Radiated 3D C/N_0 pattern measurement
- Radiated GPS sensitivity measurement
- Radiated GPS intermediate channel degradation measurement

TIS, UHIS, and PIGS shall be fully measured as described in Section 6.13.3.1.1 and section Section 6.13.3.1.2 and calculated pursuant to Appendices B.2.3, B.2.5 and B.2.6 when operating the device at the channels specified in this section for all frequency bands supported by the EUT and required to be tested per this test plan. In all cases, the linearized C/N_0 values shall be used in the calculations.

For both the full TIS test and the GPS intermediate channel degradation test, head with hand phantom and/or hand phantom testing shall be conducted based on device type, as specified in Appendix O. Refer to Appendix C for head and hand testing requirements. Perform each test in all functional use configurations, and with the EUT antenna extended and retracted, as applicable.

Head-adjacent testing is only required for LTE if the EUT supports usage against the head in this mode (e.g., VoIP).

6.13.3.1.1 Radiated 3D C/N_0 Pattern Measurement

Devices supporting UE assisted A-GPS can perform this section, however devices supporting UE based A-GPS may not be able to perform this section. If a device supports both methods, then the radiated 3D C/N_0 pattern measurement may just be done using UE assisted A-GPS. The 3D C/N_0 pattern will then be used for determining the radiated GPS performance for both UE assisted and UE based A-GPS. If a device only supports UE based A-GPS then the C/N_0 data shall be stored in the EUT's internal memory in the format specified in Section 6.17.4.1. Another alternative for a device, which only supports UE based A-GPS, is to enable UE assisted A-GPS or some other test mode, just to perform the radiated 3D C/N_0 pattern measurement. If used, the test mode shall allow for the following exceptions in the device firmware for UE based tests:

- Measure Position Response Message (RRLP): As referenced in TS 44.031 Section 4.2, both “locationInfo” and “gps-MeasureInfo” IEs shall be included.
- Provide Location Information (LPP): In the *A-GNSS-ProvideLocationInformation* IE of the LPP Provide Location Information message as referenced in TS 36.355 Section 6.5.2.5, both “gnss-SignalMeasurementInformation” and “gnss-LocationInformation” shall be included.

The GPS satellite simulator shall implement GNSS Scenario #1 as defined in 3GPP TS 37.571-5 Section 6.2.1.2.1 for satellites simulated for 3GPP TS 37.571-1 subclause 7, sub-test 1. The scenario shall be reset before the initial satellites become not visible. The scenario shall be executed as required in Section 7.2 Sub-Test Number 1 of 3GPP TS 37.571-1 except that random errors shall not be applied to the UE locations and the alternating locations requirement shall not be implemented. Early delivery of Acquisition Assistance Data and Reference Time Data may be provided to the EUT and the default EPS bearer should be for the wireless connection to establish as SUPL 2.0 session.

The pattern data shall be determined by averaging Carrier-to-Noise (C/N_0) measurement of all visible GPS satellites for each measurement at each point on the sphere. The GPS satellite simulator shall provide 8 satellites at the same power. All C/N_0 measurements shall be done with the GPS engine in a tracking mode or by using individual UE-assisted measurements. Orthogonal linear polarizations will be measured. Sufficient averaging over time of the average C/N_0 measurements shall be completed to ensure that the uncertainty is less than the value specified in the lab's uncertainty budget. The C/N_0 pattern measurements shall be performed via SUPL 2.0 positioning sessions over the LTE data session using a low TX power to conserve battery power, while guaranteeing that the TX power is 10 dB or more below the maximum TX power.

The radiated 3D C/N_0 pattern measurement shall be performed with the channel settings specified in Table 6-18 for all applicable bands.

TABLE 6-18 CHANNEL SETTINGS FOR LTE FOR C/N_0 MEASUREMENTS

Band	Channel Bandwidth (MHz)	Channel	TX Designation	TX Frequency (MHz) [center of TX channel bandwidth][1]	UL RB Allocation	Channel	RX Designation	RX Frequency (MHz) [center of RX channel bandwidth][1]	DL RB Allocation
2[2]	10	18900	CH_5-TX	1880	50 RB with RBstart=0	900	CH_5-RX	1960	50 RB with RBstart=0
4	10	20175	CH_9-TX	1732.5	50 RB with RBstart=0	2175	CH_9-RX	2132.5	50 RB with RBstart=0
5[3]	10	20525	CH_2-TX	836.5	20 RB with RBstart=30	2525	CH_2-RX	881.5	50 RB with RBstart=0
12	10	23095	CH_{12}-TX	707.5	20 RB with RBstart=30	5095	CH_{13}-RX	737.5	50 RB with RBstart=0
13	10	23230	CH_{18}-TX	782	12 RB with RBstart=0	5230	CH_{18}-RX	751	50 RB with RBstart=0
14	10	23330	CH_{21}-TX	793	20 RB with RBstart=0	5330	CH_{21}-RX	763	50 RB with RBstart=0
17	10	23790	CH_{15}-TX	710	20 RB with RBstart=30	5790	CH_{15}-RX	740	50 RB with RBstart=0
25[2]	5	26365	CH_{24}-TX	1882.5	25 RB with RBstart=0	8365	CH_{24}-RX	1962.5	25 RB with RBstart=0
26[3]	5	26865	CH_{30}-TX	831.5	25 RB with RBstart=0	8865	CH_{30}-RX	876.5	25 RB with RBstart=0
41	20	40620	CH_{27}-TX-RX	2593	100 RB with RBstart=0	40620	CH_{27}-TX-RX	2593	100 RB with RBstart=0

Note 1: The frequencies listed in this table are the center of the channel bandwidth and not the center of the RB allocation.
Note 2: If the device supports Band 25 and Band 2, then testing is only required to be completed in Band 25.
Note 3: If the device supports Band 26 and Band 5, then testing is only required to be completed in Band 26.

The C/N_0 pattern data shall be linearized per the linearization method specified in Section 6.17.2.

6.13.3.1.2 Radiated GPS Sensitivity Measurement

The GPS sensitivity search shall be performed at the position/polarization where the peak C/N_0 value was obtained in the upper hemisphere.

The radiated sensitivity tests for a particular band/antenna configuration should be performed without disturbing the setup to minimize uncertainty in the sensitivity search. If the EUT will be disturbed during the test, a corresponding uncertainty component shall be included in the uncertainty budget.

The following test parameters will be used to determine the GPS sensitivity. These parameters basically follow 3GPP TS 37.571-1 Test Scenario 7.1.1 Sub-Test Number 1, except for modifications herein. This test scenario basically determines the GPS sensitivity in acquisition mode with assistance using the control plane. GPS assistance using User Plane will be used for all GPS TIS testing.

TABLE 6-19 A-GPS TEST PARAMETERS FOR LTE

Test Parameter Description	Test Parameter Settings
Number of satellites	8
HDOP range	1.1 to 1.6
Propagation conditions	AWGN
GPS time assistance	Coarse, ± 2 s
Phone response time	20 seconds for LPP 16 seconds for RRLP
Acceptable response time to network	20.3 seconds
Success rate	95 successful fixes with the necessary accuracy out of 100 attempts (95%)
Position accuracy	101.3 m
Maximum sensitivity step size	0.5 dB

Note that the satellite power levels for the sensitivity test are such that there will be one satellite, which transmits 5 dB higher than the other satellites. The reported sensitivity level will be based on the power of the weaker satellites. The 1 dB test tolerance or test parameter relaxation for the absolute GPS signal level in C.2.1 in 3GPP TS 37.571-1 shall not be used in reporting the sensitivity measurement results. The above clarification means that, at signal levels -141 dBm and -146 dBm will lead to a sensitivity level report of -146 dBm, rather than -147 dBm. The GPS engine shall be cold started for every location attempt.

The GPS satellite simulator shall implement GNSS Scenario #1 as defined in 3GPP TS 37.571-5 Section 6.2.1.2.1 for satellites simulated for 3GPP TS 37.571-1 subclause 7, sub-test 1. The scenario shall be reset before the viable running time expires as defined in the same clause. The scenario shall be executed as required in Section 7.1.1 Sub-Test Number 1 of 3GPP TS 37.571-1 except that random errors shall not be applied to the UE locations and the alternating locations requirement shall not be implemented. Early delivery of Acquisition Assistance Data and Reference Time Data may be provided to the EUT and a SUPL 2.0 Positioning session shall be used over the wireless data connection.

Unless otherwise specified, GPS sensitivity tests will be performed for the following LTE bands for the channel numbers and the allocations specified in Table 6-18: LTE Bands 2, 4, 5, 12, 13, 14, 17, 25, 26 and 41. For LTE Band 13, the device shall be tested with an UL RB allocation of 12 RB's with an RBstart of 38 and with an UL RB allocation of 1 RB with an RBstart of 49 as opposed to the UL allocation specified in Table 6-18. If the device supports Band 25 and Band 2, then testing is only required to be completed in Band 25. If the device supports Band 26 and Band 5, then testing is only required to be completed in Band 26. The transmit power shall be set the maximum by sending continuous uplink power control “up” commands in every uplink scheduling information to the UE and allowing at least 200ms for the UE to reach its maximum level.

The conducted GPS sensitivity of the EUT shall also be measured at the antenna connector, if available. It is preferable that the EUT be the same as utilized for the TIS measurements. However, if the EUT does not readily support an antenna port for conducted measurements, a separate modified EUT may be provided for all conducted measurements. If no connector is available, the conducted sensitivity measurement is not required. Ideally, the sensitivity measurement will be performed with the same instrumentation in an equivalent configuration in order to minimize the measurement uncertainty involved. A different sensitivity measurement device may be used as long as any differences in absolute measurement accuracy are accounted for, either in corrections to the recorded sensitivity level or increased reported measurement uncertainty for the conducted measurement. Refer to Appendix A.3 for more information on conducted sensitivity measurements and cabling setups.

6.13.3.1.3 Radiated GPS Intermediate Channel Degradation Measurement

Devices supporting UE assisted A-GPS can perform this section, however devices supporting UE based A-GPS may not be able to perform this section. If a device supports both methods, then the radiated GPS intermediate channel degradation measurement may just be done using UE assisted A-GPS. The radiated GPS intermediate channel degradation will apply to both UE assisted and UE based A-GPS. If a device only supports UE based A-GPS then the C/N_0 data shall be stored in the EUT's internal memory in the format specified in Section 6.17.4.1. Another alternative for a device, which only supports UE based A-GPS, is to enable UE assisted A-GPS or some other test mode, just to perform the radiated GPS intermediate channel degradation measurement. If used, the test mode shall allow for the following exceptions in the device firmware for UE based tests:

- Measure Position Response Message (RRLP): As referenced in TS 44.031 v7.8, both “locationInfo” and “gps-MeasureInfo” IEs shall be included.

- Provide Location Information (LPP): In the *A-GNSS-ProvideLocationInformation* IE of the LPP Provide Location Information message as referenced in TS 36.355 Section 6.5.2.5, both "gnss-SignalMeasurementInformation" and "gnss-LocationInformation" shall be included.

In addition to performing the sensitivity scan at the mid channel, the difference in sensitivity of the GPS receiver will be evaluated with the cellular transceiver active for all intermediate cellular channels. This difference in sensitivity will be determined by measuring the difference in radiated C/N_0 with the LTE transmitter active at maximum power with the mid channel and with each of the intermediate channels. This test will be called the GPS intermediate channel degradation test.

For this test, the radiated C/N_0 shall be measured at the position/polarization where the peak C/N_0 was obtained in the upper hemisphere.

The C/N_0 measurements for each band/antenna configuration should be performed without disturbing the setup to minimize uncertainty in GPS intermediate channel degradation test. If the EUT will be disturbed during the test, a corresponding uncertainty component shall be included in the uncertainty budget.

The basic test sequence for performing this GPS intermediate channel degradation test is as follows:

1. Set up the satellite simulator with 8 satellites at the same power. The GPS satellite power and scenario shall be set according to the recommendations in Section 6.13.3.1.1.
2. Enable a call using the appropriate LTE protocol.
3. Setup a SUPL 2.0 positioning session.
4. Enable the GPS engine.
5. Obtain a GPS lock and start tracking.
6. Set the LTE channel to the mid channel and TX power level to maximum power by sending continuous uplink power control "up" commands in every uplink scheduling information to the UE and allowing at least 200ms for the UE to reach its maximum level.
7. Transmit the C/N_0 of the visible GPS satellites over the existing LTE link. Record the average C/N_0 of the visible GPS satellites. If additional C/N_0 measurements are required to minimize uncertainty, the measurements should be made prior to moving to the next step. Calculate the average C/N_0 (or average over repeated measurements of averages) and linearize the result using the data from the earlier linearization process.
8. Change the LTE channel to a channel listed in Appendix K.4 as applicable. It is up to the implementer to determine how to change channels.
9. Transmit the C/N_0 of the visible GPS satellites over the existing LTE link. Record the average C/N_0 of the visible GPS satellites. If additional C/N_0 measurements are

required to minimize uncertainty, the measurements should be made prior to moving to the next step. Calculate the average C/N_0 (or average over repeated measurements of averages) and linearize the result using the data from the earlier linearization process.

10. Repeat steps 8. and 9. for each channel in Appendix K.4 as applicable for the appropriate LTE bands.

11. Repeat steps 6. through 10. for each LTE band.

Alternatively, the C/N_0 measurements defined above may be achieved by using the methodology defined for the radiated 3D C/N_0 pattern measurement defined in Section 6.13.3.1.1 except that TX power level will be set to maximum power by sending continuous uplink power control "up" commands in every uplink scheduling information to the UE and allowing at least 200ms for the UE to reach its maximum level. Early delivery of Acquisition Assistance Data and Reference Time Data may be provided to the EUT and a SUPL 2.0 positioning session shall be used over the wireless data connection.

The GPS intermediate channel degradation is the difference between the linearized average C/N_0 (or average over repeated measurements of averages) with the transmitter at the mid channel and the lowest linearized average C/N_0 (or average over repeated measurements of averages) with the transmitter at any intermediate channel (including the mid-channel). Therefore, the GPS intermediate channel degradation will always be zero or greater. Report the GPS intermediate channel degradation.

As specified above, the average Carrier-to-Noise (C/N_0) measurement of all visible GPS satellites at each instance in time will be used. Sufficient averaging over time of C/N_0 measurements shall be completed to ensure that the uncertainty is less than the value specified in the lab's uncertainty budget.

$GPSICD$ = GPS degradation due to intermediate channel jamming

$CNR_{midchannel}$ = Linearized C/N_0 with the mid-channel

$CNR_{mid\ IC}$ = minimum linearized C/N_0 across all intermediate cellular channels

$GPSICD = CNR_{midchannel} - CNR_{mid\ IC}$ (in dB)

6.13.3.2 Criteria

Results shall be reported as specified in Appendix B using the figures of merit given in Appendix B.2. Reports shall include results for all simulated-use configurations across all channels measured with the EUT antenna extended and retracted.

GPS intermediate channel degradation test results shall be provided in a file format equivalent to that specified in Appendix B.

TABLE 6-20 A-GPS WITH LTE MAXIMUM TIS/UHIS/PIGS LEVEL (IN DBM) REQUIREMENTS FOR THE PRIMARY MECHANICAL MODE

LTE Band	Positioning Method	Usage case	BHHL and BHHR			HL and HR		
			TIS	UHIS	PIGS	TIS	UHIS	PIGS
LTE 12	UE based	Held to head[1]	TBD	TBD	TBD	TBD	TBD	TBD
		Hand held only[2]	N/A	N/A	N/A	TBD	TBD	TBD
LTE 17		Held to head[1]	TBD	TBD	TBD	TBD	TBD	TBD
		Hand held only[2]	N/A	N/A	N/A	TBD	TBD	TBD
LTE 13		Held to head[1]	TBD	TBD	TBD	TBD	TBD	TBD
		Hand held only[2]	N/A	N/A	N/A	TBD	TBD	TBD
LTE 14		Held to head[1]	TBD	TBD	TBD	TBD	TBD	TBD
		Hand held only[2]	N/A	N/A	N/A	TBD	TBD	TBD
LTE 26		Held to head[1]	TBD	TBD	TBD	TBD	TBD	TBD
		Hand held only[2]	N/A	N/A	N/A	TBD	TBD	TBD
LTE 5		Held to head[1]	TBD	TBD	TBD	TBD	TBD	TBD
		Hand held only[2]	N/A	N/A	N/A	TBD	TBD	TBD
LTE 2		Held to head[1]	TBD	TBD	TBD	TBD	TBD	TBD
		Hand held only[2]	N/A	N/A	N/A	TBD	TBD	TBD
LTE 25		Held to head[1]	TBD	TBD	TBD	TBD	TBD	TBD
		Hand held only[2]	N/A	N/A	N/A	TBD	TBD	TBD
LTE 4		Held to head[1]	TBD	TBD	TBD	TBD	TBD	TBD
		Hand held only[2]	N/A	N/A	N/A	TBD	TBD	TBD
LTE 41		Held to head[1]	TBD	TBD	TBD	TBD	TBD	TBD
		Hand held only[2]	N/A	N/A	N/A	TBD	TBD	TBD

TABLE 6-20 A-GPS WITH LTE MAXIMUM TIS/UHIS/PIGS LEVEL (IN DBM) REQUIREMENTS FOR THE PRIMARY MECHANICAL MODE

LTE Band	Positioning Method	Usage case	BHHL and BHHR			HL and HR		
			TIS	UHIS	PIGS	TIS	UHIS	PIGS
LTE 12	UE Assisted	Held to head[1]	TBD	TBD	TBD	TBD	TBD	TBD
		Hand held only[2]	N/A	N/A	N/A	TBD	TBD	TBD
LTE 17		Held to head[1]	TBD	TBD	TBD	TBD	TBD	TBD
		Hand held only[2]	N/A	N/A	N/A	TBD	TBD	TBD
LTE 13		Held to head[1]	TBD	TBD	TBD	TBD	TBD	TBD
		Hand held only[2]	N/A	N/A	N/A	TBD	TBD	TBD
LTE 14		Held to head[1]	TBD	TBD	TBD	TBD	TBD	TBD
		Hand held only[2]	N/A	N/A	N/A	TBD	TBD	TBD
LTE 26		Held to head[1]	TBD	TBD	TBD	TBD	TBD	TBD
		Hand held only[2]	N/A	N/A	N/A	TBD	TBD	TBD
LTE 5		Held to head[1]	TBD	TBD	TBD	TBD	TBD	TBD
		Hand held only[2]	N/A	N/A	N/A	TBD	TBD	TBD
LTE 2		Held to head[1]	TBD	TBD	TBD	TBD	TBD	TBD
		Hand held only[2]	N/A	N/A	N/A	TBD	TBD	TBD
LTE 25		Held to head[1]	TBD	TBD	TBD	TBD	TBD	TBD
		Hand held only[2]	N/A	N/A	N/A	TBD	TBD	TBD
LTE 4		Held to head[1]	TBD	TBD	TBD	TBD	TBD	TBD
		Hand held only[2]	N/A	N/A	N/A	TBD	TBD	TBD
LTE 41		Held to head[1]	TBD	TBD	TBD	TBD	TBD	TBD
		Hand held only[2]	N/A	N/A	N/A	TBD	TBD	TBD

Note 1: Device operates held to the head and supports voice operation over the LTE airlink (e.g. VoIP)

Note 2: Device is hand held but does not support voice operation against the head while utilizing an LTE airlink (e.g., VoIP)

6.14 FLO (Forward Link Only)

This section removed for V3.2.

6.15 Alternate Test Procedure for TIS

This alternate test procedure significantly reduces the test time for TIS for multi-protocol phones, which have more than one protocol in the same frequency band. This alternate test procedure can be used to determine the offset in TIS between different protocols on equivalent

channels, as well as between different error rates and/or data rates using the same protocol on the same channel. "Equivalent channels" assumes that the two channels are close enough in frequency that the pattern does not change. A single point offset test or a multi-point offset test may be used.

This alternative test procedure for TIS cannot be used with dynamically tuned antennas when the tuning of the antenna changes between the reference protocol and the protocol being evaluated. The manufacturer needs to declare to the CATL when antennas are dynamically tuned in such a way that this alternative test procedure for TIS cannot be used.

It is recommended that voice digital protocols be given priority when doing full TIS measurements. For purposes of clarity for the following test procedure, test configuration A will be protocol/error rate/data rate for which a full TIS measurement is performed. Test configuration B will be the other protocol/error rate/data rate which will be tested using the single/multi-point radiated test.

This test sequence is repeated for each channel specified in the appropriate part of Section 6. This test sequence shall be repeated for each EUT antenna configuration (free space, head and hand phantom, hand phantom only, whip extended, whip retracted). The single point radiated sensitivity for both test configurations, the difference, and the calculated TIS for test configuration B shall be recorded.

Use of this alternate test method requires additional measurement uncertainty calculations, which are discussed in Section 7.4.

6.15.1 Single Point Offset Test

The TIS test for test configuration A shall be completed first according to the appropriate part of Section 6. After identifying the position and polarization for which the EUT has its maximum radiated sensitivity for one channel, the EUT should be placed in the same configuration. A radiated sensitivity measurement shall be first done in test configuration A according to the relevant procedures in Section 6. If possible without touching the phone, initiate a hand-off or change to test configuration B at the equivalent channel. Otherwise, initiate a call in test configuration B and go to the equivalent channel. If the phone must be handled in order to initiate a call in test configuration B, then an additional repositioning uncertainty must be included to account for positioning repeatability. Following that, a radiated sensitivity measurement shall be done in test configuration B according to the relevant procedures in Section 6. The two measurements shall be conducted as close in time as possible. The difference between these radiated tests shall then be used as an offset to the TIS for test configuration A in order to calculate the TIS for test configuration B.

6.15.2 Multi-point Offset Test

Multiple positions and polarizations shall be predetermined for comparing test configurations A and B. The test positions and polarizations shall be selected such that they are spread relatively evenly in time throughout the TIS test and are spread relatively evenly in space over the sphere. While the TIS test for test configuration A is being performed, measurements for test configuration B will be performed at those predetermined positions and polarizations.

This is accomplished at those predetermined positions and polarizations by:

1. Measuring the radiated sensitivity for test configuration A,
2. Handing-off or changing to test configuration B,
3. Measuring the radiated sensitivity for test configuration B,
4. Handing-off or changing to test configuration A,
5. Continuing the TIS test until another predetermined position and polarization is to be tested, at which time, steps 1 to 5 are repeated.

The difference between the averages of the radiated sensitivities at the predetermined positions and polarizations shall then be used as an offset to the TIS for test configuration A in order to calculate the TIS for test configuration B.

Note: *More than 4 test positions/polarizations are recommended to keep the measurement uncertainty low.*

Note: *This test procedure using multiple test positions/polarizations will have lower uncertainty than the test procedure using a single test position/polarization.*

Note: *Using higher error rates and higher data rates can result in significantly faster test times for TIS.*

6.16 Alternate Test Procedure for GSM TIS Using Less Than Maximum TX Power

This alternate test procedure is specifically to allow the radiated RX sensitivity testing for the 3D pattern for the GSM protocol to be done at low TX power levels. The purpose of this allowance is to enable the battery to last longer during testing, which in turn enables more automated testing without having to change the battery. In particular, more testing can be accomplished unattended over night.

The same low TX power must be used during the entire TIS measurement. The next step involves using something similar to the alternate test procedure for TIS (in Section 6.15).

After identifying the position and polarization for which the EUT has its maximum radiated sensitivity for one channel, the EUT shall be placed in the same configuration. A radiated

sensitivity measurement shall be first done using low TX power according to the relevant procedures in Section 6. Without touching the phone, change the TX power to maximum. Then a radiated sensitivity measurement shall be done using maximum TX power according to the relevant procedures in Section 6. The two measurements shall be conducted as close in time as possible. The difference between these radiated tests shall then be used as an offset to the TIS using low TX power in order to calculate the TIS with maximum TX power. This test sequence is repeated for each channel specified in the appropriate part of Section 6. This test sequence shall be repeated for each EUT antenna configuration (free space, head and hand phantom, hand phantom only, whip extended, whip retracted). The single point radiated sensitivity at low and maximum TX power, the difference, and the calculated TIS using maximum TX power shall be recorded.

The additional uncertainty associated with the single point test would need to be included, as discussed in Section 7.4.

Note: *Intermediate channel testing shall still be done using maximum TX power.*

6.17 Alternate TIS Test Procedure based on Receive Signal Strength (RSS)

This procedure details the methodology to be used when determining TIS using receive signal strength measurements. The test methodology will consist of four steps; RSS Pattern Measurement, RSS Pattern Linearization, Sensitivity Search, and Final TIS Calculation. The receive signal strength measurements that are available for any particular technology can vary. These may take the form of the following; RSSI (Receive Signal Strength Indicator), Carrier to Noise, Signal to Noise, Carrier to Interference, etc.

6.17.1 RSS Pattern Measurement

The RSS Pattern Measurement shall utilize the same spherical measurement procedure as specified in Section 6. A receive signal strength measurement shall be made at each polarization and point on the sphere. The dynamic range of the RSS measurement shall be at least 20 dB and the minimum RSS measurement level shall be at least 10 dB above the noise floor of the measurement capability. If the RSS measurement for a particular polarization or point is below the dynamic range of the measurement capability or cannot be obtained, the data point shall be recorded with a value that is no more than the lowest RSS measurement.

This receive signal strength measurement may be obtained in a number of different methods. The EUT may report the value via over-the-air messaging if the technology supports this mechanism. The EUT may record the values in non-volatile memory or RAM using an on-board application or test mode. The stored results would be extracted from the device via a data cable or via an over-the-air data connection supported by the EUT. If the results are extracted from the EUT after the test, there shall be a mechanism to reconcile the data with

each position. Each measurement point shall be sufficiently averaged to reduce uncertainty to the value defined in the uncertainty budget.

It is recommended that the RSS pattern measurement be performed by reporting the RSS measurement via over-the-air messaging if the Base Station Simulator for the technology supports that mechanism. It is also recommended that the RSS measurements be made with the transmitter enabled via normal call processing, a special test mode, or an on-board application if the technology being tested normally supports the use of a reverse link.

6.17.2 RSS Pattern Linearization

The RSS pattern measurements shall be linearized. The peak in the RSS pattern shall be determined from the data collected in Section 6.17.1. Re-position the EUT to the location of the maximum RSS. For GPS, the chosen peak shall be in the upper hemisphere. As an alternative, the RSS linearization data may be obtained using a conducted test setup but the additional uncertainty shall be accounted for in the uncertainty budget.

Receive signal strength measurements shall be made at a maximum of 1 dB steps from the peak RSS measurement to at least 10 dB below the peak RSS measurement made in Section 6.17.1. Care should be taken to avoid compression of the receiver or highly non-linear regions outside of the minimum linearization range specified above. These RSS measurements along with the corresponding signal level presented to the EUT shall be used to linearize the pattern data collected in Section 6.17.1 such that the pattern data corresponds to a dB for dB change in the signal level presented to the EUT. RSS data that falls within the utilized step size shall be linearly interpolated. The interpolation shall be done in dB as opposed to in linear units. The linearization may be accomplished through various methods such as, but not limited to, Best Fit Straight Line methods or piecewise linear methods, as long as the proper linearization uncertainty has been accounted for in the uncertainty budget. RSS data that falls outside of the data set that was used to determine the linearization data shall be linearized to a line that is extended using the same slope as determined above for the last set of data points used for linearization at the edge of the data set.

This receive signal strength measurement may be obtained in a number of different methods. The EUT may report the value via over-the-air messaging if the technology supports this mechanism. The EUT may record the values in non-volatile memory or RAM using an on-board application or test mode. The stored results would be extracted from the device via a data cable or via an over-the-air data connection supported by the EUT. In either case, the method used shall be the same method that was used for the RSS Pattern Measurement. Each measurement point shall be sufficiently averaged to reduce uncertainty to the value defined in the uncertainty budget.

It is recommended that the RSS pattern measurement be performed by reporting the RSS measurement via over-the-air messaging if the Base Station Simulator for the technology supports that mechanism. It is also recommended that the RSS measurements be made with the transmitter enabled via normal call processing, a special test mode, or an on-board

application if the technology being tested normally supports the use of a reverse link. In either case, the method used shall be the same method that was used for the RSS Pattern Measurement.

6.17.3 Sensitivity Search

The peak in the RSS pattern shall be determined from the data collected in Section 6.17.1. Re-position the EUT to the location of the maximum RSS. For GPS, the chosen peak shall be in the upper hemisphere. Care should be taken not to disturb the EUT between the RSS Pattern Linearization step and this step. If the EUT is disturbed or repositioned, an appropriate repositioning uncertainty contribution shall be taken. If the RSS linearization data was obtained via conducted test methods, the additional repositioning uncertainty contribution has already been taken in Section 6.17.2. For all cases, a repositioning uncertainty shall be taken due to the repositioning of the EUT after the pattern measurement in Section 6.17.1. Perform a single-point sensitivity measurement for the particular technology in accordance with the measurement methodology specified for that technology.

The single-point sensitivity measurement may be obtained in a number of different methods. The sensitivity measurement may be performed via over-the-air messaging if the technology supports this mechanism. The EUT may record the error rates versus signal level in non-volatile memory or RAM using an on-board application or test mode. The stored results would be extracted from the device via a data cable or via an over-the-air data connection supported by the EUT.

If the technology being tested supports an EIS measurement via over-the-air messaging, the EIS measurement shall be made in this configuration with the transmitter set to maximum output power. If the technology being tested normally uses a reverse link to communicate to a server, the EIS measurement shall be made with the reverse link transmitter at maximum output power and enabled via normal call processing, a special test mode, or an on-board application.

The conducted sensitivity of the EUT shall also be measured at the antenna connector, if available, on all applicable frequencies. It is preferable that the EUT be the same as utilized for the RSS measurements. However, if the EUT does not readily support an antenna port for conducted measurements, a separate modified EUT may be provided for all conducted measurements. If no connector is available, the conducted sensitivity measurement is not required. Ideally, the sensitivity measurement will be performed with the same instrumentation in an equivalent configuration in order to minimize the measurement uncertainty involved. A different sensitivity measurement device may be used as long as any differences in absolute measurement accuracy are accounted for, either in corrections to the recorded sensitivity level or increased reported measurement uncertainty for the conducted measurement. Refer to Appendix A.3 for more information on conducted sensitivity measurements and cabling setups.

6.17.4 RSS Data Format

This section specifies the format for EUT-generated RSS data used in the TIS pattern measurement process and other RSS-based tests under development. The EUT shall generate data in the specified format, either directly or via an intermediate data parser.

6.17.4.1 RSS Data Stored Locally on EUT

RSS data stored locally on the EUT during the pattern measurement process shall take the form of a comma-delimited ASCII text file. Each row or line of the file shall contain a single time stamped RSS measurement record. Each record shall terminate with a Carriage Return (decimal ASCII code 13) or Carriage Return/Line Feed combination (decimal ASCII codes 13+10).

Each measurement record or file line shall contain 6 fields as specified below separated by commas:

- **Date:** YYYY-MM-DD (e.g. “2008-03-15”)
- **Time:** HH:MM:SS.000 (e.g. “16:20:01.568”). 24-hour format. The number of decimal points for fractional seconds shall depend on the available time resolution of the EUT's underlying technology.
- **Signal Source:** Integer index indicating the signal source for air interfaces using multiple signal sources, e.g., multiple-satellite GPS scenarios. In cases where signal sources have standard numerical identifiers, such as GPS satellite IDs, this field shall contain that identifier. Otherwise, this field shall index starting from 0.
- **Antenna:** Integer index, starting from 0, indicating the antenna or receive chain for EUTs supporting multiple receivers. This value shall always be “0” for single-antenna devices.
- **RSS:** Received Signal Strength value (power in dBm; ratios in dB).
- **Phase:** Phase angle of received signal in radians. For dual receiver LTE devices, this may be the relative phase between the two receivers. This value shall always be “0” if no phase information is provided.

The date and time fields must represent accurate elapsed time over the data collection period, but they are not required to be synchronized to a specific time-of-day reference. However, if these time stamps are not explicitly synchronized to the time reference used by the range equipment, the test solution developer must provide a mechanism to account for the time offset between EUT data and any range-specific data (e.g. position) collected simultaneously.

The first example below shows a data segment for a single-antenna device generating no phase information, with a single signal source. The second example shows a data segment for a dual-antenna device generating phase information, with a single signal source.

Example RSS Data Segment for a Single-antenna Device Providing No Phase Information, with One Signal Source

```
2008-03-15,16:20:01.568,0,0,-83.22,0
2008-03-15,16:20:01.771,0,0,-83.17,0
2008-03-15,16:20:01.964,0,0,-82.89,0
2008-03-15,16:20:02.167,0,0,-82.83,0
2008-03-15,16:20:02.362,0,0,-82.97,0
2008-03-15,16:20:02.566,0,0,-83.04,0
2008-03-15,16:20:02.770,0,0,-83.38,0
...
```

Example RSS Data Segment for a Dual-antenna Device Providing Phase Information, with One Signal Source

```
2008-03-15,16:20:01.568,0,0,-83.22,1.22972
2008-03-15,16:20:01.771,0,1,-88.83,2.54263
2008-03-15,16:20:01.964,0,0,-82.89,1.26694
2008-03-15,16:20:02.167,0,1,-89.41,2.52346
2008-03-15,16:20:02.362,0,0,-82.97,1.22856
2008-03-15,16:20:02.566,0,1,-89.62,2.46119
2008-03-15,16:20:02.770,0,0,-83.38,1.13947
...
```

6.17.4.2 RSS Data Reported Via Over-The-Air Messaging

In the case where RSS data are reported via over-the-air messaging, data records shall be generated in a format identical to single lines of the data file format specified in Section 6.17.4.1 Alternatively, the data may be transmitted by the EUT in a native format and converted to the specified format upon receipt by a data parsing application.

6.17.5 Error Rate Data Format

This section specifies the format for EUT-generated error rate data used in the sensitivity search process. The EUT shall generate data in the specified format, either directly or via an intermediate data parser. This format is not applicable for the current GPS sensitivity search methodologies defined in Section 6.13.

6.17.5.1 Error Rate Data Stored Locally on EUT

Error rate data stored locally on the EUT during the sensitivity search process shall take the form of a comma-delimited ASCII text file. Each row or line of the file shall contain a single time stamped measurement record. Each record shall terminate with a Carriage Return (decimal ASCII code 13) or Carriage Return / Line Feed combination (decimal ASCII codes 13+10).

Each measurement record or file line shall contain 4 fields as specified below separated by commas:

- **Date:** YYYY-MM-DD (e.g. "2008-03-15")
- **Time:** HH:MM:SS.000 (e.g. "16:20:01.568"). 24-hour format. The number of decimal points for fractional seconds shall depend on the available time resolution of the EUT's underlying technology.
- **Errors:** Number of errors (bits, frames, packets, blocks, etc., depending on technology) or acquisition failure count for sensitivity definitions based on probability of acquisition.
- **Total:** Total observed number of bits, frames, packets, blocks, etc. or acquisition attempt count for sensitivity definitions based on probability of acquisition.

The date and time fields must represent accurate elapsed time over the data collection period, but they are not required to be synchronized to a specific time-of-day reference. However, if these time stamps are not explicitly synchronized to the time reference used by the range equipment, the test solution developer must provide a mechanism to account for the time offset between EUT data and any range-specific data (e.g., downlink power) collected simultaneously.

The example below shows an error rate data segment illustrating a hypothetical sensitivity search. Although not required, error rate data are typically reported at a fixed interval representing a fixed number of bits, frames, packets, acquisition attempts, etc.

Example Error Rate Data Segment

```
2008-03-15,21:40:01.568,0,602
2008-03-15,21:40:02.571,0,602
2008-03-15,21:40:03.564,0,602
2008-03-15,21:40:04.567,0,602
2008-03-15,21:40:05.562,1,602
2008-03-15,21:40:06.566,4,602
2008-03-15,21:40:07.570,17,602
...
```

6.17.5.2 Error Rate Data Reported Via Over-The-Air Messaging

In the case where error rate data are reported via over-the-air messaging, data records shall be generated in a format identical to single lines of the data file format specified in Section 6.17.5.1. Alternatively, the data may be transmitted by the EUT in a native format and converted to the specified format upon receipt by a data parsing application.

6.17.6 Final TIS Calculation

The final TIS and other spatially averaged quantities shall be calculated per Appendix B.2.3, Appendix B.2.5 and Appendix B.2.6. In all cases, the linearized RSS values shall be used in the calculations.

Section 7 Measurement Uncertainty

For the TRP and TIS tests described in this Test Plan, the chosen method for calculation of the measurement uncertainty is based on the "Guide to the Expression of Uncertainty in Measurement" published by the International Organization for Standardization (ISO) Geneva, Switzerland 1995.

The ISO guide gives a general approach to calculating measurement uncertainty that is applicable to all types of measurements, the process involving the combination of the standard deviations (known as standard uncertainties) of the individual contributors by the root-sum-squares method. It does, however, contain some underlying assumptions that have, in the past, made it difficult to apply the approach directly to radiated measurements. For example, it requires that all the contributors to the overall uncertainty are independent, all in the same unit and are additive, requirements that lead to difficulties particularly when contributors in %, volts and dB are involved. ETSI documents TR 102 273 and TR 100 028 have specifically addressed these problems for radiated measurements and have derived a method for converting standard uncertainties from one unit (%, volts, dB) into another. Table 7-1 gives the relevant conversion factors, but TR 102 273 should be fully consulted before they are used, because there are some conditions regarding their magnitudes.

TABLE 7-1 STANDARD UNCERTAINTY CONVERSION FACTORS

Converting from standard uncertainties in …:	Conversion factor multiply by:	To standard uncertainties in …:
dB	11.5	voltage %
dB	23.0	power %
power %	0.0435	dB
power %	0.5	voltage %
voltage %	2.0	power %
voltage %	0.0870	dB

The requirement that the uncertainties are additive dictates that in radiated measurements (where all of the uncertainties multiply), all the individual uncertainties should be converted to dB (if necessary) so that the dBs can be added.

So, using the above to determine the method for uncertainty analysis in TRP and TIS radiated measurements, the following illustrates the practical steps involved:

1. Compile a complete list of the individual measurement uncertainties that contribute to a measurement;
2. Determine the maximum value of each uncertainty;
3. Determine the distribution of each uncertainty (rectangular, U-shaped, etc);
4. Calculate (if necessary) the standard uncertainty (i.e., standard deviation) of each uncertainty;
5. Convert the units (if necessary) of each uncertainty into the chosen unit i.e. dB;
6. Combine ALL the standard uncertainties by the root-sum-squares method to derive the 'combined standard uncertainty';
7. Under the assumption that the probability distribution of the combined standard uncertainty is Gaussian/Normal, multiply the resulting combined standard uncertainty by an expansion factor '*k*' (taken from Student's T-distribution, W.S. Gosset 1908) to derive the 'expanded uncertainty' for a given confidence level. All expanded uncertainties are quoted to 95% confidence level, so *k* is taken as 2 (theoretically *k* should be 1.96, but for convenience, the value 2 had been agreed). Expressed a different way, this gives 95% confidence that the true value is within 2 times the combined standard uncertainty of the measured value.

It is not suggested that this process be carried out at every individual test frequency since this would be extremely time consuming and tedious. Rather, for each band (e.g. 824 - 894 MHz for Cellular, 1850 - 1990 MHz for PCS, etc.), unless only a single value is specified, all the uncertainties should be evaluated over the entire frequency range for that band and the worst-case values within the band taken and used in the calculations. Admittedly, this could lead to slightly pessimistic overall values, but the bonus is in reduced measurement time and a one-hit process that will be applicable to any frequency within the relevant band.

The uncertainty contributions are determined experimentally. The relative uncertainty parameters can also be determined by simulations provided that it can be guaranteed that the relative accuracy is significantly better than 0.1 dB (see Appendix I).

In Sections 7.1 and 7.2, this calculation process is fully described for the TRP and TIS tests of this Test Plan respectively.

7.1 TRP Tests

The TRP test method determines the unknown performance of the EUT by correcting the absolute power measurements at the input port of the test instrumentation using a relative correction value determined using the range reference measurement described in Section 4. This correction value offsets each power measurement back to the equivalent power that would have been radiated by a theoretical isotropic radiator in order to produce the same

measured level. This corrected value is known as the Effective Isotropic Radiated Power (EIRP), which is then integrated across the total spherical surface to determine the Total Radiated Power. To reduce the overall measurement uncertainty, the same cable configuration and equipment used during the reference measurement (Section 4) should also be used during the EUT measurement phase, rather than measuring individual components and applying the corrections separately. In this way, a number of the individual uncertainty contributions will cancel simply because they contribute the same uncertainty to both the reference measurement and the EUT measurement, e.g. the uncertainty in the insertion loss of the cable(s) between the Measurement Antenna and the Spectrum Analyzer/Measurement Receiver, the uncertainty in the Gain of the Measurement Antenna, etc.

7.1.1 EUT Measurement

In this part of the measurement, the EUT and any associated phantom combination is positioned on the turntable within the quiet zone of the chamber, trying to place its reference point (as defined in Appendix A.1**)** on the axes of rotation in both Theta and Phi (if present). At the other end, the Spectrum Analyzer, Measurement Receiver or Base Station simulator will be connected via a cable and/or attenuator to the Measurement Antenna.

The identified uncertainties in this part are listed in Table 7-2. Where 0.00 dB values are entered in Table 7-2, this means that the uncertainty contribution appears in the reference measurement also and therefore cancels. It is a critical step in any such uncertainty evaluation to determine precisely where the transition occurs between the equipment that appears exactly in both measurements, vs. the equipment that changes between the reference measurement and the EUT measurement. The uncertainty contributions that can be assumed to cancel are those contributions associated with system components that are measured in the reference measurement. Since components such as the measurement antenna and associated cables are measured in the reference measurement, there is one lump uncertainty associated with that measurement, rather than the individual uncertainties of each component.

Appendix G gives guidance on calculating the values to be entered in Table 7-2.

TABLE 7-2 TRP STANDARD UNCERTAINTIES FOR THE CONTRIBUTIONS IN THE EUT MEASUREMENT PART

Description of uncertainty contributions	Standard Uncertainty, dB
Mismatch: measurement instrument (i.e., between the receiving device and the rest of the signal path [the measurement path])	See Appendix G.1
Cable factor: measurement antenna cable (i.e. how the cable interacts with the measurement)	See Appendix G.2
Insertion loss: measurement antenna cable	0.00
Insertion loss: measurement antenna attenuator (if present)	0.00
Receiving device: absolute level	See Appendix G.4
Antenna: gain of the measurement antenna	0.00
Measurement distance: • offset of EUT phase center from axis(es) of rotation • 'blocking' effect of EUT on measurement antenna - VSWR - Chamber standing wave • phase curvature across the EUT	See Appendix G.7
Signal level ripple within quiet zone	See Appendix G.8.1
EUT: influence of the ambient temperature on the ERP of the carrier	See Appendix G.9
Head phantom uncertainty	See Appendix G.10.2, Appendix C.2.1
Hand phantom uncertainty	See Appendix G.10.3 and Appendix G.10.8
Head phantom fixture uncertainty	See Appendix G.10.4
Hand phantom fixture uncertainty	See Appendix G.10.4 and Appendix G.10.8

TABLE 7-2 TRP STANDARD UNCERTAINTIES FOR THE CONTRIBUTIONS IN THE EUT MEASUREMENT PART

Description of uncertainty contributions	Standard Uncertainty, dB
EUT positioning uncertainty	See Appendix G.21 and Appendix G.10.8
Miscellaneous uncertainty (measurement system repeatability)	See Appendix G.13
Special considerations for notebook computers	See Appendix G.19
Frequency flatness and interpolation error	See Appendix G.22

Once all the relevant standard uncertainty values in Table 7-2 have been calculated, they should be combined by root-sum-squares to give the combined standard uncertainty $u_{c\ contribution\ from\ the\ EUT\ measurement}$ for this part of the test.

7.1.2 Reference Measurement

This is the Range Reference Measurement as given in Section 4, the output of which is the Path Loss. It is believed that the uncertainty of the path loss calculation is a significant factor dictating the accuracy of the measured TRP value. Any error in the path loss calculation (e.g., error in the gain of the reference antenna) will result in an offset in the TRP value.

The contributors to the overall uncertainty of this part of the measurement are given in Table 7-3. Again, the contributors that appear in both parts of the measurement are put equal to 0.00 because they have the same effect in both parts, provided the relevant parts of the test set-up have not been changed. Once all the standard uncertainty values have been derived, they shall be combined by root-sum-squares to give the following combined standard uncertainty $u_{c\ contribution\ from\ the\ reference\ measurement}$ for this part of the test.

Appendix G gives guidance on calculating the values to be entered in Table 7-3.

TABLE 7-3 STANDARD UNCERTAINTIES FOR THE CONTRIBUTIONS TO THE REFERENCE MEASUREMENT

Description of uncertainty contributions	Standard Uncertainty, dB
Mismatch: cable reference measurement (i.e., between the reference cable and the loopback cable)	See Appendix G.1
Mismatch: reference antenna (i.e., between the reference cable and the reference antenna)	See Appendix G.1
Mismatch: measurement path (i.e., between the loopback cable and the rest of the cable that connects to the measurement equipment)	See Appendix G.1
Signal generator: absolute output level	See Appendix G.5
Signal generator: output level stability	See Appendix G.5
Insertion loss: calibrated reference antenna cable	See Appendix G.3
Insertion loss: measurement antenna cable	0.00
Insertion loss: calibrated reference antenna attenuator (if present)	See Appendix G.3
Insertion loss: measurement antenna attenuator (if present)	0.00
Receiving device: absolute level	See Appendix G.4
Measurement distance: offset of phase center of calibrated reference antenna from the axis(es) of rotation	See Appendix G.7.2
Signal level ripple within quiet zone	See Appendix G.8.2
Antenna: gain of the calibrated reference antenna	See Appendix G.6
Antenna: gain of the measurement antenna	0.00

7.1.3 Calculation of the Combined and Expanded Uncertainties for the Overall TRP Measurement

Having calculated the combined standard uncertainties from the two parts of the measurement, they should be combined as follows to derive the overall combined standard uncertainty:

$$u_c = \sqrt{u_{c\ \text{contribution from the EUT measurement}}^2 + u_{c\ \text{contribution from the reference measurement}}^2}$$

From this, the expanded uncertainty, U, is calculated as $U = 2 \cdot u_c$ for a 95 % confidence level.

This is the resulting value of the TRP expanded uncertainty and should be stated in the results sheet.

7.2 TIS Tests

The TIS test method is similar to the TRP method above, in that the range reference measurement is used to correct the unknown performance of the EUT back to values relative to that of a theoretical isotropic receiver. In this case, the correction value offsets each sensitivity level measurement back to the equivalent sensitivity level of a theoretical isotropic receiver exposed to an incoming isotropic wave with the same magnitude. This corrected value is known as the Effective Isotropic Sensitivity (EIS), which is then integrated across the total spherical surface to determine the Total Isotropic Sensitivity. As above, a number of individual uncertainty contributions will cancel, provided there have only been a minimum number of changes between the two parts of the measurement.

7.2.1 EUT Measurement

In this part of the measurement, the EUT is positioned within the quiet zone of the turntable, again trying to position its ear reference point on the axes of rotation in both azimuth and elevation (if present). At the other end, the Base Station Simulator will be connected via a cable and/or attenuator to the Measurement Antenna.

The identified uncertainties in this part are listed in Table 7-4.

Appendix G gives guidance on calculating the values to be entered in Table 7-4.

TABLE 7-4 TIS STANDARD UNCERTAINTIES FOR THE CONTRIBUTIONS IN THE EUT MEASUREMENT PART

Description of uncertainty contributions	Standard Uncertainty, dB
Mismatch: measurement instrument (i.e., between the transmitting device and the rest of the signal path [the measurement path])	See Appendix G.1
Base station/satellite simulator: absolute output level	See Appendix G.5
Base station/satellite simulator: output level stability	See Appendix G.5
Cable factor: measurement antenna cable (i.e. how the cable interacts with the measurement)	0.00
Insertion loss: measurement antenna cable	0.00
Insertion loss measurement antenna attenuator (if present)	0.00
Sensitivity search step size	See Appendix G.11
EUT influence of ambient temperature on the EIS	See Appendix G.9
Measurement distance: • offset of EUT phase center from axis(es) of rotation • 'blocking' effect of EUT on measurement antenna - VSWR - Chamber standing wave • phase curvature across the EUT	See Appendix G.7
Signal level ripple within quiet zone	See Appendix G.8.1
Antenna: gain of the measurement antenna	0.00
Head phantom uncertainty	See Appendix G.10.2, Appendix C.2.1

TABLE 7-4 TIS STANDARD UNCERTAINTIES FOR THE CONTRIBUTIONS IN THE EUT MEASUREMENT PART

Description of uncertainty contributions	Standard Uncertainty, dB
Hand phantom uncertainty	See Appendix G.10.3 and Appendix G.10.8
Head phantom fixture uncertainty	See Appendix G.10.4
Hand phantom fixture uncertainty	See Appendix G.10.4 and Appendix G.10.8
EUT positioning uncertainty	See Appendix G.21 and Appendix G.10.8
Coarse sampling grid contribution	See Appendix G.12
Miscellaneous uncertainty	See Appendix G.13
Special considerations for notebook computers	See Appendix G.19
Frequency flatness and interpolation error	See Appendix G.22
The following additional items apply to RSS-based TIS:	
Base station/satellite simulator: relative output level	See Appendix G.5
EUT repositioning uncertainty	See Appendix G.21
Linearization of conducted/radiated RSS measurement	See Appendix G.16
Uncertainty of RSS data from EUT	See Appendix G.17
Quantization of EUT reporting mechanism for RSS data	See Appendix G.18

The standard uncertainties from Table 7-4 should be combined by root-sum-squares to give the combined standard uncertainty $u_{c\ contribution\ from\ the\ EUT\ measurement}$ for this part of the test.

7.2.2 Reference Measurement

This is the identical analysis to that given in Section 7.1.2 above since it is the same Range Reference Measurement as described in Section 4, the output of which is the Path Loss.

The contributors to the overall uncertainty of this part of the measurement are given in Table 7-5. Again, those contributors that appear in both parts of the measurement are put equal to 0.00 because they have the same effect in both parts. Once all the standard uncertainty values

have been derived, they should be combined by root-sum-squares to give the combined standard uncertainty $u_{c\ contribution\ from\ the\ reference\ measurement}$ for this part of the test.

Appendix G gives guidance on calculating the values to be entered in Table 7-5.

TABLE 7-5 STANDARD UNCERTAINTIES FOR THE CONTRIBUTIONS TO THE REFERENCE MEASUREMENT

Description of uncertainty contributions	Standard Uncertainty, dB
Mismatch: cable reference measurement (i.e., between the reference cable and the loopback cable)	See Appendix G.1
Mismatch: reference antenna (i.e., between the reference cable and the reference antenna)	See Appendix G.1
Mismatch: measurement path (i.e., between the loopback cable and the rest of the cable that connects to the measurement equipment)	See Appendix G.1
Signal generator: absolute output level	See Appendix G.5
Signal generator: output level stability	See Appendix G.5
Insertion loss: Calibrated reference antenna cable	See Appendix G.3
Insertion loss: measurement antenna cable	0.00
Insertion loss: calibrated reference antenna attenuator (if present)	See Appendix G.3
Insertion loss: measurement antenna attenuator (if present)	0.00
Receiving device: absolute level	See Appendix G.4
Measurement distance: offset of phase center of calibrated reference antenna from the axis(es) of rotation	See Appendix G.7.2
Signal level ripple within quiet zone	See Appendix G.8.2
Antenna: gain of the calibrated reference Antenna	See Appendix G.6
Antenna: gain of the measurement antenna	0.00

7.2.3 Calculation of the Combined and Expanded Uncertainties for the Overall TIS Measurement

Having calculated the combined standard uncertainties from the two parts of the measurement, they should be combined as follows to derive the overall combined standard uncertainty:

$$u_c = \sqrt{u_{c\ \text{contribution from the EUT measurement}}^2 + u_{c\ \text{contribution from the reference measurement}}^2}$$

From this, the expanded uncertainty, U, is calculated as $U = 2 \cdot u_c$ for a 95 % confidence level.

This is the resulting value of the TIS expanded uncertainty and should be stated in the results sheet.

7.3 Alternate Test Procedure for TRP Measurements

For purposes of clarity, test configuration A will be the reference protocol for which a full TRP measurement is performed. Test configuration B will be the other protocol to be tested using the single/multi point radiated test.

Since this alternative measurement is a relative measurement, it will not only inherit the same uncertainties as those in the full 3D TRP measurement for test configuration A but will additionally include a small number of extra uncertainties. These extra uncertainties shall be combined with the combined uncertainty of the full TRP measurement by root-sum-squares in order to derive an overall estimate for the uncertainty of this relative measurement procedure that results in an absolute level for test configuration B TRP.

Since this is a relative measurement, many of the uncertainties associated with measuring test configuration B and test configuration A with the phone in the same position, near the same time, will be the same and cancel. Therefore they will not contribute to the relative measurement. The uncertainties, which will cancel, include mismatch between measurement antenna and receiving device, cable effects, insertion loss of the measurement antenna cable and attenuator, measurement antenna gain, measurement distance, signal level ripple within quiet zone, influence of ambient temperature on radiated power, and dissimilarity between calibration antenna and EUT. The error/uncertainty contribution for each of the above items is listed in Table 7-3. If the phone is not handled between measuring both test configurations, then the positioning error of EUT uncertainty will not contribute to this measurement. If the phone is handled between measuring both test configurations, then this uncertainty should be included in this measurement.

One of the additional sources of uncertainty is the variation in gain pattern over frequency. This will have a small impact if the channel bandwidth of test configuration A and test configuration B is different. For example, for CDMA and GSM the bandwidths are 1.24 MHz vs. 200 kHz. Other protocol pairs may have no variation, because their channel bandwidths are the same.

Another additional uncertainty is that associated with determining the difference in received levels of the test configurations. The magnitude of this uncertainty is minimized if the same receiving device is used for both measurements. Finally a miscellaneous uncertainty component is considered for the relative measurement.

Other than the uncertainties identified above, the test configuration B measurement will inherit the exact same errors as the test configuration A measurement.

TABLE 7-6 ADDITIONAL UNCERTAINTIES BETWEEN RELATIVE MEASUREMENT VS. FULL TRP MEASUREMENT

Description of uncertainty contributions	Added Uncertainty, dB
Mismatch: receiving part (i.e., between receiving device and measurement antenna)	0.00
Cable factor: measurement antenna cable (i.e. how the cable interacts with the measurement)	0.00
Insertion loss: measurement antenna cable	0.00
Insertion loss: measurement antenna attenuator (if present)	0.00
Receiving device: absolute level	See Appendix G.4
Antenna: gain of the measurement antenna	0.00
Measurement distance: • offset of EUT phase center from axis(es) of rotation • 'blocking' effect of EUT on measurement antenna - VSWR - Chamber standing wave • phase curvature across the EUT	0.00
Signal level ripple within quiet zone	0.00
Influence of the ambient temperature on test equipment	0.00
EUT repositioning uncertainty	See Appendix G.21
Miscellaneous uncertainty	See Appendix G.13
Uncertainty due to difference in gain of the test antenna over the different channel bandwidths	See Appendix G.20

Calculation of absolute uncertainty for TRP calculated using a relative single-point/multi-point radiated measurement:

The non-zero uncertainty values in the table above shall be combined by root-sum-squares to produce:

$U_{c\ TRP\ relative\ measurement}$

The overall uncertainty for the measurement is then:

$$u_c = \sqrt{u_{c\ TRP\ relative\ measurement}^2 + u_{c\ full\ TRP\ measurement}^2}$$

From this, the expanded uncertainty, U, is calculated as $U = 2 \cdot u_c$ for a 95% confidence level.

This is the resulting value of the TRP expanded uncertainty for the alternate measurement procedure and should be stated in the results sheet.

7.4 Alternate Test Procedure for TIS Measurements

For purposes of clarity, test configuration A will be protocol/error rate/data rate for which a full TIS measurement is performed. Test configuration B will be the other protocol/error rate/ data rate which will be tested using the single/multi-point radiated test.

Since this alternative measurement is a relative measurement, it will not only inherit the same uncertainties as those in the full 3D TIS measurement for test configuration A but will additionally include a small number of extra uncertainties. These extra uncertainties shall be combined with the combined uncertainty of the full TIS measurement by root-sum-squares in order to derive an overall estimate for the uncertainty of this relative measurement procedure that results in an absolute level for test configuration B TIS.

Since this is a relative measurement, many of the uncertainties associated with measuring test configuration B and test configuration A with the phone in the same position, near the same time, will be the same and cancel. Therefore they will not contribute to the relative measurement. The uncertainties, which will cancel, include mismatch between measurement antenna and receiving device, cable effects, insertion loss of the measurement antenna cable and attenuator, measurement antenna gain, measurement distance, signal level ripple within quiet zone, influence of ambient temperature on radiated sensitivity, and dissimilarity between calibration antenna and EUT. The error/uncertainty contribution for each of the above items is listed in Table 7-4. If the phone is not handled between measuring both test configurations, then the positioning error of EUT uncertainty will not contribute to this measurement. If the phone is handled between measuring both test configurations, then this uncertainty should be included in this measurement.

In some cases, the Alternate Test Procedure for TIS Measurements uncertainty will need to be considered multiple times. For example with CDMA, if the spherical pattern measurements are made using a 2% FER limit and subsequently a 0.5% FER limit is used to normalize the TIS measurement, an Alternate Test Procedure for TIS Measurements uncertainty would be required to be taken for this normalization. Subsequently, if the CDMA 1xEV-DO TIS is determined from the delta in the sensitivity level using a 0.5% FER/PER limit between 1xEV-DO and CDMA using CDMA as the primary method data, another independent Alternate Test Procedure for TIS Measurements uncertainty would be required to be taken.

One of the additional sources of uncertainty is the variation in gain pattern over frequency. This will have a small impact if the channel bandwidth of test configuration A and test configuration B is different. For example, for CDMA and GSM the bandwidths are 1.24 MHz vs. 200 kHz. Other test configuration pairs may have no variation, because their channel bandwidths are the same.

Another additional uncertainty is that associated with determining the difference in received levels of the test configurations. The magnitude of this uncertainty is minimized if the same base station simulator is used for both measurements. Finally a miscellaneous uncertainty component is considered for the relative measurement.

Other than the uncertainties identified above, the test configuration B measurement will inherit the exact same errors as the test configuration A measurement.

TABLE 7-7 ADDITIONAL UNCERTAINTIES BETWEEN RELATIVE MEASUREMENT VS. FULL TIS MEASUREMENT

Description of uncertainty contributions	Added Uncertainty, dB
TIS normalization uncertainty	See Appendix G.14
Mismatch: receiving part (i.e., between receiving device and measurement antenna)	0.00
Cable factor: measurement antenna cable (i.e., how the cable interacts with the measurement)	0.00
Insertion loss: measurement antenna cable	0.00
Insertion loss: measurement antenna attenuator (if present)	0.00
Base station simulator: absolute/relative level	See Appendix G.5
Antenna: gain of the measurement antenna	0.00
Measurement distance: • offset of EUT phase center from axis(es) of rotation • 'blocking' effect of EUT on measurement antenna - VSWR - Chamber standing wave • phase curvature across the EUT	0.00
Signal level ripple within quiet zone	0.00
Influence of the ambient temperature on the radiated sensitivity of the test equipment	0.00
EUT repositioning uncertainty	See Appendix G.21

TABLE 7-7 ADDITIONAL UNCERTAINTIES BETWEEN RELATIVE MEASUREMENT VS. FULL TIS MEASUREMENT

Description of uncertainty contributions	Added Uncertainty, dB
Miscellaneous uncertainty	See Appendix G.13
Uncertainty due to difference in gain of the test antenna over the different channel bandwidths	See Appendix G.20

Calculation of absolute uncertainty for TIS calculated using a relative single-point/multi-point radiated measurement:

The non-zero uncertainty values in the table above shall be combined by root-sum-squares to produce:

$u_{c\ TIS\ relative\ measurement}$

The overall uncertainty for the measurement is then:

$$u_c = \sqrt{u_{c\ TIS\ relative\ measurement}^2 + u_{c\ full\ TIS\ measurement}^2}$$

From this, the expanded uncertainty, U, is calculated as $U = 2 \cdot u_c$ for a 95% confidence level.

This is the resulting value of the TIS expanded uncertainty for the measurement and should be stated in the results sheet.

7.5 Criteria—Measurement Uncertainty

The results of the calculations for expanded uncertainty for both TRP and TIS measurements shall be reported, along with full documentation to support the resulting values. The test performance requirements shall not be adjusted by the measurement uncertainty when determining compliance of the EUTs.

The expanded TRP and TIS uncertainties must not exceed the values in Table 7-8 at a 95% confidence level.

TABLE 7-8 EXPANDED UNCERTAINTY MAXIMUM LIMITS FOR DIFFERENT CONFIGURATIONS FOR TRP AND TIS

Expanded Uncertainty (dB)		
Test Configuration	**TRP**	**TIS**
Free Space	2	2.3
Beside Head and Hand Left and Beside Head and Hand Right	2.4	2.6
Hand Left and Hand Right	2.2	2.4

Appendix A Test Set-up Configurations (Normative)

This appendix defines the required orientation of the EUT and any required phantoms relative to a Cartesian (XYZ) coordinate system and illustrates the starting orientation of that coordinate system for the typical spherical measurement systems (distributed or combined axis). It also includes schematics of typical instrumentation configurations. Alternate setups are allowed as long as they meet the criteria specified in this Test Plan and any additional uncertainty contributions are accounted for. The general requirement is that the test setup be capable of holding the EUT both in free space and with head/hand phantoms (see Appendix C). The performance of the test site must be determined as detailed in Section 3.

A.1 Positioning Requirements and Coordinate Systems

The test system must be capable of holding the EUT and any associated head/hand phantoms (defined in Appendix C). The hardware and positioners used to accomplish this must be made of low dielectric material (dielectric constant less than 5.0 and a loss tangent less than 0.05) so as to produce a minimal impact on overall measurement uncertainty. The measurement uncertainty due to any components not included in the ripple test shall be assessed according to Appendix G. As the EUT will be held in multiple configurations (free space, head and hand phantom [left and right], hand phantom only [left and right]), considerable care must be given to the design and implementation of the EUT holding fixtures so as to meet all of these requirements.

All of the fixtures and tools referenced shall be fabricated using the CAD files obtained from CTIA.

While different spherical measurement systems may require a different starting orientation of the EUT, the relative coordinate system for the EUT and head/hand phantoms shall remain the same independent of test site implementation.

The following subsections detail the positioning requirements and coordinate systems for the various required test configurations.

A.1.1 Free-Space

The “free-space” position and coordinate system are defined as follows:

1. Ready the EUT for operation, if necessary.
2. Define two imaginary lines on the EUT: the vertical centerline and the horizontal line. The vertical centerline passes through two points on the front side of the EUT: the midpoint of the width w_t of the EUT at the level of the earpiece (point A on Figure A-1), and the midpoint of the width w_b of the bottom of the EUT (point B).

The horizontal line is perpendicular to the vertical centerline and passes through the center of the earpiece (see Figure A-1). The two lines intersect at point A. Note that for many EUT's, point A coincides with the center of the earpiece, however, the earpiece may be located elsewhere on the horizontal line. Also note that the vertical centerline is not necessarily parallel to the front face of the EUT (see Figure A-1), especially for fold EUT's, EUT's with flip pieces, and other irregularly-shaped EUT's.

3. Define a Cartesian coordinate system with the origin at point A, where the positive Z-Axis is along the line from B to A, the positive Y-Axis is along the horizontal line and points to the "right" of the phone face, and the positive X-Axis is orthogonal to the Y-Z plane and points away from the face of the phone. Figure A-2 illustrates this coordinate system definition for three typical case styles of EUT. In all cases, the longitudinal direction of the EUT is the Z-axis, and the right hand rule is used to define the X- and Y-axes.

FIGURE A-1 EUT VERTICAL AND HORIZONTAL REFERENCE LINES

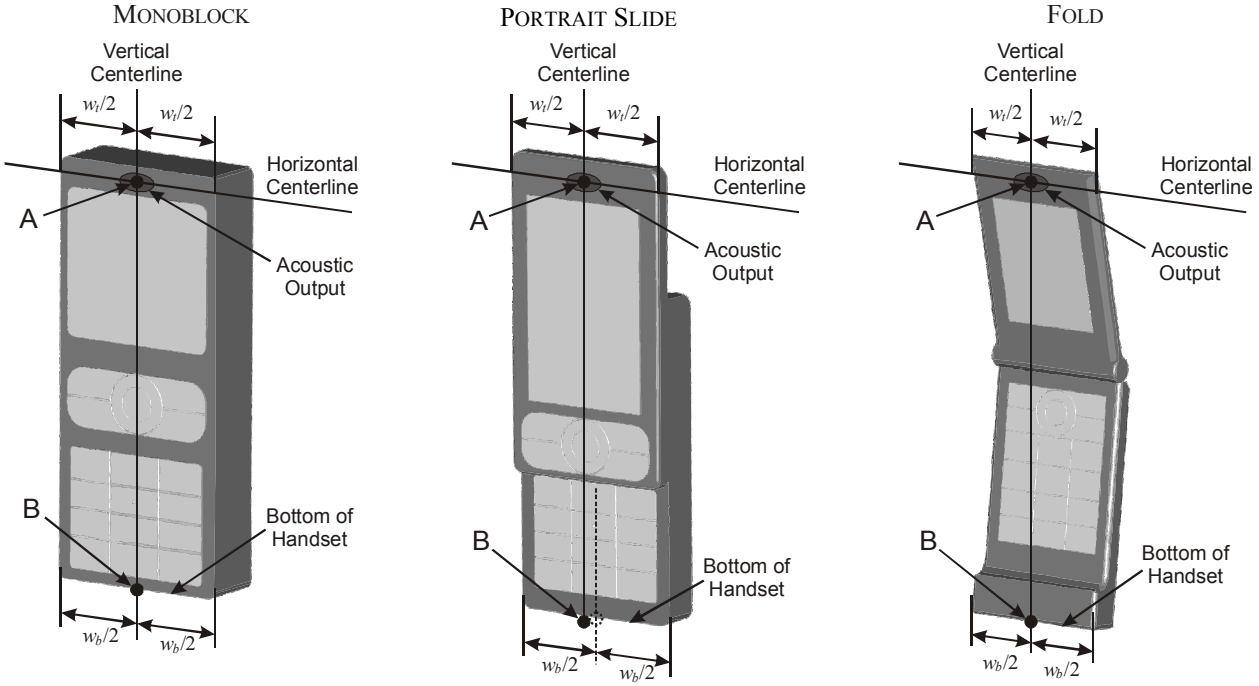

FIGURE A-2 EUT COORDINATE SYSTEM - FREE SPACE

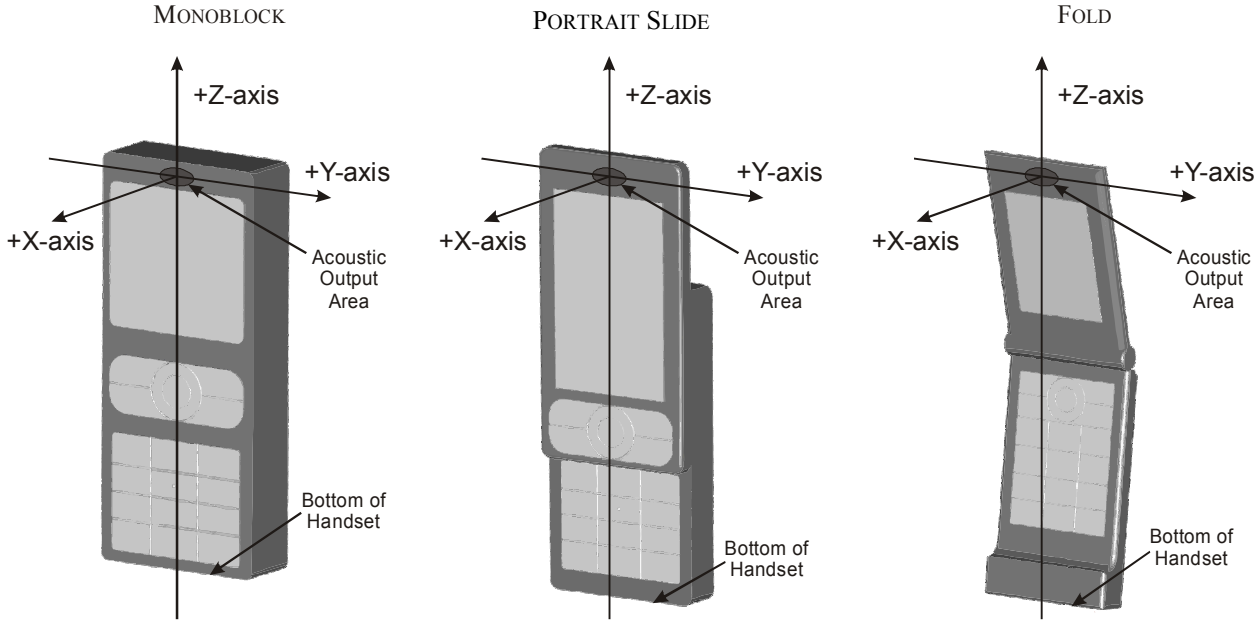

Note that monoblock EUTs are also referred to as candy bar phones. Fold EUTs are also referred to as clam shell phones.

A.1.2 Head Phantom Only

The head phantom only configuration is used to simulate talk position.

The EUT shall be mounted in "cheek" position [2] on the head phantom. This position and its coordinate system are defined as follows:

1. Follow Steps 1 and 2 from Appendix A.1.1.
2. Figure A-3 shows the profile of the SAM head phantom. Indicated are the locations of the right ear (RE) point and the mouth (M). The corresponding left ear point (LE) being on the head phantom's corresponding left side. Position the EUT close to the surface of the SAM head phantom such that point A is on the (virtual) extension of the line passing through points RE and LE on the head phantom (see Figure A-4), and so that the plane defined by the vertical center and the horizontal line of the phone is approximately parallel to the sagittal plane of the head phantom.
3. Translate the EUT towards the head phantom along the line passing through RE and LE until the EUT touches the ear.

4. While maintaining the EUT in this plane, rotate it around the LE-RE line until the vertical centerline is in the plane normal to MB-NF including the line MB (called the reference plane).
5. Rotate the EUT around the vertical centerline until the phone (horizontal line) is symmetrical with respect to the line NF.
6. While maintaining the vertical centerline in the reference plane, keeping point A on the line passing through RE and LE and maintaining the EUT contact with the ear, rotate the EUT about the line NF until any point on the EUT is in contact with a head phantom point below the ear (cheek). See Figure A-4.
7. Define a Cartesian coordinate system with the origin at point A (RE or LE), where the positive Z-Axis is perpendicular to the top of the SAM head phantom, the positive X-Axis pointing away from the face of the phantom, and the positive Y-Axis along the RE-LE line in the LE direction. Figure A-5 illustrates this coordinate system definition both the right and left ears. As an alternative, the origin of the coordinate system may be moved along the Y-Axis while maintaining the orientation of the coordinate system such that the X-Z plane is in the center of the phantom as illustrated in Figure A-6, provided the uncertainty contribution in Appendix G.7.1 is applied.

FIGURE A-3 SAM HEAD PHANTOM WITH MOUTH AND EAR LOCATIONS

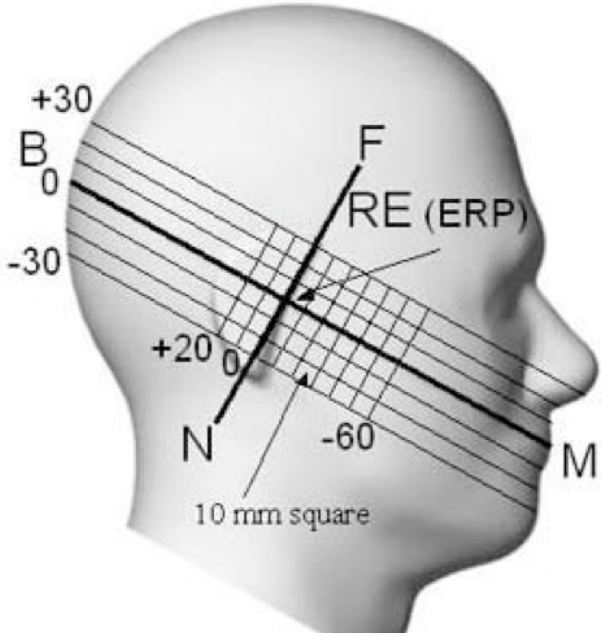

FIGURE A-4 EUT POSITION: "CHEEK" OR "TOUCH" POSITIONS FOR RIGHT EAR

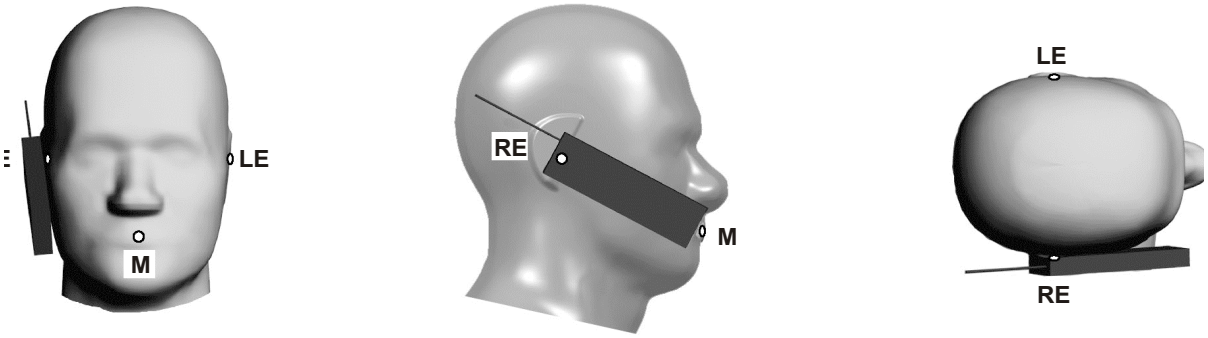

FIGURE A-5 DEFINITION OF COORDINATE SYSTEM FOR SAM HEAD PHANTOM

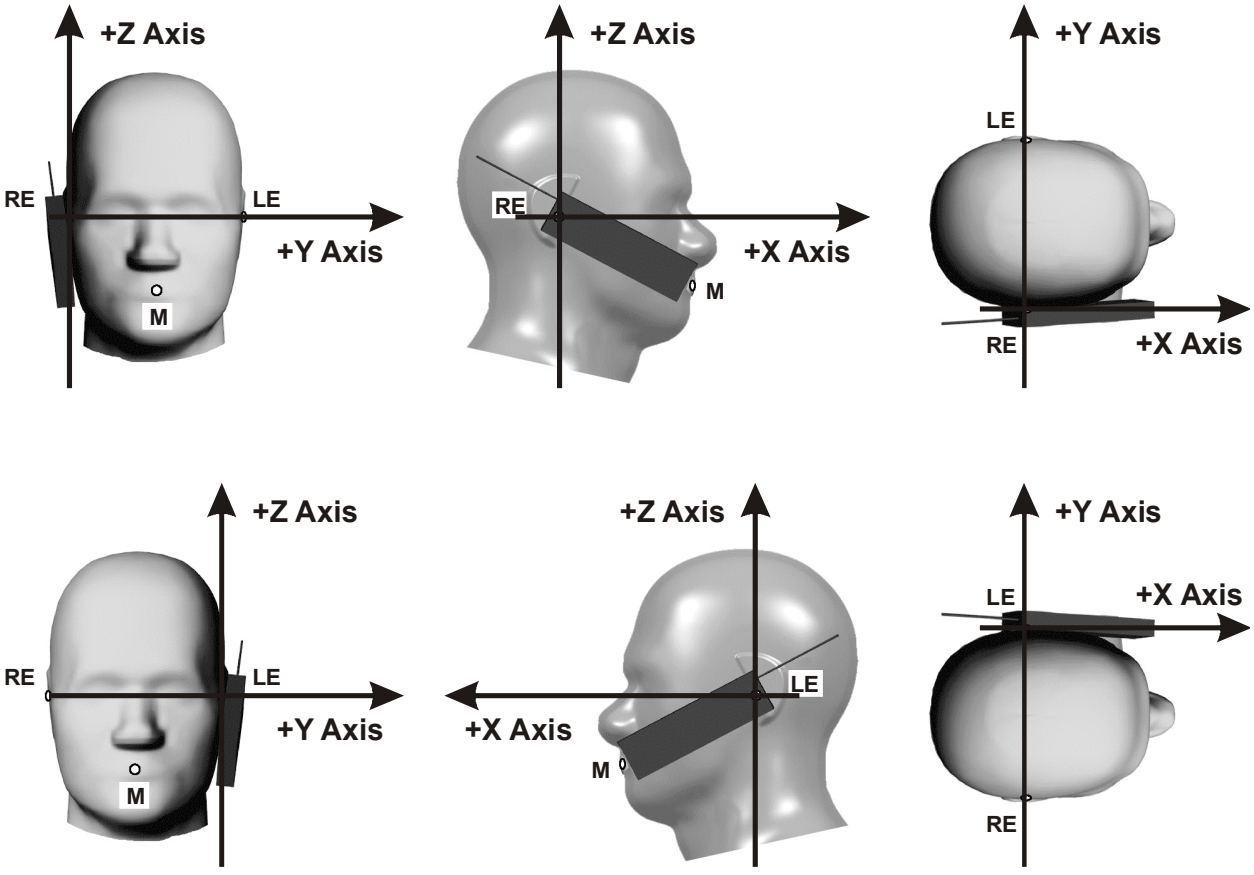

FIGURE A-6 ALTERNATE COORDINATE SYSTEM FOR SAM HEAD PHANTOM

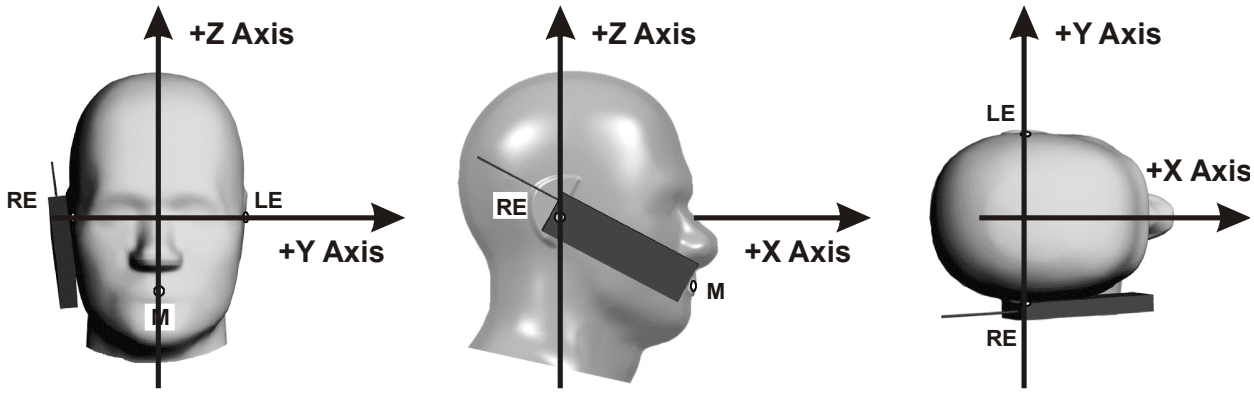

A.1.3 Hand Phantom Selection Process

In order to more accurately represent real-world usage of the EUT, this Test Plan introduces standard hand phantoms for use when testing both "talk" (head-and-hand voice call) and "data" (hand-only, browsing grip) modes. These new test cases using standardized hand phantoms are expected to eventually replace the prior, head-only "talk mode" testing described in Appendix A.1.2.

User studies indicate that the majority of devices will fit into one of eight standard grips (four grips for the right hand and four grips for the left) as shown in Figure A-7. The appropriate hand phantom for a given test is chosen by the device width, its usage mode and its form factor.

If the device width is between 56 mm and 72 mm, then the PDA hand shall be used for data mode and talk position. If the device width is less than 56 mm, then different hand phantoms shall be used for talk position and data mode. Monoblock and fold EUTs less than 56 mm wide shall use the monoblock hand phantom and fold hand phantom, respectively, for talk mode testing against the head phantom. Portrait slide and rotator EUTs less than 56 mm wide shall use the monoblock hand phantom for talk mode testing in the "closed" geometry, and the fold hand phantom for talk mode testing in the "open" geometry. All EUTs less than 56 mm wide shall use the narrow data hand phantom for hand-only, data mode testing.

Devices that do not fit any of the above criteria (e.g., devices wider than 72 mm, devices held in a landscape orientation or with 2 hands) are not required to be tested in this test plan at this time.

The decision tree shown in Figure A-7 is the result of detailed user studies and represents the requirements for CTIA certification. Most devices will fit nicely in to the decision tree. Customers, or carriers, at their option, may ask for additional testing with alternate hand phantoms. In such cases, normal measurement procedures apply, and the resulting

supplemental data can be included in the report. The test report shall clearly identify the supplemental data.

FIGURE A-7 CHOOSING THE CORRECT HAND PHANTOM

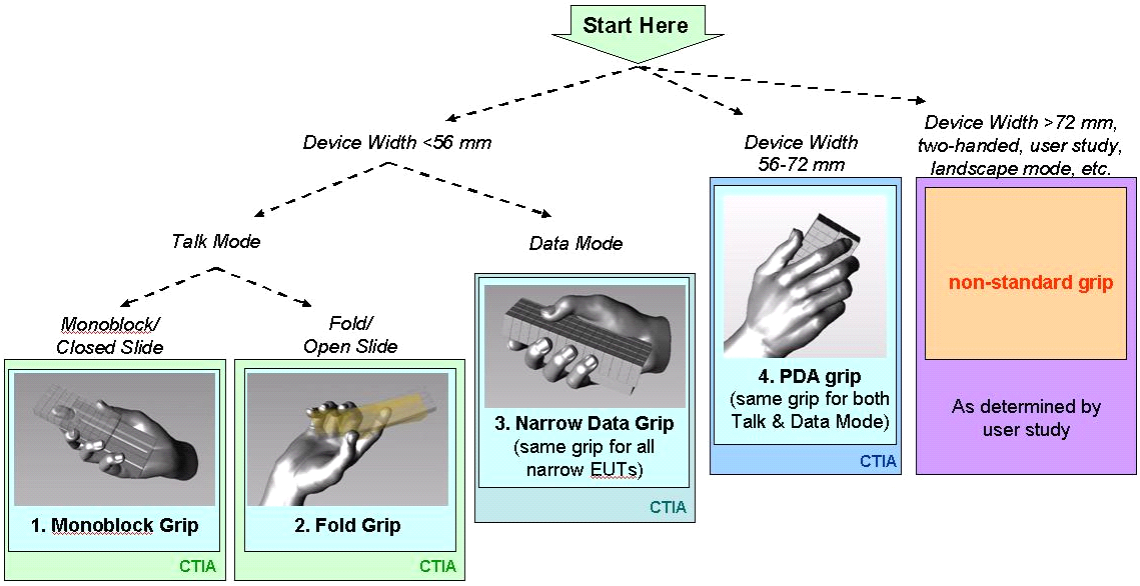

A.1.4 Head and Hand Phantom ("Talk Mode")

The head and hand phantom configuration is used to simulate the same "talk mode" of operation as the head-only configuration of Appendix A.1.2, but is intended to be more realistically representative because it also includes the hand. Additionally, the head and hand "talk mode" configuration specifies that the EUT not be in direct physical contact with the cheek of the head phantom, but rather, tilted away from the cheek by an angle of 6º. This "six degrees from touch position" is based on user studies and is intended to more realistically represent real-world operation of the EUT.

Standard positioning of the EUT in the hand phantom varies with the choice of hand phantom being used. The choice of hand phantom for a given EUT is defined in the preceding Appendix A.1.3. The positioning of the EUT in each type of hand phantom is defined in the subsequent subsections, Appendix A.1.4.1 through A.1.4.3.

Positioning of the combined hand+EUT against the head is analogous to the positioning of the EUT for the head-only configuration of A.1.2, with the exception that the 6º tilt angle from the cheek is used instead of direct contact with the cheek of the head phantom. The same coordinate system and reference points previously defined on the head phantom and EUT are used. The alternate coordinate system shown in Figure A-6 may be used if the additional ripple

test according to Section 3.6 has been performed and the results are included in the uncertainty calculation.

Finding the correct “6º from touch” position against the head phantom may be difficult while the EUT is in the grasp of the hand phantom - in particular, the fingertips of the hand phantom may extend beyond the face of a thin EUT and act as an obstruction. An optional mask spacer is available for the head phantom, to assist with locating and maintaining the EUT in the desired “6º from touch” position. The mask is a 32 mm wide conformal strip, created by sweeping the surface of the head phantom through a 6º rotation about the ear. Direct EUT contact against the mask thus establishes the required 6º spacing away from the head, regardless of EUT form factor. The material for the head phantom mask spacer shall be solid with a dielectric constant of less than 1.3 and a loss tangent of less than 0.003. Material additions around the nose, mouth, or opposite side of the head phantom may help to fix the mask spacer onto the head phantom.

In the situation where the fingertips of the hand phantom obstruct the EUT from touching the mask in the cheek region, then the hand+EUT will be rotated beyond 6º such that the fingertips just touch the head phantom.

FIGURE A-8 OPTIONAL HEAD PHANTOM MASK SPACER ON SAM HEAD PHANTOM

(a) Right-sided positioning of the mask spacer

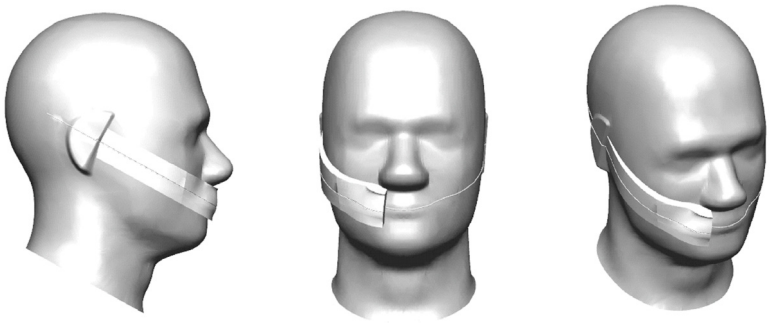

(b) Left-sided positioning of the mask spacer

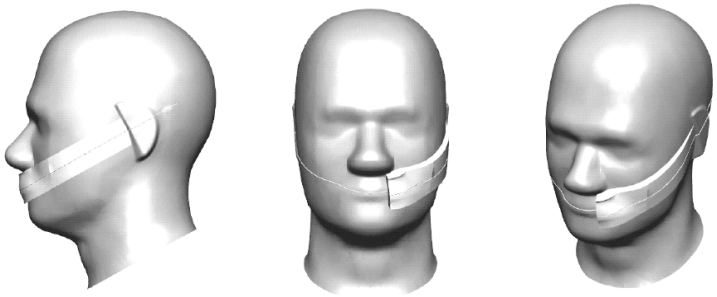

The EUT shall be mounted in a suitable hand phantom and placed in a tilted position (cheek + 6 degrees) on the head phantom.

1. Ready the EUT for operation, if necessary.
2. Mount the EUT onto the palm spacer and place it in the hand phantom, as defined in the appropriate subsequent subsection (A.1.4.1 through A.1.4.3 for the type of hand phantom being used. This subassembly of hand phantom, palm spacer and EUT is now referred to as the "hand+EUT."
3. If the optional 6 degree head phantom mask spacer will be used, then affix it to the head phantom as shown in Figure A-8 utilizing the appropriate right-sided or left-sided configuration.
4. Orient the hand+EUT so that the EUT is facing the head phantom with its vertical (longitudinal) centerline aligned in the reference plane (as indicated by an engraved line passing through the ears and mouth of the head phantom) and its acoustic output oriented toward the ear.
5. If necessary, rotate the hand+EUT around the vertical centerline of the EUT so that its contacting edge at the acoustic output is parallel to the flat plane of the ear on the head phantom. Note that the flat ear surfaces of the head phantom are not vertical but rather tapered slightly inward at the bottom.
6. While keeping the EUT vertical centerline aligned with the reference plane marking on the head phantom, translate the hand+EUT toward the head phantom until the EUT makes a flat, two-point contact with the ear. The horizontal line passing through the acoustic output of the EUT (as defined in A.1.1) should be aligned with the perpendicular NF line marking that crosses through the ear.
7. Rotate the hand+EUT about the ear axis (i.e., the perpendicular NF line) until any third point on the EUT makes physical contact. If the device is thin and the mask spacer is not being used, it may be necessary to bend away the flexible fingers of the hand phantom to allow contact between the head phantom and the EUT without obstruction. If the head phantom mask spacer is used, rotate the hand+EUT about the ear axis (i.e., the perpendicular NF line) until any third point of the hand+EUT makes physical contact with either the head phantom mask spacer or the surface of the head phantom itself.
8. If the mask spacer is not being used, then it is necessary to again rotate the hand+EUT about the ear axis (i.e., the perpendicular NF line) back away from the head phantom by 6 degrees from the three-point touch position. If the fingers of the hand phantom were bent to allow contact between the head phantom and the EUT without obstruction, then they shall be moved back to their proper positions. If it is not possible to reposition the fingers due to interference with the head phantom, then the EUT shall be rotated further away from the head until the fingers, when positioned correctly, just touch the head phantom.

The assembled head and hand configuration is shown in Figure A-9, for an example EUT tested with the monoblock hand phantom and palm spacer in both right-sided and left-sided configurations.

The tolerance on the tilt angle specified in Step 7 or 8 must be within ±2º. The tilt angle tolerance using the mask spacer shall be assessed by the CATL or the tilt angle shall be able to be measured using a scale that is an integral part of the fixturing or with a suitable gauge. The tilt angle r_2 is defined in Figure G-5.

Table G-4 gives an example of the uncertainty assessment for EUT positioning using a value for r_2 (deg) of ±0.5 º. The actual angular uncertainty for r_2 shall be used to calculate the EUT positioning measurement uncertainty.

FIGURE A-9 HEAD AND HAND CONFIGURATION (A) WITH AND (B) WITHOUT MASK SPACER(RIGHT), (C) WITH AND (D) WITHOUT MASK SPACER (LEFT)

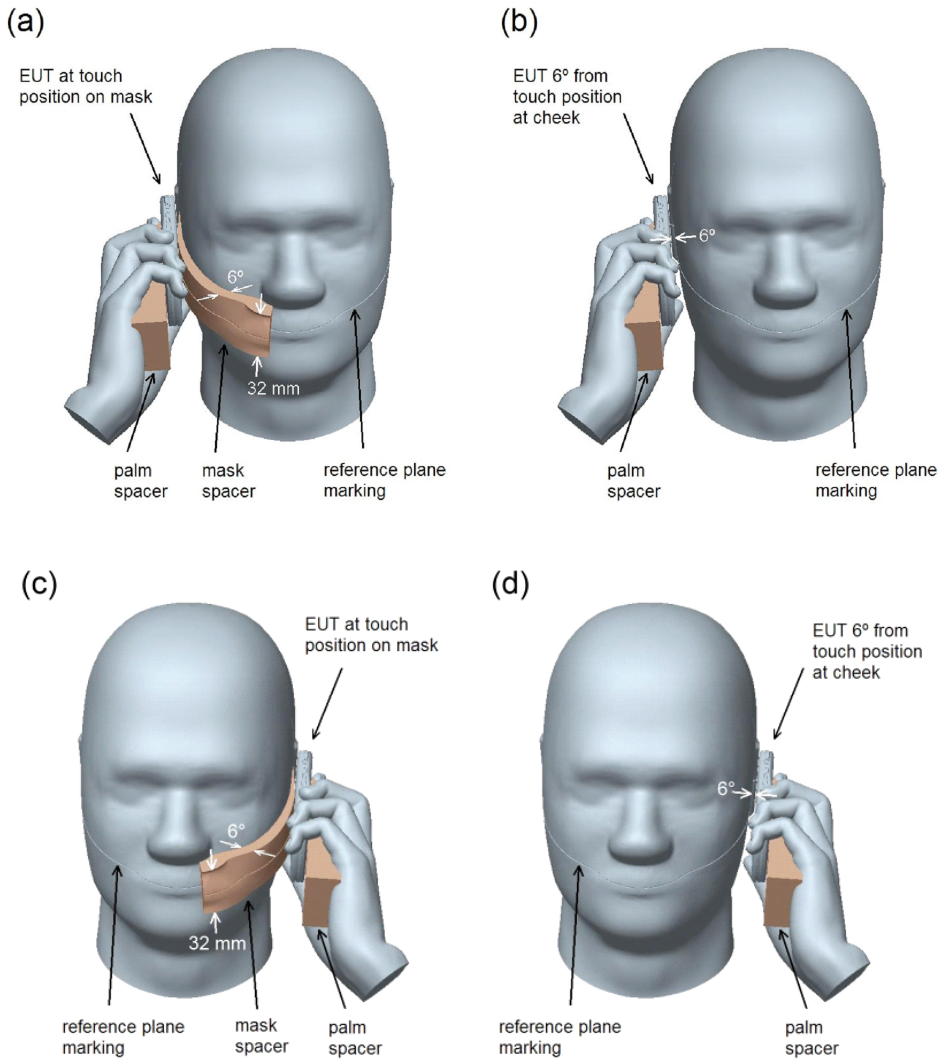

A.1.4.1 Mounting Monoblock EUT in Monoblock Hand Phantom for Talk Mode

This procedure applies to mounting monoblock EUTs, closed portrait slide EUTs and closed rotator EUTs, when the EUT is less than 56 mm wide.

User grip studies indicate that the average grip for this type of EUT has the index finger pressing against the back, the ring finger in contact with the EUT at the bottom, and the pinky finger not touching the EUT. To help maintain a consistent, repeatable positioning that conforms to the grip studies, an alignment tool with evenly spaced rulings is first used to measure the EUT. The EUT is then positioned in accordance with ruled markings on a

conformal palm spacer. Alignment Tool A (see Figure A-10) features a 120º interior corner to help ensure that the ring fingertip lands in the desired position at the bottom of the EUT, regardless of any curvature in the EUT corners. There are two ruled scales: a bottom ruler (measuring down from the 120º corner) and a side ruler (measuring up from the 120º corner). The EUT is placed so as to fit into the 120º corner and is measured from the bottom ruler. EUTs with rounded corners will sit lower in the tool than EUTs having square corners, and thus give a different reading.

1. Place the EUT face-up in Alignment Tool A with its side along the side ruler, and slide it down until it makes contact at the 120º corner as shown in Figure A-10.
2. Measure and record the bottom of the EUT by reading off the bottom ruler of Tool A.
3. Observe the top of the EUT against the side ruler of the tool. If the top of the EUT extends past the 120 mm marking on the side ruler, then the additional length beyond 120 mm shall be added to the reading from Step 2.
4. Position the EUT on the monoblock palm spacer (Figure A-11). The vertical centerlines of the EUT and the palm spacer shall be superposed. The bottom of the EUT shall be lined up with the ruled marking on the palm spacer that corresponds to the reading from the alignment tool, as determined in steps 2 and 3. The EUT may optionally be affixed to the palm spacer with the help of touch fastener material.
5. Position the conformal palm spacer, with EUT, into the grasp of the monoblock hand phantom. Ensure that the index fingertip contacts the back of the EUT and the ring finger contacts the side of the EUT near its bottom.

FIGURE A-10 ALIGNMENT TOOL A

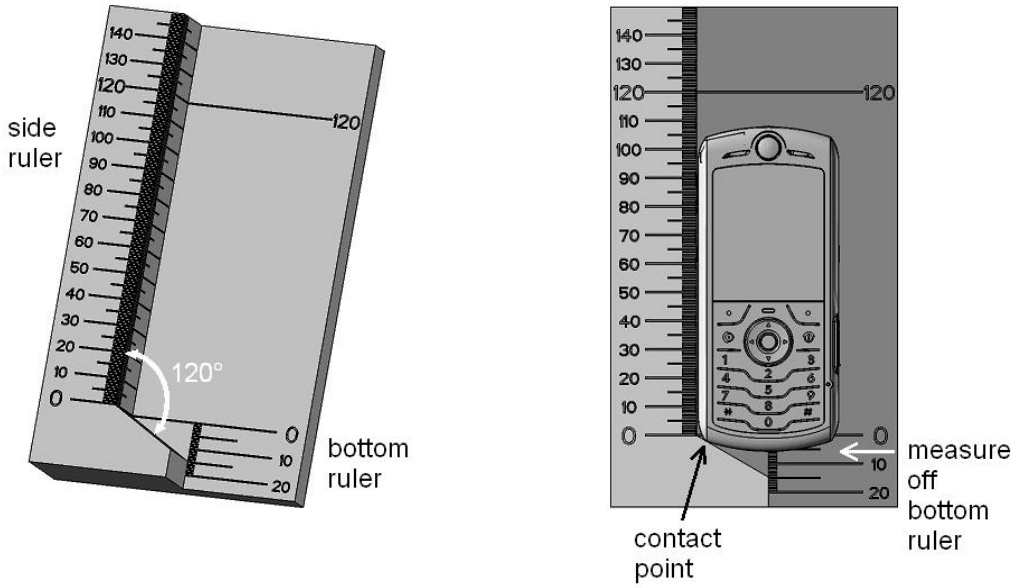

The material for the monoblock palm spacer shall be hollow with a wall thickness less than 2 mm, and a dielectric constant of less than 5.0 and a loss tangent of less than 0.05 or it shall be solid with a dielectric constant of less than 1.3 and a loss tangent of less than 0.003. It may feature an optional groove or cavity to accommodate touch fastener material.

FIGURE A-11 MONOBLOCK PALM SPACER

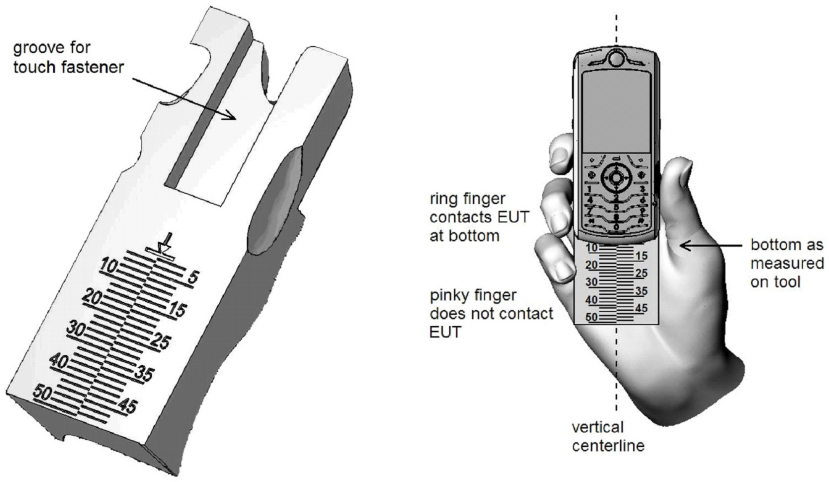

Note: A mirror-image configuration of the palm spacer shall be used for the left-handed monoblock grip.

A.1.4.2 Mounting Fold EUT in Fold Hand Phantom for Talk Mode

This procedure applies to fold and open portrait slide/rotator EUTs when the EUT is less than 56 mm wide.

User grip studies indicate that the average grip for this type of EUT has the index finger pressing against the back of the flip above the hinge, and the thumb and remaining fingers gripping the base below the hinge. To help maintain a consistent, repeatable positioning that conforms to the grip studies, an alignment tool with evenly spaced rulings is first used to measure the EUT. The EUT is then positioned in accordance with ruled markings on a conformal palm spacer. Alignment Tool B (see Figure A-12) features two rounded humps upon which the EUT is suspended. One hump represents the index fingertip of the hand phantom, while the other represents the palm spacer. This design helps ensure that the index finger remains in contact with the flip for any fold EUT geometry, regardless of hinge position or fold angle. The tool also features a line marking along its side wall, for aligning the EUT hinge axis of rotation for consistent positioning. The ruled scale for measuring the bottom of the EUT is split-level in order to minimize parallax discrepancies when measuring EUTs that are suspended above the ruler by their fold angle.

1. Open the EUT and rest it face-up on Alignment Tool B with its hinge suspended between the two humps, as shown in Figure A-12 and Figure A-13. The side of the

EUT shall be aligned against the side wall of the tool. The base of the EUT shall rest on the wide hump with ruled markings, and the flip of the EUT shall rest on the narrow hump.

2. If a fold EUT, then slide the EUT longitudinally so as to align its hinge axis of rotation with the line marking engraved on the side wall of the tool, as closely as possible such that the EUT is not physically lifted off from either hump of the tool (Figure A-12). If an open portrait slide or rotator EUT, then slide the EUT longitudinally until the base part of the EUT touches the narrow hump of the tool (Figure A-13).
3. Measure and record the bottom of the EUT by reading off the bottom ruler of Tool B. Visually align the two halves of the split-level ruler to minimize parallax reading error.
4. Position the conformal fold palm spacer (Figure A-14) in the fold hand phantom corresponding to the right-handed or left-handed configuration.
5. Position the EUT in the Fold Hand Phantom, resting on the index fingertip and palm spacer, with the bottom of the EUT aligned to the ruling on the palm spacer that corresponds to the reading from Step 3. Ensure that all fingertips are in contact with the EUT. Touch fastener material may be used to affix the EUT to the palm spacer.

FIGURE A-12 ALIGNMENT TOOL B AND USAGE WITH FOLD EUT

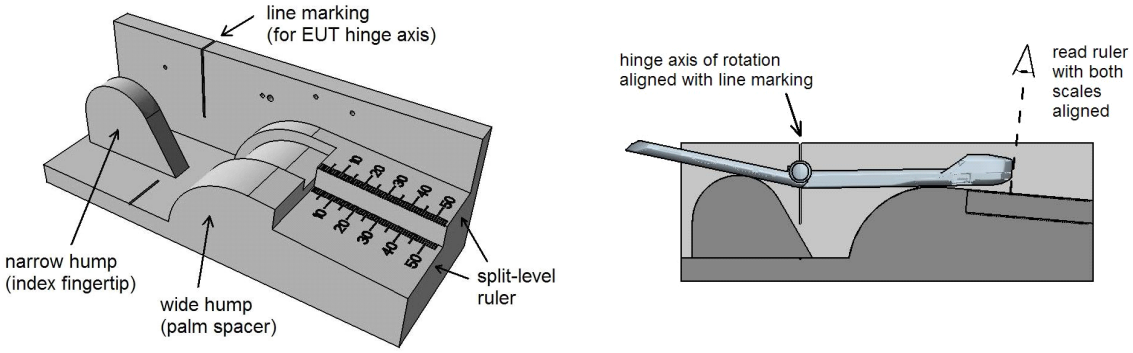

FIGURE A-13 USAGE OF ALIGNMENT TOOL B WITH OPEN PORTRAIT SLIDE EUT

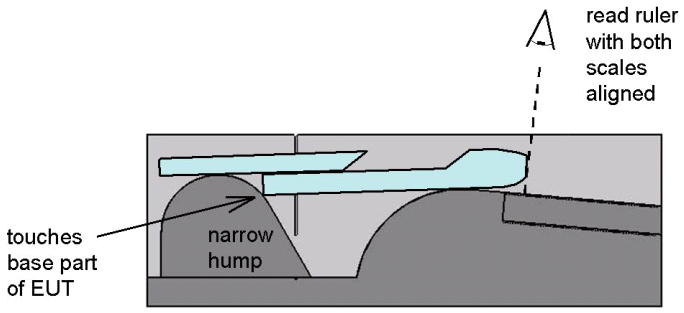

The material for the fold palm spacer shall be hollow with a wall thickness less than 2 mm, and a dielectric constant of less than 5.0 and a loss tangent of less than 0.05 or it shall be solid with a dielectric constant of less than 1.3 and a loss tangent of less than 0.003. It features a split-level ruler to avoid parallax errors, and a groove to accommodate touch fastener material.

FIGURE A-14 FOLD PALM SPACER

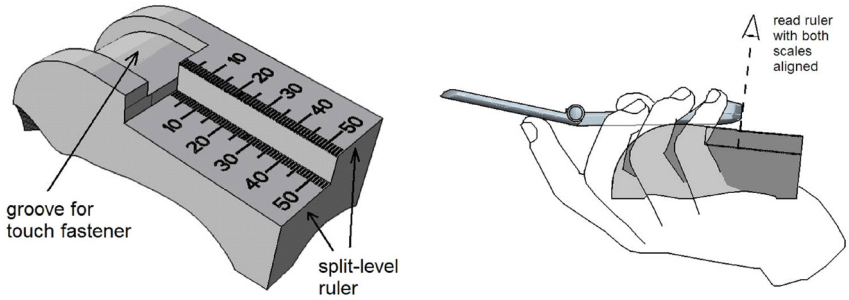

Note: A mirror-image configuration of the palm spacer shall be used for the left-handed fold grip.

A.1.4.3 Mounting Wide EUT in PDA Hand Phantom for Talk Mode

This procedure applies to EUTs 56 to 72 mm wide, for talk position.

User grip studies have shown that the average grip for this type of EUT has the index finger pressing against the back near the top and the thumb at the side. To help achieve a consistent positioning that conforms to the grip studies, the EUT is aligned to the PDA palm spacer (Figure A-15). No alignment tool is required. The PDA spacer features side and bottom walls to help ensure consistent alignment of EUTs of various sizes.

1. Place the EUT on the PDA spacer (see Figure A-15).
2. Align the EUT to the side wall of the PDA (see Figure A-16).

3. If the EUT is shorter than 135 mm, then align the top of the EUT with the top of the PDA spacer as shown in Figure A-16. Otherwise, align the bottom of the EUT with the bottom wall of the PDA spacer.

The material for the PDA palm spacer shall be hollow with a wall thickness less than 2 mm, and a dielectric constant of less than 5.0 and a loss tangent of less than 0.05 or it shall be solid with a dielectric constant of less than 1.3 and a loss tangent of less than 0.003. It may feature a groove or cavity to accommodate touch fastener material.

FIGURE A-15 PDA PALM SPACER

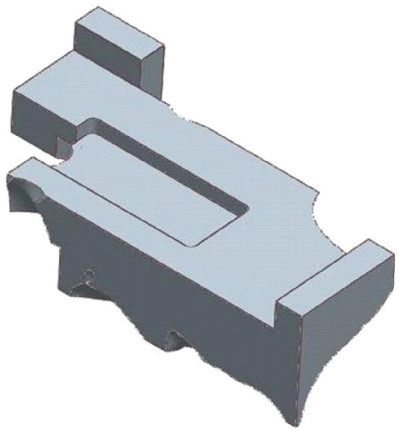

Note: A mirror-image configuration of the palm spacer shall be used for the left-handed grip.

FIGURE A-16 POSITIONING OF WIDE EUT WITH RESPECT TO PDA PALM SPACER

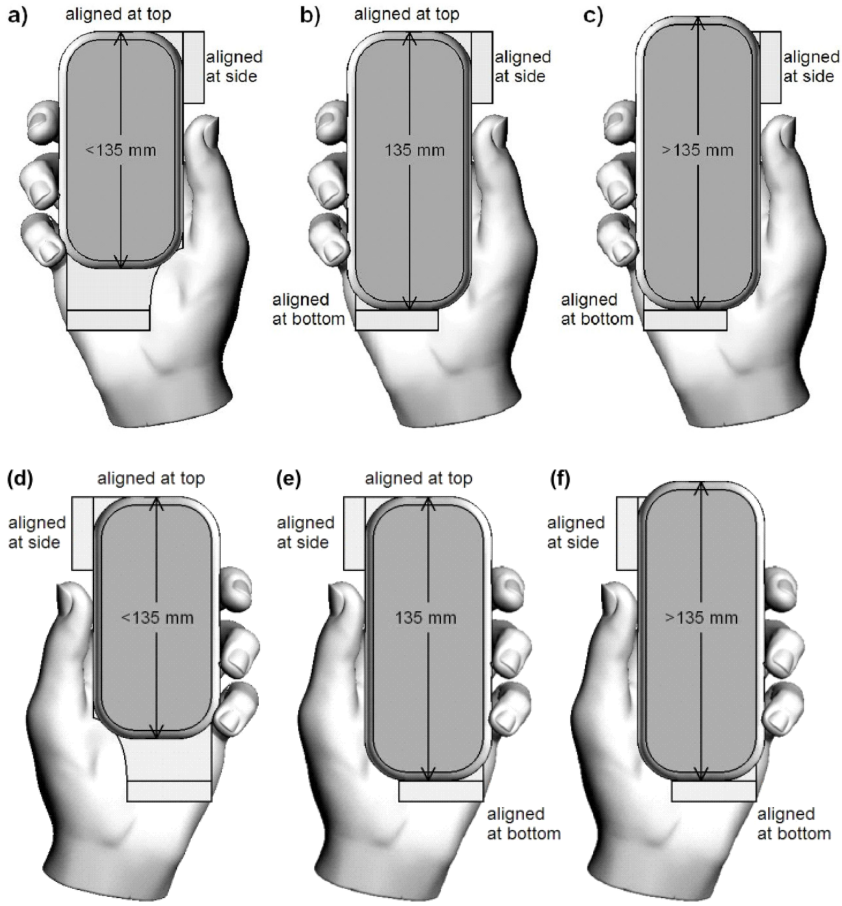

A.1.5 Hand Phantom Only

The hand phantom only configuration is used to simulate data mode (browsing, navigation).

The EUT shall be mounted in a suitable hand phantom and oriented such that the EUT's main display is tilted 45 degrees ± 5 degrees from vertical.

1. Ready the EUT for operation, if necessary. For example, for devices with a cover piece, open the cover.
2. Mount the EUT in the hand (refer to the following subsections)
3. Define a line L that is normal to the plane of the main display and passes through its center. Define a line M that lies within the plane of the main display, intersecting L, and lies parallel to the horizontal axis of the display. See Figure A-17.

4. Define a Cartesian coordinate system with its origin at the L-M intersection, where the positive Y-Axis lies along M pointing to the right of the phone. Define the positive X-Axis to face away from the display at an angle 45 degrees "below" line L and the positive Z-Axis to face away from the display 45 degrees "above" line L, as illustrated in Figure A-18. If necessary, the origin of the coordinate system may be translated from the center of the display to aid in orientation of the hand phantom and EUT combination provided that the EUT remains inside the quiet zone.

FIGURE A-17 EUT DISPLAY ALIGNMENT FEATURES

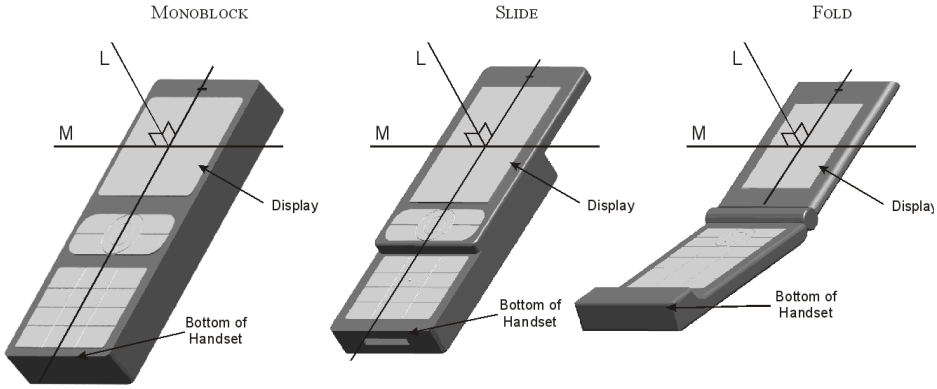

FIGURE A-18 DEFINITION OF COORDINATE SYSTEM FOR EUT WITH HAND PHANTOM IN DATA MODE

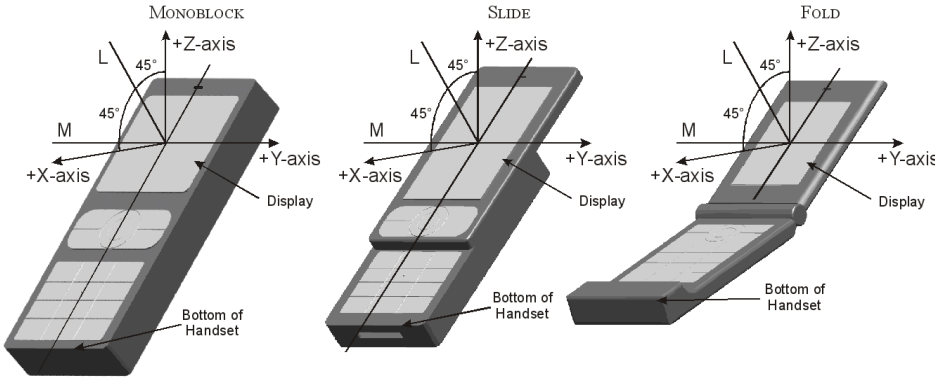

A.1.5.1 Mounting a Narrow EUT in the Narrow Hand Phantom for Data Mode

This hand phantom is suitable for use with all EUTs narrower than 56 mm.

User grip studies have shown that the average grip for narrow EUTs has the index finger supporting the back of the device and the thumb positioned over a central navigation wheel or

"nav key." To help achieve a consistent positioning that conforms to the grip studies, Alignment Tool A (Figure A-19) is first used to measure the distance between the bottom of the EUT and the center of its nav key. The EUT is then positioned in accordance with ruled markings on a conformal palm spacer corresponding to the right or left configuration.

1. Place the EUT on the EUT alignment tool A (as shown in Figure A-19).
2. Record the chin length from the scale at the bottom of the alignment tool.
3. Record the location of the navigation key (or the "2" key, if no navigation key is present) on the side ruler of the EUT alignment tool A. The key's center is used as the reference.
4. Add the two readings from Step 2 and 3 together. If the sum is less than 30 mm, then use 30 mm instead.
5. Place the EUT on the narrow data palm spacer and align the side of the EUT with the side wall of the spacer.
6. The bottom edge of the EUT shall be placed on the narrow data palm spacer at the ruling corresponding to the value obtained in Step 4 (See Figure A-20).
7. Ensure that the index finger is in contact with the back of the EUT. If the device is very narrow and/or thin, it may occur that the middle finger does not curl tightly enough to contact the EUT. In such case, in order to ensure consistent test results, no attempt should be made to force the fingertip to contact the EUT. Touch fastener material may be used to maintain the EUT in the desired position.

The material for the narrow data palm spacer shall be hollow with a wall thickness less than 2 mm, and a dielectric constant of less than 5.0 and a loss tangent of less than 0.05 or it shall be solid with a dielectric constant of less than 1.3 and a loss tangent of less than 0.003. It may feature a groove or cavity to accommodate touch fastener material.

FIGURE A-19 MEASURING A NARROW EUT IN ALIGNMENT TOOL A FOR HAND ONLY ("DATA MODE") TESTING

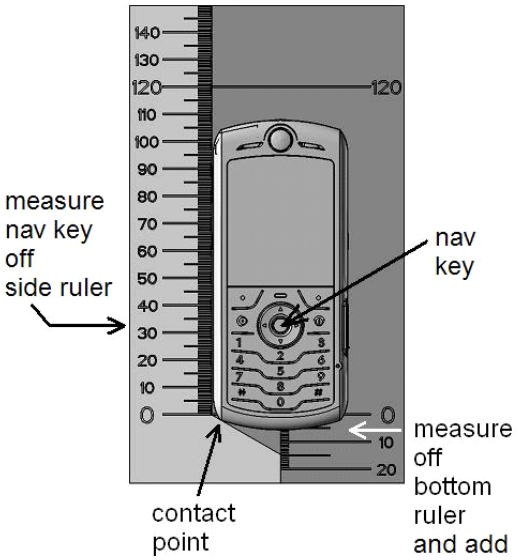

FIGURE A-20 NARROW DATA PALM SPACER

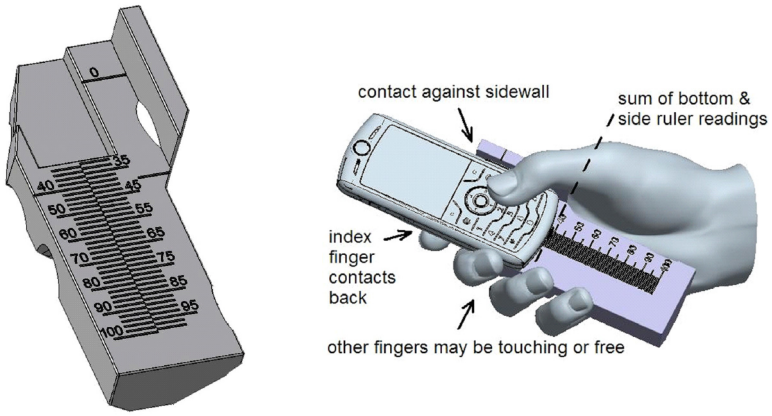

Note: A mirror-image configuration of the palm spacer shall be used for the left-handed narrow data grip.

A.1.5.2 Mounting a Wide EUT in the PDA Phantom for Data Mode

This hand phantom is suitable for use with EUTs of width 56-72 mm. The positioning of the EUT in the PDA hand for data mode is identical to that for talk mode, and is already described in Appendix A.1.4.3.

A.2 Test Systems Set-up

Each of the two referenced chamber setups have different coordinate system orientations. This is due to the difference in implementation of the chamber axes. However, the EUT coordinate systems of the previous sections will apply independent of the physical orientations of the EUT inside the chamber. Figure A-21 below shows the typical setup using a combined axis system. In addition to the pictured Theta axis rotation, the EUT will have to be rotated about the Z-axis (Phi rotation) in order to perform the full spherical scans.

FIGURE A-21 TYPICAL SETUP FOR A COMBINED AXIS SYSTEM

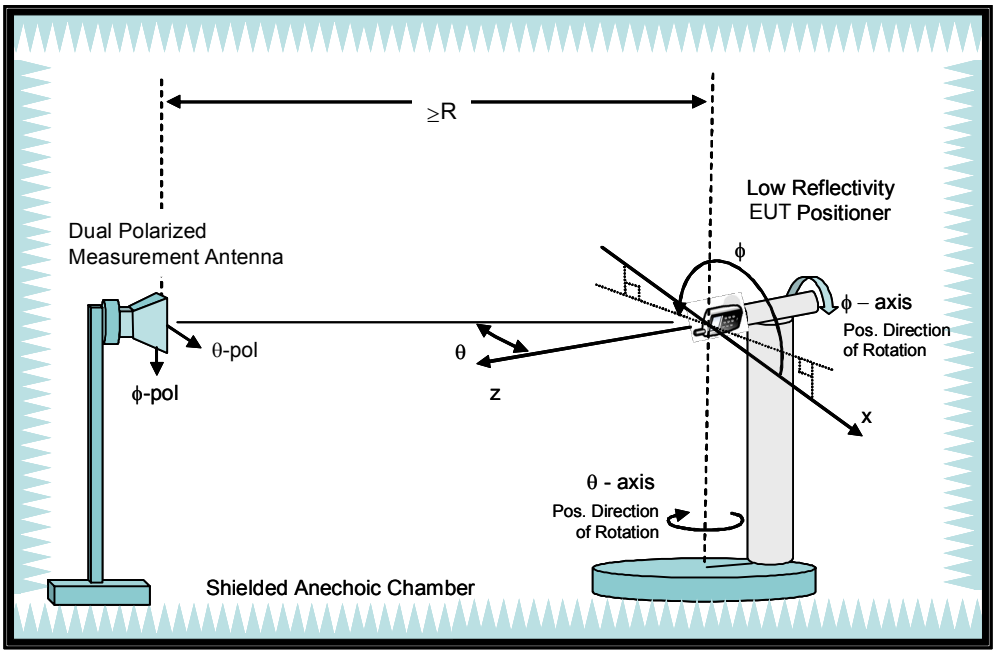

Figure A-22 below shows the typical setup using the distributed axis system. In this configuration, the Phi and Theta angles are traversed separately by the distributed positioners in the chamber.

FIGURE A-22 TYPICAL SETUP FOR A DISTRIBUTED AXIS SYSTEM

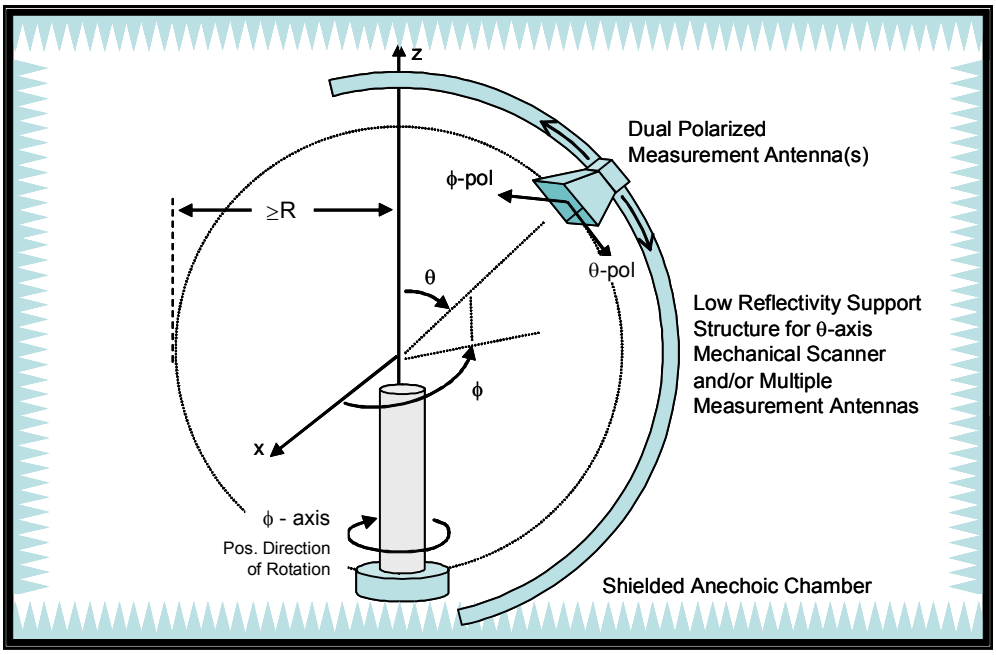

A.3 Test Setup—Instrumentation

Typical system schematics for both TRP and TIS measurements are shown in Figure A-23 to Figure A-29. The shown configurations are only representative examples of common measurement systems and do not represent an exhaustive list of allowable configurations. For more details regarding selection and configuration of measurement instrumentation, see Appendix D.

Figure A-23 through Figure A-29 also include illustrations showing conducted power and conducted sensitivity measurement setups. It is recommended that the conducted measurements be performed inside a shielded environment. For conducted TIS measurements, a shielded environment is required since interferences can directly influence the measurement results. For conducted transmit power tests, a shielded environment is recommended since interference signals may cause dropped calls during the power measurement. The mobile EUT antenna connector is typically a special miniature RF connector on the EUT and is used as a RF-Test-Jack for conducted measurements. If the EUT does not readily support an antenna port for conducted measurements, a separate modified EUT may be provided for all conducted measurements. The mobile manufacture must provide an RF test cable that terminates in a common SMA or N type connector to mate with the EUT antenna connector, along with the associated RF insertion loss for that cable connection. The

insertion loss of the RF-Test-Cable must be factored into measurements referenced to the antenna connector.

FIGURE A-23 SIMPLIFIED BLOCK DIAGRAM SHOWING A COMMON CONFIGURATION FOR THE USE OF A BASE STATION SIMULATOR FOR TRP MEASUREMENTS. THE FORWARD LINK COMMUNICATION IS TRANSMITTED THROUGH THE COMMUNICATION LINK ANTENNA AND THE REVERSE LINK IS RECEIVED THROUGH THE MEASUREMENT ANTENNA. THIS CONFIGURATION SUPPORTS AMPLIFICATION OF BOTH SIGNAL PATHS IF NECESSARY.

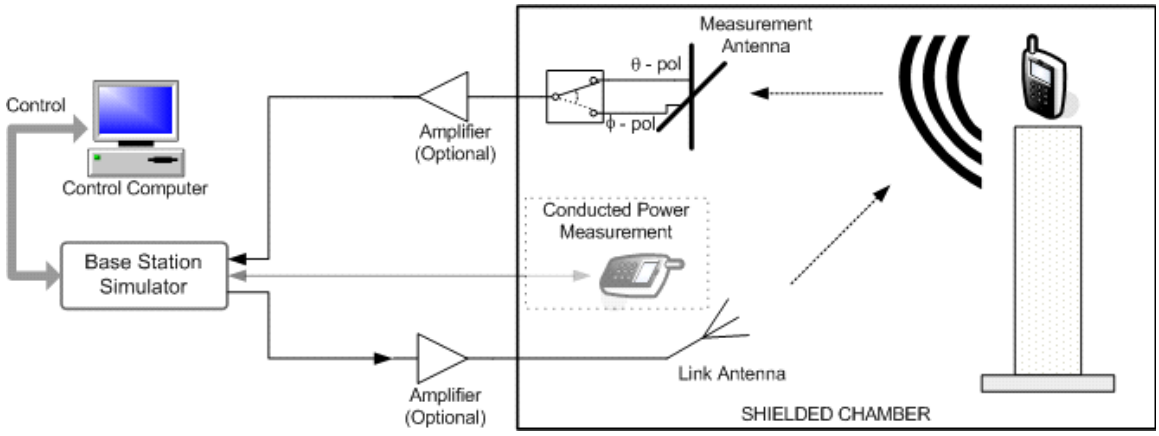

FIGURE A-24 SIMPLIFIED BLOCK DIAGRAM SHOWING A COMMON CONFIGURATION FOR TIS MEASUREMENTS. THE FORWARD LINK COMMUNICATION IS TRANSMITTED THROUGH THE MEASUREMENT ANTENNA AND THE REVERSE LINK IS RECEIVED THROUGH THE COMMUNICATION LINK ANTENNA. THIS CONFIGURATION SUPPORTS AMPLIFICATION OF BOTH SIGNAL PATHS IF NECESSARY.

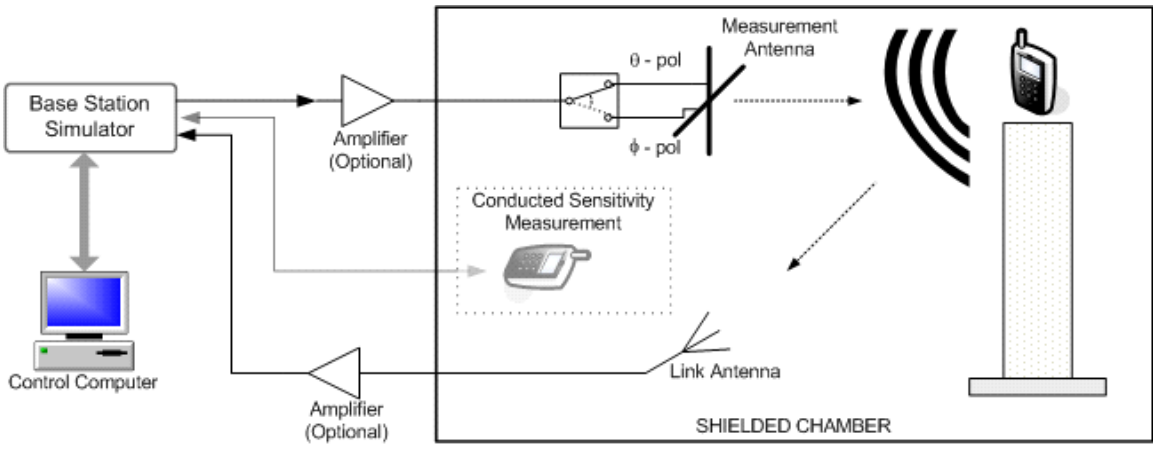

FIGURE A-25 SIMPLIFIED BLOCK DIAGRAM SHOWING A COMMON CONFIGURATION FOR THE USE OF A SPECTRUM ANALYZER POWER METER OR OTHER DEDICATED RECEIVER FOR TRP MEASUREMENTS. BOTH FORWARD AND REVERSE LINK COMMUNICATIONS BETWEEN THE MOBILE AND BASE STATION SIMULATOR ARE CARRIED OUT THROUGH A SEPARATE COMMUNICATION LINK ANTENNA.

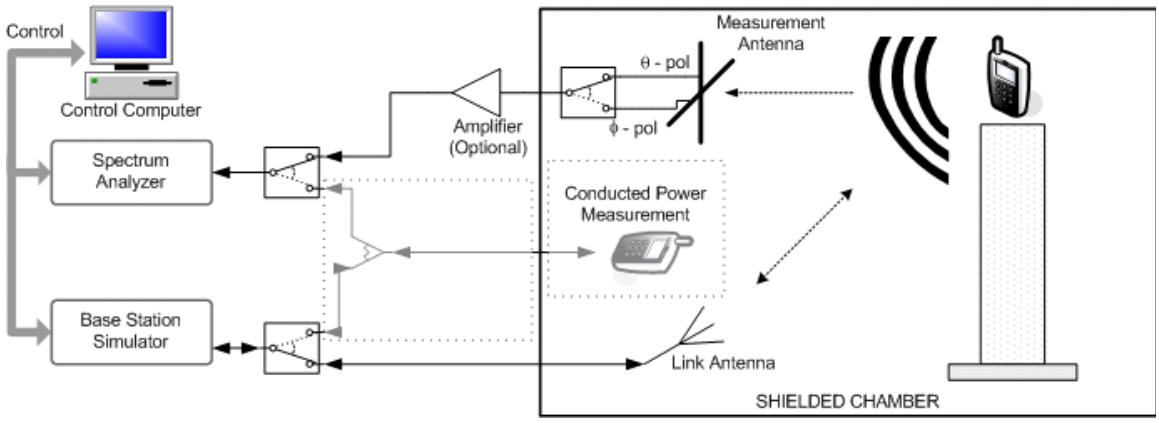

FIGURE A-26 SIMPLIFIED BLOCK DIAGRAM SHOWING A COMMON CONFIGURATION FOR THE USE OF SPECTRUM ANALYZER POWER METER OR OTHER DEDICATED RECEIVER FOR TRP MEASUREMENTS. FORWARD LINK COMMUNICATION BETWEEN THE MOBILE AND BASE STATION SIMULATOR IS CARRIED OUT THROUGH A SEPARATE COMMUNICATION LINK ANTENNA WHILE THE REVERSE LINK IS CARRIED THROUGH THE MEASUREMENT ANTENNA.

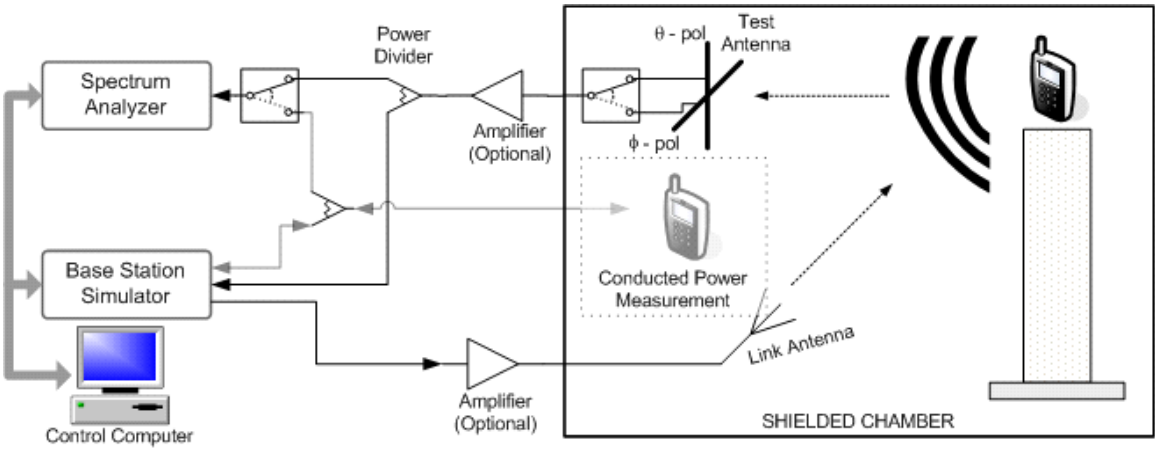

FIGURE A-27 SIMPLIFIED BLOCK DIAGRAM ILLUSTRATING A METHOD OF EXTERNALLY AMPLIFYING BOTH FORWARD AND REVERSE LINK COMMUNICATION SIGNALS AND COMBINING THEM INTO ONE SIGNAL ROUTED TO/FROM ONE (OR MORE) MEASUREMENT ANTENNA(S). THIS CONFIGURATION SUPPORTS BOTH TRP AND TIS MEASUREMENTS

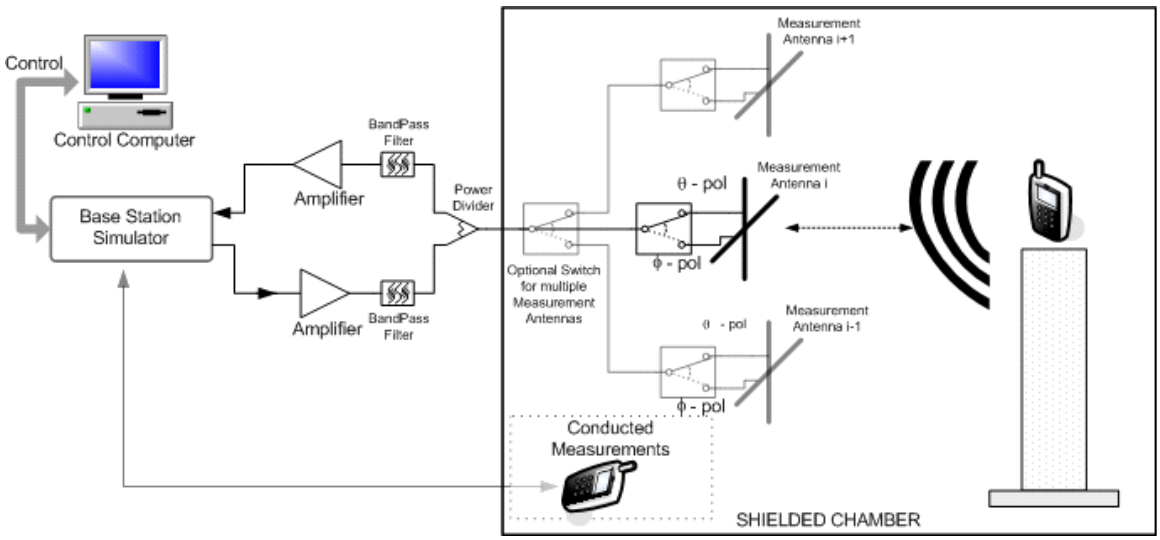

FIGURE A-28 SIMPLIFIED BLOCK DIAGRAM SHOWING A COMMON CONFIGURATION FOR THE USE OF DUAL SPECTRUM ANALYZERS, POWER METERS, OR OTHER DEDICATED RECEIVERS FOR TRP MEASUREMENTS. BOTH FORWARD AND REVERSE LINK COMMUNICATIONS BETWEEN THE MOBILE AND BASE STATION SIMULATOR ARE CARRIED OUT THROUGH A SEPARATE COMMUNICATION LINK ANTENNA

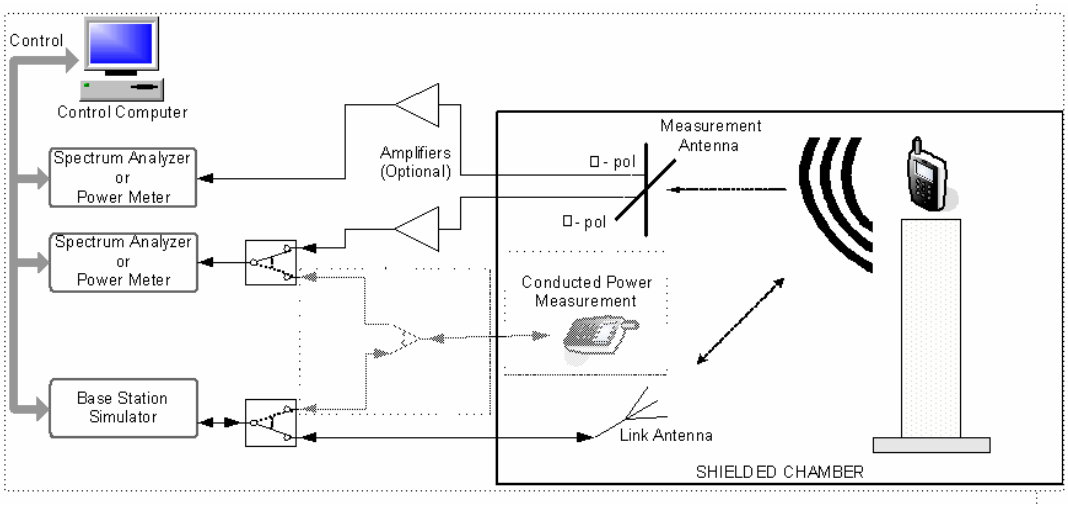

FIGURE A-29 SIMPLIFIED BLOCK DIAGRAM SHOWING A COMMON CONFIGURATION FOR THE USE OF DUAL SPECTRUM ANALYZERS, POWER METERS, OR OTHER DEDICATED RECEIVERS FOR TRP MEASUREMENTS. FORWARD LINK COMMUNICATION BETWEEN THE MOBILE AND BASE STATION SIMULATOR IS CARRIED OUT THROUGH A SEPARATE COMMUNICATION LINK ANTENNA WHILE THE REVERSE LINK IS CARRIED OUT THROUGH THE MEASUREMENT ANTENNA.

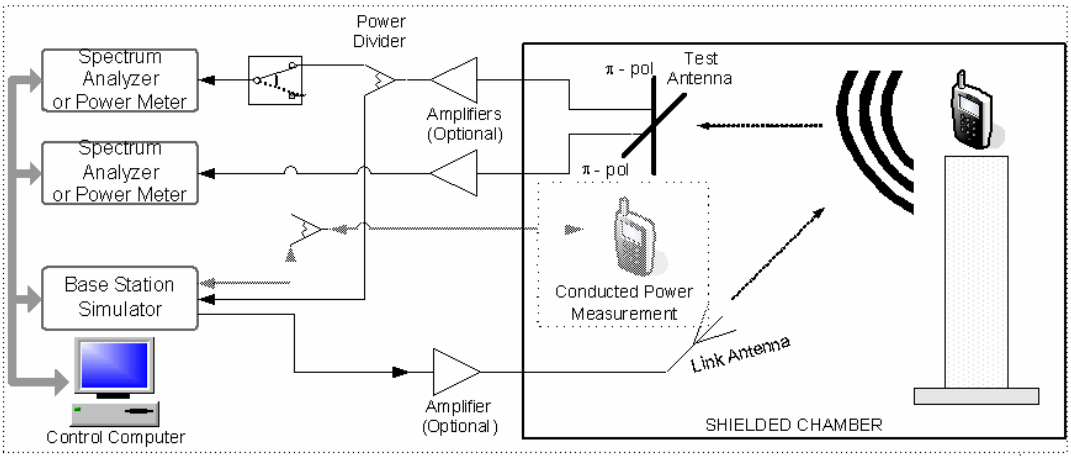

Appendix B Reporting of Test Results (Normative)

Test reports and files shall be provided as described in this section. Deliverables consist of a Range Reference Measurement data file (Section 4) and EUT Measurement data files (as described in this section) for each EUT characterized.

Data from the tests on every product shall be reported in three ways:

1. A complete set of the measurement data for every test supplied electronically in a format that can be easily read (e.g., Excel, etc.)
2. A complete set of test report forms (Table B-1 through Table B-89)
   a. For CDMA devices, only provide Table B-15 to Table B-17 for those bands supporting RX diversity, and only provide Table B-12 to Table B-14 for those bands not supporting RX diversity.
   b. For CDMA 1xEV-DO devices, only provide Table B-24 to Table B-26 for those bands supporting RX diversity, and only provide Table B-21 to Table B-23 for those bands not supporting RX diversity.
   c. For CDMA 1xRTT DATA devices, only provide Table B-33 to Table B-35 for those bands supporting RX diversity, and only provide Table B-30 to Table B-32 for those bands not supporting RX diversity.
   d. For UMTS devices, only provide Table B-54 to Table B-56 for those bands supporting RX diversity, and only provide Table B-51 to Table B-53 for those bands not supporting RX diversity.
   e. For LTE devices, only provide Table B-77 to Table B-85 for those bands supporting RX diversity, and only provide Table B-67 to Table B-76 for those bands not supporting RX diversity.
3. A series of 3D plots based on Table B-7 and Table B-8 of the mid channel patterns and GPS patterns, as applicable, as seen from a representative viewing angle

Please note the following abbreviations in the tables that follow:

FS = Free Space

BH = Beside Head (Head Phantom Only)

BHL = Beside Head Left Side (Head Phantom Only)

BHR = Beside Head Right Side (Head Phantom Only)

HL = Hand Left (Hand Phantom Only)

HR = Hand Right (Hand Phantom Only)

BHHL = Beside Head and Hand Left Side (Head and Hand Phantom)

BHHR = Beside Head and Hand Right Side (Head and Hand Phantom)

The Summation Test Report (Table B-1 through Table B-4) and Summation Test Report Plot Matrix shall be included as a separate file and also be included at the beginning of the main test report submitted. The TIS Summation Test Report shall also contain the Intermediate Channel Relative Sensitivity table (Table B-5 and Table B-6). In addition, any conducted measurements referenced to the antenna connector shall be reported in Table B-3 and Table B-4 for each channel tested.

The results of the calculations for expanded uncertainty for both TRP and TIS measurements shall be reported. The test performance requirements shall not be adjusted by the measurement uncertainty when determining compliance of the EUTs.

The test report shall also note any specific conditions under which the laboratory was granted accreditation for this testing, where these conditions would affect the test results. Such notation shall be included both up-front in the test report and in the test report uncertainty budget section.

TABLE B-1 EQUIPMENT UNDER TEST (EUT) INFORMATION

Manufacturer	
Model	
Serial Number(s)/ESN(s)/IMEI(s)	
FCC ID Number	
Hardware Version	
Software Version	
Configuration of Primary Mechanical Mode	

TABLE B-2 EUTS USED FOR EACH TEST

Serial Number/ ESN/IMEI	CATL/ Chamber used	Cellular Radio Mode(s)	Band(s)	Test Type(s)	Test Condition(s)

TABLE B-3 CELLULAR OTA SUMMATION TEST REPORT

Band	Channel	Frequency (MHz)	Conducted Power / Conducted Sensitivity (dBm)	TRP / TIS (dBm)[1]					NHPRP ±45 / NHPIS ±45 (dBm)					NHPRP ±30 / NHPIS ±30 (dBm)				
				FS	HL	HR	BHHL	BHHR	FS	HL	HR	BHHL	BHHR	FS	HL	HR	BHHL	BHHR
Note 1: Values that do not pass shall be marked in red font.																		

TABLE B-4 GPS SUMMATION TEST REPORT

Cellular Band	Cellular TX Channel	Cellular Frequency (MHz)	GPS Conducted Sensitivity (dBm)	Positioning Method	TIS (dBm)				UHIS (dBm)				PIGS (dBm)			
					BHHL	BHHR	HL	HR	BHHL	BHHR	HL	HR	BHHL	BHHR	HL	HR
CDMA 800	384	836.52		MS-assisted												
CDMA 1900	600	1880														
CDMA 2100/1700	450	1732.5														
GSM 850	190	836.6		UE-based												
GSM 1900	661	1880														
UMTS 850	4183	836.6														
UMTS 1900	9400	1880														
UMTS 2100/1700	1413	1732.6														
LTE Band 12	23095	707.5														
LTE Band 17	23790	710														
LTE Band 13[1]	23230	782														
LTE Band 13[2]	23230	782														
LTE Band 14	23330	793														
LTE Band 26	26865	831.5														
LTE Band 5	20525	836.5														
LTE Band 4	20175	1732.5														
LTE Band 2	18900	1880														
LTE Band 25	26365	1882.41														
LTE Band 41	40620	2593														

TABLE B-4 GPS SUMMATION TEST REPORT

Cellular Band	Cellular TX Channel	Cellular Frequency (MHz)	GPS Conducted Sensitivity (dBm)	Positioning Method	TIS (dBm)				UHIS (dBm)				PIGS (dBm)			
					BHHL	BHHR	HL	HR	BHHL	BHHR	HL	HR	BHHL	BHHR	HL	HR
GSM 850	190	836.6		UE-assisted												
GSM 1900	661	1880														
UMTS 850	4183	836.6														
UMTS 1900	9400	1880														
UMTS 2100/1700	1413	1732.6														
LTE Band 12	23095	707.5														
LTE Band 17	23790	710														
LTE Band 13[1]	23230	782														
LTE Band 13[2]	23230	782														
LTE Band 14	23330	793														
LTE Band 26	26865	831.5														
LTE Band 5	20525	836.5														
LTE Band 4	20175	1732.5														
LTE Band 2	18900	1880														
LTE Band 25	26365	1882.41														
LTE Band 41	40620	2593														

Note 1: Uplink allocation of 1 RB
Note 2: Uplink allocation of 12 RBs

TABLE B-5 INTERMEDIATE CHANNEL RELATIVE SENSITIVITY

Band	Intermediate Channel	FS	BHHR
		Pass/Fail	Pass/Fail
		Pass/Fail	Pass/Fail
		Pass/Fail	Pass/Fail
		Pass/Fail	Pass/Fail
		Pass/Fail	Pass/Fail
		Pass/Fail	Pass/Fail

TABLE B-6 GPS INTERMEDIATE CHANNEL RELATIVE SENSITIVITY

Cellular Band	BHHR			HR		
	Worst Case Channel (and RB allocation)	Intermediate Channel Degradation (dB)	Pass / Fail / Information	Worst Case Channel	Intermediate Channel Degradation (dB)	Pass / Fail / Information
CDMA 800			P / F / I			P / F / I
CDMA 1900			P / F / I			P / F / I
CDMA 2100/1700			P / F / I			P / F / I
GSM 850			P / F / I			P / F / I
GSM 1900			P / F / I			P / F / I
UMTS 850			P / F / I			P / F / I
UMTS 1900			P / F / I			P / F / I
UMTS 2100/1700			P / F / I			P / F / I
LTE Band 12			P / F / I			P / F / I
LTE Band 17			P / F / I			P / F / I
LTE Band 13			P / F / I			P / F / I
LTE Band 14			P / F / I			P / F / I
LTE Band 26			P / F / I			P / F / I
LTE Band 5			P / F / I			P / F / I
LTE Band 4			P / F / I			P / F / I
LTE Band 2			P / F / I			P / F / I
LTE Band 25			P / F / I			P / F / I
LTE Band 41			P / F / I			P / F / I

P = Pass
F = Fail
I = Information Only

TABLE B-7 SUMMATION TEST REPORT PLOT MATRIX

Band	FS		BHHL and BHHR		HL and HR	
	TRP	TIS	TRP	TIS	TRP	TIS
800 or 850[1]	Antenna Up/Down	Antenna Up/Down	Antenna Up/Down	Antenna Up/Down	Antenna Up/Down	Antenna Up/Down
1900[1]	Antenna Up/Down	Antenna Up/Down	Antenna Up/Down	Antenna Up/Down	Antenna Up/Down	Antenna Up/Down
2100/1700[1]	Antenna Up/Down	Antenna Up/Down	Antenna Up/Down	Antenna Up/Down	Antenna Up/Down	Antenna Up/Down
3GPP Band 12[1]	Antenna Up/Down	Antenna Up/Down	Antenna Up/Down	Antenna Up/Down	Antenna Up/Down	Antenna Up/Down
3GPP Band 17[1]	Antenna Up/Down	Antenna Up/Down	Antenna Up/Down	Antenna Up/Down	Antenna Up/Down	Antenna Up/Down
3GPP Band 13[1]	Antenna Up/Down	Antenna Up/Down	Antenna Up/Down	Antenna Up/Down	Antenna Up/Down	Antenna Up/Down
3GPP Band 14[1]	Antenna Up/Down	Antenna Up/Down	Antenna Up/Down	Antenna Up/Down	Antenna Up/Down	Antenna Up/Down
3GPP Band 25[1]	Antenna Up/Down	Antenna Up/Down	Antenna Up/Down	Antenna Up/Down	Antenna Up/Down	Antenna Up/Down
3GPP Band 26[1]	Antenna Up/Down	Antenna Up/Down	Antenna Up/Down	Antenna Up/Down	Antenna Up/Down	Antenna Up/Down
3GPP Band 41[1]	Antenna Up/Down	Antenna Up/Down	Antenna Up/Down	Antenna Up/Down	Antenna Up/Down	Antenna Up/Down
Note 1: Only one mechanical mode per band is required to be plotted (CDMA, 1xEV-DO, 1xRTT, GSM, GPRS, EGPRS, UMTS or LTE). Note the mechanical mode in the test report.						

TABLE B-8 GPS SUMMATION TEST REPORT PLOT MATRIX

Band	BHHL and BHHR	HL and HR
	TIS	TIS
800 or 850[1]	Antenna Up/Down	Antenna Up/Down
1900[1]	Antenna Up/Down	Antenna Up/Down
2100/1700[1]	Antenna Up/Down	Antenna Up/Down
3GPP Band 12[1]	Antenna Up/Down	Antenna Up/Down
3GPP Band 17[1]	Antenna Up/Down	Antenna Up/Down
3GPP Band 13[1]	Antenna Up/Down	Antenna Up/Down
3GPP Band 14[1]	Antenna Up/Down	Antenna Up/Down
3GPP Band 25[1]	Antenna Up/Down	Antenna Up/Down
3GPP Band 26[1]	Antenna Up/Down	Antenna Up/Down
3GPP Band 41[1]	Antenna Up/Down	Antenna Up/Down
Note 1: Only one cellular mode (CDMA, GSM, UMTS, LTE) and one band (800, 850, 1900, 2100/1700, 3GPP Band 12, 3GGP Band 13, 3GPP Band 17, 3GPP Band 14, 3GPP Band 25, 3GPP Band 26, 3GPP Band 41) is required to be plotted. Note the cellular mode and band in the test report. Antenna Up/Down refers to the cellular antenna.		

TABLE B-9 CDMA 800 MINIMUM TRP LEVEL REQUIREMENTS FOR THE PRIMARY MECHANICAL MODE[1]

Reference OTA Test Plan Table 5-5																				
Device Held Up to Head for Voice (Yes/No)	Antenna Type	Device Power Class	Channel	TX Frequency (MHz)	FS			HL			HR			BHHL			BHHR		
					Limit (dBm)	Test Results (dBm)	Pass / Fail / Info	Limit (dBm)	Test Results (dBm)	Pass / Fail / Info	Limit (dBm)	Test Results (dBm)	Pass / Fail / Info	Limit (dBm)	Test Results (dBm)	Pass / Fail / Info	Limit (dBm)	Test Results (dBm)	Pass / Fail / Info
Yes[2]	Embedded	I	1013	824.70	25			TBD			TBD			TBD			TBD		
			384	836.52															
			777	848.31															
		II	1013	824.70	22			TBD			TBD			TBD			TBD		
			384	836.52															
			777	848.31															
		III	1013	824.70	18			TBD			TBD			TBD			TBD		
			384	836.52															
			777	848.31															
	Stub or Retractable	I	1013	824.70	27			TBD			TBD			TBD			TBD		
			384	836.52															
			777	848.31															
		II	1013	824.70	24			TBD			TBD			TBD			TBD		
			384	836.52															
			777	848.31															
		III	1013	824.70	20			TBD			TBD			TBD			TBD		
			384	836.52															
			777	848.31															

TABLE B-9 CDMA 800 MINIMUM TRP LEVEL REQUIREMENTS FOR THE PRIMARY MECHANICAL MODE[1]

Reference OTA Test Plan Table 5-5																				
Device Held Up to Head for Voice (Yes/No)	Antenna Type	Device Power Class	Channel	TX Frequency (MHz)	FS			HL			HR			BHHL			BHHR		
					Limit (dBm)	Test Results (dBm)	Pass / Fail / Info	Limit (dBm)	Test Results (dBm)	Pass / Fail / Info	Limit (dBm)	Test Results (dBm)	Pass / Fail / Info	Limit (dBm)	Test Results (dBm)	Pass / Fail / Info	Limit (dBm)	Test Results (dBm)	Pass / Fail / Info
No[3]	All	I	1013	824.70	27			N/A			N/A			N/A			N/A		
			384	836.52															
			777	848.31															
		II	1013	824.70	24			N/A			N/A			N/A			N/A		
			384	836.52															
			777	848.31															
		III	1013	824.70	20			N/A			N/A			N/A			N/A		
			384	836.52															
			777	848.31															

Note 1: Primary Mechanical Mode refers to device configured in preferred mode per manufacturer instructions (typically means antenna extended, fold or portrait slide open, but depends on form factor).

Note 2: "Yes" applies if the device supports voice operation in the talking position against the head in any cellular radio mode.

Note 3: "No" would be applicable to data-centric devices that are not held up against the head, e.g., embedded laptop solutions.

TABLE B-10 CDMA 1900 MINIMUM TRP LEVEL REQUIREMENTS FOR THE PRIMARY MECHANICAL MODE[1]

Reference OTA Test Plan Table 5-5																				
					FS			HL			HR			BHHL			BHHR		
Device Held Up to Head for Voice (Yes/No)	Antenna Type	Device Power Class	Channel	TX Frequency (MHz)	Limit (dBm)	Test Results (dBm)	Pass / Fail / Info	Limit (dBm)	Test Results (dBm)	Pass / Fail / Info	Limit (dBm)	Test Results (dBm)	Pass / Fail / Info	Limit (dBm)	Test Results (dBm)	Pass / Fail / Info	Limit (dBm)	Test Results (dBm)	Pass / Fail / Info
Yes[2]	Embedded	I	25	1851.25	23			TBD			TBD			TBD			TBD		
			600	1880.00															
			1175	1908.75															
		II	25	1851.25	18			TBD			TBD			TBD			TBD		
			600	1880.00															
			1175	1908.75															
		III	25	1851.25	13			TBD			TBD			TBD			TBD		
			600	1880.00															
			1175	1908.75															
		IV	25	1851.25	8			TBD			TBD			TBD			TBD		
			600	1880.00															
			1175	1908.75															
		V	25	1851.25	3			TBD			TBD			TBD			TBD		
			600	1880.00															
			1175	1908.75															
	Stub or Retractable	I	25	1851.25	25			TBD			TBD			TBD			TBD		
			600	1880.00															
			1175	1908.75															
		II	25	1851.25	20			TBD			TBD			TBD			TBD		
			600	1880.00															
			1175	1908.75															
		III	25	1851.25	15			TBD			TBD			TBD			TBD		
			600	1880.00															
			1175	1908.75															
		IV	25	1851.25	10			TBD			TBD			TBD			TBD		
			600	1880.00															
			1175	1908.75															
		V	25	1851.25	5			TBD			TBD			TBD			TBD		
			600	1880.00															
			1175	1908.75															

TABLE B-10 CDMA 1900 MINIMUM TRP LEVEL REQUIREMENTS FOR THE PRIMARY MECHANICAL MODE[1]

Reference OTA Test Plan Table 5-5																				
Device Held Up to Head for Voice (Yes/No)	Antenna Type	Device Power Class	Channel	TX Frequency (MHz)	FS			HL			HR			BHHL			BHHR		
					Limit (dBm)	Test Results (dBm)	Pass / Fail / Info	Limit (dBm)	Test Results (dBm)	Pass / Fail / Info	Limit (dBm)	Test Results (dBm)	Pass / Fail / Info	Limit (dBm)	Test Results (dBm)	Pass / Fail / Info	Limit (dBm)	Test Results (dBm)	Pass / Fail / Info
No[3]	All	I	25	1851.25	25			N/A			N/A			N/A			N/A		
			600	1880.00															
			1175	1908.75															
		II	25	1851.25	20			N/A			N/A			N/A			N/A		
			600	1880.00															
			1175	1908.75															
		III	25	1851.25	15			N/A			N/A			N/A			N/A		
			600	1880.00															
			1175	1908.75															
		IV	25	1851.25	10			N/A			N/A			N/A			N/A		
			600	1880.00															
			1175	1908.75															
		V	25	1851.25	5			N/A			N/A			N/A			N/A		
			600	1880.00															
			1175	1908.75															

Note 1: Primary Mechanical Mode refers to device configured in preferred mode per manufacturer instructions (typically means antenna extended, fold or portrait slide open, but depends on form factor).

Note 2: "Yes" applies if the device supports voice operation in the talking position against the head in any cellular radio mode.

Note 3: "No" would be applicable to data-centric devices that are not held up against the head, e.g., embedded laptop solutions.

TABLE B-11 CDMA 2100/1700 MINIMUM TRP LEVEL REQUIREMENTS FOR THE PRIMARY MECHANICAL MODE[1]

Reference OTA Test Plan Table 5-5																				
					FS			HL			HR			BHHL			BHHR		
Device Held Up to Head for Voice (Yes/No)	Antenna Type	Device Power Class	Channel	TX Frequency (MHz)	Limit (dBm)	Test Results (dBm)	Pass / Fail / Info	Limit (dBm)	Test Results (dBm)	Pass / Fail / Info	Limit (dBm)	Test Results (dBm)	Pass / Fail / Info	Limit (dBm)	Test Results (dBm)	Pass / Fail / Info	Limit (dBm)	Test Results (dBm)	Pass / Fail / Info
Yes[2]	Embedded	I	25	1711.25	22			TBD			TBD			TBD			TBD		
			450	1732.50															
			875	1753.75															
		II	25	1711.25	17			TBD			TBD			TBD			TBD		
			450	1732.50															
			875	1753.75															
		III	25	1711.25	12			TBD			TBD			TBD			TBD		
			450	1732.50															
			875	1753.75															
		IV	25	1711.25	7			TBD			TBD			TBD			TBD		
			450	1732.50															
			875	1753.75															
		V	25	1711.25	2			TBD			TBD			TBD			TBD		
			450	1732.50															
			875	1753.75															
	Stub or Retractable	I	25	1711.25	22			TBD			TBD			TBD			TBD		
			450	1732.50															
			875	1753.75															
		II	25	1711.25	17			TBD			TBD			TBD			TBD		
			450	1732.50															
			875	1753.75															
		III	25	1711.25	12			TBD			TBD			TBD			TBD		
			450	1732.50															
			875	1753.75															
		IV	25	1711.25	7			TBD			TBD			TBD			TBD		
			450	1732.50															
			875	1753.75															
		V	25	1711.25	2			TBD			TBD			TBD			TBD		
			450	1732.50															
			875	1753.75															

TABLE B-11 CDMA 2100/1700 MINIMUM TRP LEVEL REQUIREMENTS FOR THE PRIMARY MECHANICAL MODE[1]

Reference OTA Test Plan Table 5-5																				
Device Held Up to Head for Voice (Yes/No)	Antenna Type	Device Power Class	Channel	TX Frequency (MHz)	FS			HL			HR			BHHL			BHHR		
					Limit (dBm)	Test Results (dBm)	Pass / Fail / Info	Limit (dBm)	Test Results (dBm)	Pass / Fail / Info	Limit (dBm)	Test Results (dBm)	Pass / Fail / Info	Limit (dBm)	Test Results (dBm)	Pass / Fail / Info	Limit (dBm)	Test Results (dBm)	Pass / Fail / Info
No[3]	All	I	25	1711.25	22			N/A			N/A			N/A			N/A		
			450	1732.50															
			875	1753.75															
		II	25	1711.25	17			N/A			N/A			N/A			N/A		
			450	1732.50															
			875	1753.75															
		III	25	1711.25	12			N/A			N/A			N/A			N/A		
			450	1732.50															
			875	1753.75															
		IV	25	1711.25	7			N/A			N/A			N/A			N/A		
			450	1732.50															
			875	1753.75															
		V	25	1711.25	2			N/A			N/A			N/A			N/A		
			450	1732.50															
			875	1753.75															

Note 1: Primary Mechanical Mode refers to device configured in preferred mode per manufacturer instructions (typically means antenna extended, fold or portrait slide open, but depends on form factor).

Note 2: "Yes" applies if the device supports voice operation in the talking position against the head in any cellular radio mode.

Note 3: "No" would be applicable to data-centric devices that are not held up against the head, e.g., embedded laptop solutions.

TABLE B-12 CDMA 800 MAXIMUM TIS LEVEL REQUIREMENTS FOR THE PRIMARY MECHANICAL MODE[1]

Reference OTA Test Plan Table 6-1																				
Device Held Up to Head for Voice (Yes/No)	Antenna Type	Channel	RX Frequency (MHz)	FS			HL			HR			BHHL			BHHR		
				Limit (dBm)	Test Results (dBm)	Pass / Fail / Info	Limit (dBm)	Test Results (dBm)	Pass / Fail / Info	Limit (dBm)	Test Results (dBm)	Pass / Fail / Info	Limit (dBm)	Test Results (dBm)	Pass / Fail / Info	Limit (dBm)	Test Results (dBm)	Pass / Fail / Info
Yes[2]	Embedded	1013	869.70	-101			TBD			TBD			TBD			TBD		
		384	881.52															
		777	893.31															
	Stub or Retractable	1013	869.70	-101			TBD			TBD			TBD			TBD		
		384	881.52															
		777	893.31															
No[3]	All	1013	869.70	-101			N/A			N/A			N/A			N/A		
		384	881.52															
		777	893.31															

Note 1: Primary Mechanical Mode refers to device configured in preferred mode per manufacturer instructions (typically means antenna extended, fold or portrait slide open, but depends on form factor).

Note 2: “Yes” applies if the device supports voice operation in the talking position against the head in any cellular radio mode.

Note 3: “No” would be applicable to data-centric devices that are not held up against the head, e.g., embedded laptop solutions.

TABLE B-13 CDMA 1900 MAXIMUM TIS LEVEL REQUIREMENTS FOR THE PRIMARY MECHANICAL MODE[1]

Reference OTA Test Plan Table 6-1																			
Device Held Up to Head for Voice (Yes/No)	Antenna Type	Channel	RX Frequency (MHz)	FS			HL			HR			BHHL			BHHR		
				Limit (dBm)	Test Results (dBm)	Pass / Fail / Info	Limit (dBm)	Test Results (dBm)	Pass / Fail / Info	Limit (dBm)	Test Results (dBm)	Pass / Fail / Info	Limit (dBm)	Test Results (dBm)	Pass / Fail / Info	Limit (dBm)	Test Results (dBm)	Pass / Fail / Info
Yes[2]	Embedded	25	1931.25	-101			TBD			TBD			TBD			TBD		
		600	1960.00															
		1175	1988.75															
	Stub or Retractable	25	1931.25	-101			TBD			TBD			TBD			TBD		
		600	1960.00															
		1175	1988.75															
No[3]	All	25	1931.25	-101			N/A			N/A			N/A			N/A		
		600	1960.00															
		1175	1988.75															

Note 1: Primary Mechanical Mode refers to device configured in preferred mode per manufacturer instructions (typically means antenna extended, fold or portrait slide open, but depends on form factor).

Note 2: “Yes” applies if the device supports voice operation in the talking position against the head in any cellular radio mode.

Note 3: “No” would be applicable to data-centric devices that are not held up against the head, e.g., embedded laptop solutions.

TABLE B-14 CDMA 2100/1700 MAXIMUM TIS LEVEL REQUIREMENTS FOR THE PRIMARY MECHANICAL MODE[1]

Reference OTA Test Plan Table 6-1																			
				FS			HL			HR			BHHL			BHHR			
Device Held Up to Head for Voice (Yes/No)	Antenna Type	Channel	RX Frequency (MHz)	Limit (dBm)	Test Results (dBm)	Pass / Fail / Info	Limit (dBm)	Test Results (dBm)	Pass / Fail / Info	Limit (dBm)	Test Results (dBm)	Pass / Fail / Info	Limit (dBm)	Test Results (dBm)	Pass / Fail / Info	Limit (dBm)	Test Results (dBm)	Pass / Fail / Info	
Yes[2]	Embedded	25	2111.25	-101			TBD			TBD			TBD			TBD			
		450	2132.50																
		875	2153.75																
	Stub or Retractable	25	2111.25	-101			TBD			TBD			TBD			TBD			
		450	2132.50																
		875	2153.75																
No[3]	All	25	2111.25	-101			N/A			N/A			N/A			N/A			
		450	2132.50																
		875	2153.75																

Note 1: Primary Mechanical Mode refers to device configured in preferred mode per manufacturer instructions (typically means antenna extended, fold or portrait slide open, but depends on form factor).

Note 2: “Yes” applies if the device supports voice operation in the talking position against the head in any cellular radio mode.

Note 3: “No” would be applicable to data-centric devices that are not held up against the head, e.g., embedded laptop solutions.

TABLE B-15 CDMA 800 MAXIMUM TIS AND BPD LEVEL REQUIREMENTS FOR THE PRIMARY MECHANICAL MODE[1]

Reference OTA Test Plan Table 6-1 and Table 6-11											
Device Held Up to Head for Voice (Yes/ No)	**Test Position**	**Channel**	**RX Frequency (MHz)**	**Primary antenna ("a"/"b")**	**Primary TIS (dBm)**	**Primary TIS Limit (dBm)**	**Pass / Fail / Info**	**Secondary TIS (dBm)**	**BPD (dB)**	**BPD Limit (dB)**	**Pass / Fail / Info**
Yes[2]	FS	1013	869.7			-101				TBD	
		384	881.52			-101				TBD	
		777	893.31			-101				TBD	
	HL	1013	869.7			TBD				TBD	
		384	881.52			TBD				TBD	
		777	893.31			TBD				TBD	
	HR	1013	869.7			TBD				TBD	
		384	881.52			TBD				TBD	
		777	893.31			TBD				TBD	
	BHHL	1013	869.7			TBD				TBD	
		384	881.52			TBD				TBD	
		777	893.31			TBD				TBD	
	BHHR	1013	869.7			TBD				TBD	
		384	881.52			TBD				TBD	
		777	893.31			TBD				TBD	
No[3]	FS	1013	869.7			-101				TBD	
		384	881.52			-101				TBD	
		777	893.31			-101				TBD	
Is antenna "a" dynamically activated (yes/no)?											
Is antenna "b" dynamically activated (yes/no)?											
Transmit antenna location ("a"/"b"/"other"):											

Note 1: Primary Mechanical Mode refers to device configured in preferred mode per manufacturer instructions (typically means antenna extended, fold or portrait slide open, but depends on form factor).

Note 2: "Yes" applies if the device supports voice operation in the talking position against the head in any cellular radio mode.

Note 3: "No" would be applicable to data-centric devices that are not held up against the head, e.g., embedded laptop solutions.

TABLE B-16 CDMA 1900 MAXIMUM TIS AND BPD LEVEL REQUIREMENTS FOR THE PRIMARY MECHANICAL MODE[1]

Reference OTA Test Plan Table 6-1 and Table 6-11											
Device Held Up to Head for Voice (Yes/ No)	**Test Position**	**Channel**	**RX Frequency (MHz)**	**Primary antenna ("a"/"b")**	**Primary TIS (dBm)**	**Primary TIS Limit (dBm)**	**Pass / Fail / Info**	**Secondary TIS (dBm)**	**BPD (dB)**	**BPD Limit (dB)**	**Pass / Fail / Info**
Yes[2]	FS	25	1931.25			-101				TBD	
		600	1960			-101				TBD	
		1175	1988.75			-101				TBD	
	HL	25	1931.25			TBD				TBD	
		600	1960			TBD				TBD	
		1175	1988.75			TBD				TBD	
	HR	25	1931.25			TBD				TBD	
		600	1960			TBD				TBD	
		1175	1988.75			TBD				TBD	
	BHHL	25	1931.25			TBD				TBD	
		600	1960			TBD				TBD	
		1175	1988.75			TBD				TBD	
	BHHR	25	1931.25			TBD				TBD	
		600	1960			TBD				TBD	
		1175	1988.75			TBD				TBD	
No[3]	FS	25	1931.25			-101				TBD	
		600	1960			-101				TBD	
		1175	1988.75			-101				TBD	
Is antenna "a" dynamically activated (yes/no)?											
Is antenna "b" dynamically activated (yes/no)?											
Transmit antenna location ("a"/"b"/"other"):											

Note 1: Primary Mechanical Mode refers to device configured in preferred mode per manufacturer instructions (typically means antenna extended, fold or portrait slide open, but depends on form factor).

Note 2: "Yes" applies if the device supports voice operation in the talking position against the head in any cellular radio mode.

Note 3: "No" would be applicable to data-centric devices that are not held up against the head, e.g., embedded laptop solutions.

TABLE B-17 CDMA 2100/1700 MAXIMUM TIS AND BPD LEVEL REQUIREMENTS FOR THE PRIMARY MECHANICAL MODE[1]

Reference OTA Test Plan Table 6-1 and Table 6-11											
Device Held Up to Head for Voice (Yes/ No)	**Test Position**	**Channel**	**RX Frequency (MHz)**	**Primary antenna ("a"/"b")**	**Primary TIS (dBm)**	**Primary TIS Limit (dBm)**	**Pass / Fail / Info**	**Secondary TIS (dBm)**	**BPD (dB)**	**BPD Limit (dB)**	**Pass / Fail / Info**
Yes[2]	FS	25	2111.25			-101				TBD	
		450	2132.5			-101				TBD	
		875	2153.75			-101				TBD	
	HL	25	2111.25			TBD				TBD	
		450	2132.5			TBD				TBD	
		875	2153.75			TBD				TBD	
	HR	25	2111.25			TBD				TBD	
		450	2132.5			TBD				TBD	
		875	2153.75			TBD				TBD	
	BHHL	25	2111.25			TBD				TBD	
		450	2132.5			TBD				TBD	
		875	2153.75			TBD				TBD	
	BHHR	25	2111.25			TBD				TBD	
		450	2132.5			TBD				TBD	
		875	2153.75			TBD				TBD	
No[3]	FS	25	2111.25			-101				TBD	
		450	2132.5			-101				TBD	
		875	2153.75			-101				TBD	
Is antenna "a" dynamically activated (yes/no)?											
Is antenna "b" dynamically activated (yes/no)?											
Transmit antenna location ("a"/"b"/"other"):											

Note 1: Primary Mechanical Mode refers to device configured in preferred mode per manufacturer instructions (typically means antenna extended, fold or portrait slide open, but depends on form factor).

Note 2: "Yes" applies if the device supports voice operation in the talking position against the head in any cellular radio mode.

Note 3: "No" would be applicable to data-centric devices that are not held up against the head, e.g., embedded laptop solutions.

TABLE B-18 CDMA 1XEV-DO DATA 800 MINIMUM TRP LEVEL REQUIREMENTS FOR THE PRIMARY MECHANICAL MODE[1]

Reference OTA Test Plan Table 5-25																				
Device Held Up to Head for Voice (Yes/No)	Antenna Type	Device Power Class	Channel	TX Frequency (MHz)	FS			HL			HR			BHHL			BHHR		
					Limit (dBm)	Test Results (dBm)	Pass / Fail / Info	Limit (dBm)	Test Results (dBm)	Pass / Fail / Info	Limit (dBm)	Test Results (dBm)	Pass / Fail / Info	Limit (dBm)	Test Results (dBm)	Pass / Fail / Info	Limit (dBm)	Test Results (dBm)	Pass / Fail / Info
Yes[2]	Embedded	I	1013	824.70	25			TBD			TBD			TBD			TBD		
			384	836.52															
			777	848.31															
		II	1013	824.70	22			TBD			TBD			TBD			TBD		
			384	836.52															
			777	848.31															
		III	1013	824.70	18			TBD			TBD			TBD			TBD		
			384	836.52															
			777	848.31															
	Stub or Retractable	I	1013	824.70	27			TBD			TBD			TBD			TBD		
			384	836.52															
			777	848.31															
		II	1013	824.70	24			TBD			TBD			TBD			TBD		
			384	836.52															
			777	848.31															
		III	1013	824.70	20			TBD			TBD			TBD			TBD		
			384	836.52															
			777	848.31															

TABLE B-18 CDMA 1XEV-DO DATA 800 MINIMUM TRP LEVEL REQUIREMENTS FOR THE PRIMARY MECHANICAL MODE[1]

Reference OTA Test Plan Table 5-25																				
Device Held Up to Head for Voice (Yes/No)	Antenna Type	Device Power Class	Channel	TX Frequency (MHz)	FS			HL			HR			BHHL			BHHR		
					Limit (dBm)	Test Results (dBm)	Pass / Fail / Info	Limit (dBm)	Test Results (dBm)	Pass / Fail / Info	Limit (dBm)	Test Results (dBm)	Pass / Fail / Info	Limit (dBm)	Test Results (dBm)	Pass / Fail / Info	Limit (dBm)	Test Results (dBm)	Pass / Fail / Info
No[3]	All	I	1013	824.70	27			N/A			N/A			N/A			N/A		
			384	836.52															
			777	848.31															
		II	1013	824.70	24			N/A			N/A			N/A			N/A		
			384	836.52															
			777	848.31															
		III	1013	824.70	20			N/A			N/A			N/A			N/A		
			384	836.52															
			777	848.31															

Note 1: Primary Mechanical Mode refers to device configured in preferred mode per manufacturer instructions (typically means antenna extended, fold or portrait slide open, but depends on form factor).

Note 2: "Yes" applies if the device supports voice operation in the talking position against the head in any cellular radio mode.

Note 3: "No" would be applicable to data-centric devices that are not held up against the head, e.g., embedded laptop solutions.

TABLE B-19 CDMA 1XEV-DO DATA 1900 MINIMUM TRP LEVEL REQUIREMENTS FOR THE PRIMARY MECHANICAL MODE[1]

Reference OTA Test Plan Table 5-25																				
Device Held Up to Head for Voice (Yes/No)	Antenna Type	Device Power Class	Channel	TX Frequency (MHz)	FS			HL			HR			BHHL			BHHR		
					Limit (dBm)	Test Results (dBm)	Pass / Fail / Info	Limit (dBm)	Test Results (dBm)	Pass / Fail / Info	Limit (dBm)	Test Results (dBm)	Pass / Fail / Info	Limit (dBm)	Test Results (dBm)	Pass / Fail / Info	Limit (dBm)	Test Results (dBm)	Pass / Fail / Info
Yes[2]	Embedded	I	25	1851.25	23			TBD			TBD			TBD			TBD		
			600	1880.00															
			1175	1908.75															
		II	25	1851.25	18			TBD			TBD			TBD			TBD		
			600	1880.00															
			1175	1908.75															
		III	25	1851.25	13			TBD			TBD			TBD			TBD		
			600	1880.00															
			1175	1908.75															
		IV	25	1851.25	8			TBD			TBD			TBD			TBD		
			600	1880.00															
			1175	1908.75															
		V	25	1851.25	3			TBD			TBD			TBD			TBD		
			600	1880.00															
			1175	1908.75															
	Stub or Retractable	I	25	1851.25	25			TBD			TBD			TBD			TBD		
			600	1880.00															
			1175	1908.75															
		II	25	1851.25	20			TBD			TBD			TBD			TBD		
			600	1880.00															
			1175	1908.75															
		III	25	1851.25	15			TBD			TBD			TBD			TBD		
			600	1880.00															
			1175	1908.75															
		IV	25	1851.25	10			TBD			TBD			TBD			TBD		
			600	1880.00															
			1175	1908.75															
		V	25	1851.25	5			TBD			TBD			TBD			TBD		
			600	1880.00															
			1175	1908.75															

TABLE B-19 CDMA 1XEV-DO DATA 1900 MINIMUM TRP LEVEL REQUIREMENTS FOR THE PRIMARY MECHANICAL MODE[1]

Reference OTA Test Plan Table 5-25																				
Device Held Up to Head for Voice (Yes/No)	Antenna Type	Device Power Class	Channel	TX Frequency (MHz)	FS			HL			HR			BHHL			BHHR		
					Limit (dBm)	Test Results (dBm)	Pass / Fail / Info	Limit (dBm)	Test Results (dBm)	Pass / Fail / Info	Limit (dBm)	Test Results (dBm)	Pass / Fail / Info	Limit (dBm)	Test Results (dBm)	Pass / Fail / Info	Limit (dBm)	Test Results (dBm)	Pass / Fail / Info
No[3]	All	I	25	1851.25	25			N/A			N/A			N/A			N/A		
			600	1880.00															
			1175	1908.75															
		II	25	1851.25	20			N/A			N/A			N/A			N/A		
			600	1880.00															
			1175	1908.75															
		III	25	1851.25	15			N/A			N/A			N/A			N/A		
			600	1880.00															
			1175	1908.75															
		IV	25	1851.25	10			N/A			N/A			N/A			N/A		
			600	1880.00															
			1175	1908.75															
		V	25	1851.25	5			N/A			N/A			N/A			N/A		
			600	1880.00															
			1175	1908.75															

Note 1: Primary Mechanical Mode refers to device configured in preferred mode per manufacturer instructions (typically means antenna extended, fold or portrait slide open, but depends on form factor).

Note 2: "Yes" applies if the device supports voice operation in the talking position against the head in any cellular radio mode.

Note 3: "No" would be applicable to data-centric devices that are not held up against the head, e.g., embedded laptop solutions.

TABLE B-20 CDMA 1XEV-DO DATA 2100/1700 MINIMUM TRP LEVEL REQUIREMENTS FOR THE PRIMARY MECHANICAL MODE[1]

Reference OTA Test Plan Table 5-25																				
Device Held Up to Head for Voice (Yes/No)	Antenna Type	Device Power Class	Channel	TX Frequency (MHz)	FS			HL			HR			BHHL			BHHR		
					Limit (dBm)	Test Results (dBm)	Pass / Fail / Info	Limit (dBm)	Test Results (dBm)	Pass / Fail / Info	Limit (dBm)	Test Results (dBm)	Pass / Fail / Info	Limit (dBm)	Test Results (dBm)	Pass / Fail / Info	Limit (dBm)	Test Results (dBm)	Pass / Fail / Info
Yes[2]	Embedded	I	25	1711.25	22			TBD			TBD			TBD			TBD		
			450	1732.50															
			875	1753.75															
		II	25	1711.25	17			TBD			TBD			TBD			TBD		
			450	1732.50															
			875	1753.75															
		III	25	1711.25	12			TBD			TBD			TBD			TBD		
			450	1732.50															
			875	1753.75															
		IV	25	1711.25	7			TBD			TBD			TBD			TBD		
			450	1732.50															
			875	1753.75															
		V	25	1711.25	2			TBD			TBD			TBD			TBD		
			450	1732.50															
			875	1753.75															
	Stub or Retractable	I	25	1711.25	22			TBD			TBD			TBD			TBD		
			450	1732.50															
			875	1753.75															
		II	25	1711.25	17			TBD			TBD			TBD			TBD		
			450	1732.50															
			875	1753.75															
		III	25	1711.25	12			TBD			TBD			TBD			TBD		
			450	1732.50															
			875	1753.75															
		IV	25	1711.25	7			TBD			TBD			TBD			TBD		
			450	1732.50															
			875	1753.75															
		V	25	1711.25	2			TBD			TBD			TBD			TBD		
			450	1732.50															
			875	1753.75															

TABLE B-20 CDMA 1XEV-DO DATA 2100/1700 MINIMUM TRP LEVEL REQUIREMENTS FOR THE PRIMARY MECHANICAL MODE[1]

Reference OTA Test Plan Table 5-25																				
Device Held Up to Head for Voice (Yes/No)	Antenna Type	Device Power Class	Channel	TX Frequency (MHz)	FS			HL			HR			BHHL			BHHR		
					Limit (dBm)	Test Results (dBm)	Pass / Fail / Info	Limit (dBm)	Test Results (dBm)	Pass / Fail / Info	Limit (dBm)	Test Results (dBm)	Pass / Fail / Info	Limit (dBm)	Test Results (dBm)	Pass / Fail / Info	Limit (dBm)	Test Results (dBm)	Pass / Fail / Info
No[3]	All	I	25	1711.25	22			N/A			N/A			N/A			N/A		
			450	1732.50															
			875	1753.75															
		II	25	1711.25	17			N/A			N/A			N/A			N/A		
			450	1732.50															
			875	1753.75															
		III	25	1711.25	12			N/A			N/A			N/A			N/A		
			450	1732.50															
			875	1753.75															
		IV	25	1711.25	7			N/A			N/A			N/A			N/A		
			450	1732.50															
			875	1753.75															
		V	25	1711.25	2			N/A			N/A			N/A			N/A		
			450	1732.50															
			875	1753.75															

Note 1: Primary Mechanical Mode refers to device configured in preferred mode per manufacturer instructions (typically means antenna extended, fold or portrait slide open, but depends on form factor).

Note 2: "Yes" applies if the device supports voice operation in the talking position against the head in any cellular radio mode.

Note 3: "No" would be applicable to data-centric devices that are not held up against the head, e.g., embedded laptop solutions.

TABLE B-21 CDMA 1XEV-DO DATA 800 MAXIMUM TIS LEVEL REQUIREMENTS FOR THE PRIMARY MECHANICAL MODE[1]

Reference OTA Test Plan Table 6-9																			
Device Held Up to Head for Voice (Yes/No)	Antenna Type	Channel	RX Frequency (MHz)	FS			HL			HR			BHHL			BHHR		
				Limit (dBm)	Test Results (dBm)	Pass / Fail / Info	Limit (dBm)	Test Results (dBm)	Pass / Fail / Info	Limit (dBm)	Test Results (dBm)	Pass / Fail / Info	Limit (dBm)	Test Results (dBm)	Pass / Fail / Info	Limit (dBm)	Test Results (dBm)	Pass / Fail / Info
Yes[2]	Embedded	1013	869.70															
		384	881.52	-102.5			TBD			TBD			TBD			TBD		
		777	893.31															
	Stub or Retractable	1013	869.70															
		384	881.52	-102.5			TBD			TBD			TBD			TBD		
		777	893.31															
No[3]	All	1013	869.70															
		384	881.52	-102.5			N/A			N/A			N/A			N/A		
		777	893.31															

Note 1: Primary Mechanical Mode refers to device configured in preferred mode per manufacturer instructions (typically means antenna extended, fold or portrait slide open, but depends on form factor).

Note 2: “Yes” applies if the device supports voice operation in the talking position against the head in any cellular radio mode.

Note 3: “No” would be applicable to data-centric devices that are not held up against the head, e.g., embedded laptop solutions.

TABLE B-22 CDMA 1XEV-DO DATA 1900 MAXIMUM TIS LEVEL REQUIREMENTS FOR THE PRIMARY MECHANICAL MODE[1]

Reference OTA Test Plan Table 6-9																			
Device Held Up to Head for Voice (Yes/No)	Antenna Type	Channel	RX Frequency (MHz)	FS			HL			HR			BHHL			BHHR		
				Limit (dBm)	Test Results (dBm)	Pass / Fail / Info	Limit (dBm)	Test Results (dBm)	Pass / Fail / Info	Limit (dBm)	Test Results (dBm)	Pass / Fail / Info	Limit (dBm)	Test Results (dBm)	Pass / Fail / Info	Limit (dBm)	Test Results (dBm)	Pass / Fail / Info
Yes[2]	Embedded	25	1931.25	-102.5			TBD			TBD			TBD			TBD		
		600	1960.00															
		1175	1988.75															
	Stub or Retractable	25	1931.25	-102.5			TBD			TBD			TBD			TBD		
		600	1960.00															
		1175	1988.75															
No[3]	All	25	1931.25	-102.5			N/A			N/A			N/A			N/A		
		600	1960.00															
		1175	1988.75															

Note 1: Primary Mechanical Mode refers to device configured in preferred mode per manufacturer instructions (typically means antenna extended, fold or portrait slide open, but depends on form factor).

Note 2: "Yes" applies if the device supports voice operation in the talking position against the head in any cellular radio mode.

Note 3: "No" would be applicable to data-centric devices that are not held up against the head, e.g., embedded laptop solutions.

TABLE B-23 CDMA 1XEV-DO DATA 2100/1700 MAXIMUM TIS LEVEL REQUIREMENTS FOR THE PRIMARY MECHANICAL MODE[1]

Reference OTA Test Plan Table 6-9																			
Device Held Up to Head for Voice (Yes/No)	Antenna Type	Channel	RX Frequency (MHz)	FS			HL			HR			BHHL			BHHR		
				Limit (dBm)	Test Results (dBm)	Pass / Fail / Info	Limit (dBm)	Test Results (dBm)	Pass / Fail / Info	Limit (dBm)	Test Results (dBm)	Pass / Fail / Info	Limit (dBm)	Test Results (dBm)	Pass / Fail / Info	Limit (dBm)	Test Results (dBm)	Pass / Fail / Info
Yes[2]	Embedded	25	2111.25															
		450	2132.50	-102.5			TBD			TBD			TBD			TBD		
		875	2153.75															
	Stub or Retractable	25	2111.25															
		450	2132.50	-102.5			TBD			TBD			TBD			TBD		
		875	2153.75															
No[3]	All	25	2111.25															
		450	2132.50	-102.5			N/A			N/A			N/A			N/A		
		875	2153.75															

Note 1: Primary Mechanical Mode refers to device configured in preferred mode per manufacturer instructions (typically means antenna extended, fold or portrait slide open, but depends on form factor).

Note 2: "Yes" applies if the device supports voice operation in the talking position against the head in any cellular radio mode.

Note 3: "No" would be applicable to data-centric devices that are not held up against the head, e.g., embedded laptop solutions.

TABLE B-24 CDMA 1XEV-DO 800 MAXIMUM TIS AND BPD LEVEL REQUIREMENTS FOR THE PRIMARY MECHANICAL MODE[1]

Reference OTA Test Plan Table 6-9 and Table 6-11											
Device Held Up to Head for Voice (Yes/ No)	**Test Position**	**Channel**	**RX Frequency (MHz)**	**Primary antenna ("a"/"b")**	**Primary TIS (dBm)**	**Primary TIS Limit (dBm)**	**Pass / Fail / Info**	**Secondary TIS (dBm)**	**BPD (dB)**	**BPD Limit (dB)**	**Pass / Fail / Info**
Yes[2]	FS	1013	869.7			-102.5				TBD	
		384	881.52			-102.5				TBD	
		777	893.31			-102.5				TBD	
	HL	1013	869.7			TBD				TBD	
		384	881.52			TBD				TBD	
		777	893.31			TBD				TBD	
	HR	1013	869.7			TBD				TBD	
		384	881.52			TBD				TBD	
		777	893.31			TBD				TBD	
	BHHL	1013	869.7			TBD				TBD	
		384	881.52			TBD				TBD	
		777	893.31			TBD				TBD	
	BHHR	1013	869.7			TBD				TBD	
		384	881.52			TBD				TBD	
		777	893.31			TBD				TBD	
No[3]	FS	1013	869.7			-102.5				TBD	
		384	881.52			-102.5				TBD	
		777	893.31			-102.5				TBD	
Is antenna "a" dynamically activated (yes/no)?											
Is antenna "b" dynamically activated (yes/no)?											
Transmit antenna location ("a"/"b"/"other"):											

Note 1: Primary Mechanical Mode refers to device configured in preferred mode per manufacturer instructions (typically means antenna extended, fold or portrait slide open, but depends on form factor).

Note 2: "Yes" applies if the device supports voice operation in the talking position against the head in any cellular radio mode.

Note 3: "No" would be applicable to data-centric devices that are not held up against the head, e.g., embedded laptop solutions.

TABLE B-25 CDMA 1XEV-DO 1900 MAXIMUM TIS AND BPD LEVEL REQUIREMENTS FOR THE PRIMARY MECHANICAL MODE[1]

Reference OTA Test Plan Table 6-9 and Table 6-11											
Device Held Up to Head for Voice (Yes/ No)	**Test Position**	**Channel**	**RX Frequency (MHz)**	**Primary antenna ("a"/"b")**	**Primary TIS (dBm)**	**Primary TIS Limit (dBm)**	**Pass / Fail / Info**	**Secondary TIS (dBm)**	**BPD (dB)**	**BPD Limit (dB)**	**Pass / Fail / Info**
Yes[2]	FS	25	1931.25			-102.5				TBD	
		600	1960			-102.5				TBD	
		1175	1988.75			-102.5				TBD	
	HL	25	1931.25			TBD				TBD	
		600	1960			TBD				TBD	
		1175	1988.75			TBD				TBD	
	HR	25	1931.25			TBD				TBD	
		600	1960			TBD				TBD	
		1175	1988.75			TBD				TBD	
	BHHL	25	1931.25			TBD				TBD	
		600	1960			TBD				TBD	
		1175	1988.75			TBD				TBD	
	BHHR	25	1931.25			TBD				TBD	
		600	1960			TBD				TBD	
		1175	1988.75			TBD				TBD	
No[3]	FS	25	1931.25			-102.5				TBD	
		600	1960			-102.5				TBD	
		1175	1988.75			-102.5				TBD	
Is antenna "a" dynamically activated (yes/no)?											
Is antenna "b" dynamically activated (yes/no)?											
Transmit antenna location ("a"/"b"/"other"):											

Note 1: Primary Mechanical Mode refers to device configured in preferred mode per manufacturer instructions (typically means antenna extended, fold or portrait slide open, but depends on form factor).

Note 2: "Yes" applies if the device supports voice operation in the talking position against the head in any cellular radio mode.

Note 3: "No" would be applicable to data-centric devices that are not held up against the head, e.g., embedded laptop solutions.

TABLE B-26 CDMA 1XEV-DO 2100/1700 MAXIMUM TIS AND BPD LEVEL REQUIREMENTS FOR THE PRIMARY MECHANICAL MODE[1]

Reference OTA Test Plan Table 6-9 and Table 6-11											
Device Held Up to Head for Voice (Yes/ No)	**Test Position**	**Channel**	**RX Frequency (MHz)**	**Primary antenna ("a"/"b")**	**Primary TIS (dBm)**	**Primary TIS Limit (dBm)**	**Pass / Fail / Info**	**Secondary TIS (dBm)**	**BPD (dB)**	**BPD Limit (dB)**	**Pass / Fail / Info**
Yes[2]	FS	25	2111.25			-102.5				TBD	
		450	2132.5			-102.5				TBD	
		875	2153.75			-102.5				TBD	
	HL	25	2111.25			TBD				TBD	
		450	2132.5			TBD				TBD	
		875	2153.75			TBD				TBD	
	HR	25	2111.25			TBD				TBD	
		450	2132.5			TBD				TBD	
		875	2153.75			TBD				TBD	
	BHHL	25	2111.25			TBD				TBD	
		450	2132.5			TBD				TBD	
		875	2153.75			TBD				TBD	
	BHHR	25	2111.25			TBD				TBD	
		450	2132.5			TBD				TBD	
		875	2153.75			TBD				TBD	
No[3]	FS	25	2111.25			-102.5				TBD	
		450	2132.5			-102.5				TBD	
		875	2153.75			-102.5				TBD	
Is antenna "a" dynamically activated (yes/no)?											
Is antenna "b" dynamically activated (yes/no)?											
Transmit antenna location ("a"/"b"/"other"):											

Note 1: Primary Mechanical Mode refers to device configured in preferred mode per manufacturer instructions (typically means antenna extended, fold or portrait slide open, but depends on form factor).

Note 2: "Yes" applies if the device supports voice operation in the talking position against the head in any cellular radio mode.

Note 3: "No" would be applicable to data-centric devices that are not held up against the head, e.g., embedded laptop solutions.

TABLE B-27 CDMA 1XRTT DATA 800 MINIMUM TRP LEVEL REQUIREMENTS FOR THE PRIMARY MECHANICAL MODE[1]

Reference OTA Test Plan Table 5-29																				
Device Held Up to Head for Voice (Yes/No)	Antenna Type	Device Power Class	Channel	TX Frequency (MHz)	FS			HL			HR			BHHL			BHHR		
					Limit (dBm)	Test Results (dBm)	Pass / Fail / Info	Limit (dBm)	Test Results (dBm)	Pass / Fail / Info	Limit (dBm)	Test Results (dBm)	Pass / Fail / Info	Limit (dBm)	Test Results (dBm)	Pass / Fail / Info	Limit (dBm)	Test Results (dBm)	Pass / Fail / Info
Yes[2]	Embedded	I	1013	824.70	25			TBD			TBD			TBD			TBD		
			384	836.52															
			777	848.31															
		II	1013	824.70	22			TBD			TBD			TBD			TBD		
			384	836.52															
			777	848.31															
		III	1013	824.70	18			TBD			TBD			TBD			TBD		
			384	836.52															
			777	848.31															
	Stub or Retractable	I	1013	824.70	27			TBD			TBD			TBD			TBD		
			384	836.52															
			777	848.31															
		II	1013	824.70	24			TBD			TBD			TBD			TBD		
			384	836.52															
			777	848.31															
		III	1013	824.70	20			TBD			TBD			TBD			TBD		
			384	836.52															
			777	848.31															

TABLE B-27 CDMA 1XRTT DATA 800 MINIMUM TRP LEVEL REQUIREMENTS FOR THE PRIMARY MECHANICAL MODE[1]

Reference OTA Test Plan Table 5-29																				
Device Held Up to Head for Voice (Yes/No)	Antenna Type	Device Power Class	Channel	TX Frequency (MHz)	FS			HL			HR			BHHL			BHHR		
					Limit (dBm)	Test Results (dBm)	Pass / Fail / Info	Limit (dBm)	Test Results (dBm)	Pass / Fail / Info	Limit (dBm)	Test Results (dBm)	Pass / Fail / Info	Limit (dBm)	Test Results (dBm)	Pass / Fail / Info	Limit (dBm)	Test Results (dBm)	Pass / Fail / Info
No[3]	All	I	1013	824.70	27			N/A			N/A			N/A			N/A		
			384	836.52															
			777	848.31															
		II	1013	824.70	24			N/A			N/A			N/A			N/A		
			384	836.52															
			777	848.31															
		III	1013	824.70	20			N/A			N/A			N/A			N/A		
			384	836.52															
			777	848.31															

Note 1: Primary Mechanical Mode refers to device configured in preferred mode per manufacturer instructions (typically means antenna extended, fold or portrait slide open, but depends on form factor).

Note 2: "Yes" applies if the device supports voice operation in the talking position against the head in any cellular radio mode.

Note 3: "No" would be applicable to data-centric devices that are not held up against the head, e.g., embedded laptop solutions.

TABLE B-28 CDMA 1XRTT DATA 1900 MINIMUM TRP LEVEL REQUIREMENTS FOR THE PRIMARY MECHANICAL MODE[1]

Reference OTA Test Plan Table 5-29																				
					FS			HL			HR			BHHL			BHHR		
Device Held Up to Head for Voice (Yes/No)	Antenna Type	Device Power Class	Channel	TX Frequency (MHz)	Limit (dBm)	Test Results (dBm)	Pass / Fail / Info	Limit (dBm)	Test Results (dBm)	Pass / Fail / Info	Limit (dBm)	Test Results (dBm)	Pass / Fail / Info	Limit (dBm)	Test Results (dBm)	Pass / Fail / Info	Limit (dBm)	Test Results (dBm)	Pass / Fail / Info
Yes[2]	Embedded	I	25	1851.25	23			TBD			TBD			TBD			TBD		
			600	1880.00															
			1175	1908.75															
		II	25	1851.25	18			TBD			TBD			TBD			TBD		
			600	1880.00															
			1175	1908.75															
		III	25	1851.25	13			TBD			TBD			TBD			TBD		
			600	1880.00															
			1175	1908.75															
		IV	25	1851.25	8			TBD			TBD			TBD			TBD		
			600	1880.00															
			1175	1908.75															
		V	25	1851.25	3			TBD			TBD			TBD			TBD		
			600	1880.00															
			1175	1908.75															
	Stub or Retractable	I	25	1851.25	25			TBD			TBD			TBD			TBD		
			600	1880.00															
			1175	1908.75															
		II	25	1851.25	20			TBD			TBD			TBD			TBD		
			600	1880.00															
			1175	1908.75															
		III	25	1851.25	15			TBD			TBD			TBD			TBD		
			600	1880.00															
			1175	1908.75															
		IV	25	1851.25	10			TBD			TBD			TBD			TBD		
			600	1880.00															
			1175	1908.75															
		V	25	1851.25	5			TBD			TBD			TBD			TBD		
			600	1880.00															
			1175	1908.75															

TABLE B-28 CDMA 1XRTT DATA 1900 MINIMUM TRP LEVEL REQUIREMENTS FOR THE PRIMARY MECHANICAL MODE[1]

Reference OTA Test Plan Table 5-29																				
Device Held Up to Head for Voice (Yes/No)	Antenna Type	Device Power Class	Channel	TX Frequency (MHz)	FS			HL			HR			BHHL			BHHR		
					Limit (dBm)	Test Results (dBm)	Pass / Fail / Info	Limit (dBm)	Test Results (dBm)	Pass / Fail / Info	Limit (dBm)	Test Results (dBm)	Pass / Fail / Info	Limit (dBm)	Test Results (dBm)	Pass / Fail / Info	Limit (dBm)	Test Results (dBm)	Pass / Fail / Info
No[3]	All	I	25	1851.25	25			N/A			N/A			N/A			N/A		
			600	1880.00															
			1175	1908.75															
		II	25	1851.25	20			N/A			N/A			N/A			N/A		
			600	1880.00															
			1175	1908.75															
		III	25	1851.25	15			N/A			N/A			N/A			N/A		
			600	1880.00															
			1175	1908.75															
		IV	25	1851.25	10			N/A			N/A			N/A			N/A		
			600	1880.00															
			1175	1908.75															
		V	25	1851.25	5			N/A			N/A			N/A			N/A		
			600	1880.00															
			1175	1908.75															

Note 1: Primary Mechanical Mode refers to device configured in preferred mode per manufacturer instructions (typically means antenna extended, fold or portrait slide open, but depends on form factor).

Note 2: "Yes" applies if the device supports voice operation in the talking position against the head in any cellular radio mode.

Note 3: "No" would be applicable to data-centric devices that are not held up against the head, e.g., embedded laptop solutions.

TABLE B-29 CDMA 1XRTT DATA 2100/1700 MINIMUM TRP LEVEL REQUIREMENTS FOR THE PRIMARY MECHANICAL MODE[1]

Reference OTA Test Plan Table 5-29																				
					FS			HL			HR			BHHL			BHHR		
Device Held Up to Head for Voice (Yes/No)	Antenna Type	Device Power Class	Channel	TX Frequency (MHz)	Limit (dBm)	Test Results (dBm)	Pass / Fail / Info	Limit (dBm)	Test Results (dBm)	Pass / Fail / Info	Limit (dBm)	Test Results (dBm)	Pass / Fail / Info	Limit (dBm)	Test Results (dBm)	Pass / Fail / Info	Limit (dBm)	Test Results (dBm)	Pass / Fail / Info
Yes[2]	Embedded	I	25	1711.25	22			TBD			TBD			TBD			TBD		
			450	1732.50															
			875	1753.75															
		II	25	1711.25	17			TBD			TBD			TBD			TBD		
			450	1732.50															
			875	1753.75															
		III	25	1711.25	12			TBD			TBD			TBD			TBD		
			450	1732.50															
			875	1753.75															
		IV	25	1711.25	7			TBD			TBD			TBD			TBD		
			450	1732.50															
			875	1753.75															
		V	25	1711.25	2			TBD			TBD			TBD			TBD		
			450	1732.50															
			875	1753.75															
	Stub or Retractable	I	25	1711.25	22			TBD			TBD			TBD			TBD		
			450	1732.50															
			875	1753.75															
		II	25	1711.25	17			TBD			TBD			TBD			TBD		
			450	1732.50															
			875	1753.75															
		III	25	1711.25	12			TBD			TBD			TBD			TBD		
			450	1732.50															
			875	1753.75															
		IV	25	1711.25	7			TBD			TBD			TBD			TBD		
			450	1732.50															
			875	1753.75															
		V	25	1711.25	2			TBD			TBD			TBD			TBD		
			450	1732.50															
			875	1753.75															

TABLE B-29 CDMA 1XRTT DATA 2100/1700 MINIMUM TRP LEVEL REQUIREMENTS FOR THE PRIMARY MECHANICAL MODE[1]

Reference OTA Test Plan Table 5-29																				
Device Held Up to Head for Voice (Yes/No)	Antenna Type	Device Power Class	Channel	TX Frequency (MHz)	FS			HL			HR			BHHL			BHHR		
					Limit (dBm)	Test Results (dBm)	Pass / Fail / Info	Limit (dBm)	Test Results (dBm)	Pass / Fail / Info	Limit (dBm)	Test Results (dBm)	Pass / Fail / Info	Limit (dBm)	Test Results (dBm)	Pass / Fail / Info	Limit (dBm)	Test Results (dBm)	Pass / Fail / Info
No[3]	All	I	25	1711.25	22			N/A			N/A			N/A			N/A		
			450	1732.50															
			875	1753.75															
		II	25	1711.25	17			N/A			N/A			N/A			N/A		
			450	1732.50															
			875	1753.75															
		III	25	1711.25	12			N/A			N/A			N/A			N/A		
			450	1732.50															
			875	1753.75															
		IV	25	1711.25	7			N/A			N/A			N/A			N/A		
			450	1732.50															
			875	1753.75															
		V	25	1711.25	2			N/A			N/A			N/A			N/A		
			450	1732.50															
			875	1753.75															

Note 1: Primary Mechanical Mode refers to device configured in preferred mode per manufacturer instructions (typically means antenna extended, fold or portrait slide open, but depends on form factor).

Note 2: "Yes" applies if the device supports voice operation in the talking position against the head in any cellular radio mode.

Note 3: "No" would be applicable to data-centric devices that are not held up against the head, e.g., embedded laptop solutions.

TABLE B-30 CDMA 1XRTT DATA 800 MAXIMUM TIS LEVEL REQUIREMENTS FOR THE PRIMARY MECHANICAL MODE[1]

Reference OTA Test Plan Table 6-9 and Table 6-11																			
				FS			HL			HR			BHHL			BHHR			
Device Held Up to Head for Voice (Yes/No)	Antenna Type	Channel	RX Frequency (MHz)	Limit (dBm)	Test Results (dBm)	Pass / Fail / Info	Limit (dBm)	Test Results (dBm)	Pass / Fail / Info	Limit (dBm)	Test Results (dBm)	Pass / Fail / Info	Limit (dBm)	Test Results (dBm)	Pass / Fail / Info	Limit (dBm)	Test Results (dBm)	Pass / Fail / Info	
Yes[2]	Embedded	1013	869.70	-101			TBD			TBD			TBD			TBD			
		384	881.52																
		777	893.31																
	Stub or Retractable	1013	869.70	-101			TBD			TBD			TBD			TBD			
		384	881.52																
		777	893.31																
No[3]	All	1013	869.70	-101			N/A			N/A			N/A			N/A			
		384	881.52																
		777	893.31																

Note 1: Primary Mechanical Mode refers to device configured in preferred mode per manufacturer instructions (typically means antenna extended, fold or portrait slide open, but depends on form factor).

Note 2: “Yes” applies if the device supports voice operation in the talking position against the head in any cellular radio mode.

Note 3: “No” would be applicable to data-centric devices that are not held up against the head, e.g., embedded laptop solutions.

TABLE B-31 CDMA 1XRTT DATA 1900 MAXIMUM TIS LEVEL REQUIREMENTS FOR THE PRIMARY MECHANICAL MODE[1]

Reference OTA Test Plan Table 6-9 and Table 6-11																			
Device Held Up to Head for Voice (Yes/No)	Antenna Type	Channel	RX Frequency (MHz)	FS			HL			HR			BHHL			BHHR		
				Limit (dBm)	Test Results (dBm)	Pass / Fail / Info	Limit (dBm)	Test Results (dBm)	Pass / Fail / Info	Limit (dBm)	Test Results (dBm)	Pass / Fail / Info	Limit (dBm)	Test Results (dBm)	Pass / Fail / Info	Limit (dBm)	Test Results (dBm)	Pass / Fail / Info
Yes[2]	Embedded	25	1931.25	-101			TBD			TBD			TBD			TBD		
		600	1960.00															
		1175	1988.75															
	Stub or Retractable	25	1931.25	-101			TBD			TBD			TBD			TBD		
		600	1960.00															
		1175	1988.75															
No[3]	All	25	1931.25	-101			N/A			N/A			N/A			N/A		
		600	1960.00															
		1175	1988.75															

Note 1: Primary Mechanical Mode refers to device configured in preferred mode per manufacturer instructions (typically means antenna extended, fold or portrait slide open, but depends on form factor).

Note 2: "Yes" applies if the device supports voice operation in the talking position against the head in any cellular radio mode.

Note 3: "No" would be applicable to data-centric devices that are not held up against the head, e.g., embedded laptop solutions.

TABLE B-32 CDMA 1XRTT DATA 2100/1700 MAXIMUM TIS LEVEL REQUIREMENTS FOR THE PRIMARY MECHANICAL MODE[1]

Reference OTA Test Plan Table 6-9 and Table 6-11																			
				FS			HL			HR			BHHL			BHHR			
Device Held Up to Head for Voice (Yes/No)	Antenna Type	Channel	RX Frequency (MHz)	Limit (dBm)	Test Results (dBm)	Pass / Fail / Info	Limit (dBm)	Test Results (dBm)	Pass / Fail / Info	Limit (dBm)	Test Results (dBm)	Pass / Fail / Info	Limit (dBm)	Test Results (dBm)	Pass / Fail / Info	Limit (dBm)	Test Results (dBm)	Pass / Fail / Info	
Yes[2]	Embedded	25	2111.25																
		450	2132.50	-101			TBD			TBD			TBD			TBD			
		875	2153.75																
	Stub or Retractable	25	2111.25																
		450	2132.50	-101			TBD			TBD			TBD			TBD			
		875	2153.75																
No[3]	All	25	2111.25																
		450	2132.50	-101			N/A			N/A			N/A			N/A			
		875	2153.75																

Note 1: Primary Mechanical Mode refers to device configured in preferred mode per manufacturer instructions (typically means antenna extended, fold or portrait slide open, but depends on form factor).

Note 2: “Yes” applies if the device supports voice operation in the talking position against the head in any cellular radio mode.

Note 3: “No” would be applicable to data-centric devices that are not held up against the head, e.g., embedded laptop solutions.

TABLE B-33 CDMA 1XRTT 800 MAXIMUM TIS AND BPD LEVEL REQUIREMENTS FOR THE PRIMARY MECHANICAL MODE[1]

Reference OTA Test Plan Table 6-9 and Table 6-11											
Device Held Up to Head for Voice (Yes/ No)	**Test Position**	**Channel**	**RX Frequency (MHz)**	**Primary antenna ("a"/"b")**	**Primary TIS (dBm)**	**Primary TIS Limit (dBm)**	**Pass / Fail / Info**	**Secondary TIS (dBm)**	**BPD (dB)**	**BPD Limit (dB)**	**Pass / Fail / Info**
Yes[2]	FS	1013	869.7			-101				TBD	
		384	881.52			-101				TBD	
		777	893.31			-101				TBD	
	HL	1013	869.7			TBD				TBD	
		384	881.52			TBD				TBD	
		777	893.31			TBD				TBD	
	HR	1013	869.7			TBD				TBD	
		384	881.52			TBD				TBD	
		777	893.31			TBD				TBD	
	BHHL	1013	869.7			TBD				TBD	
		384	881.52			TBD				TBD	
		777	893.31			TBD				TBD	
	BHHR	1013	869.7			TBD				TBD	
		384	881.52			TBD				TBD	
		777	893.31			TBD				TBD	
No[3]	FS	1013	869.7			-101				TBD	
		384	881.52			-101				TBD	
		777	893.31			-101				TBD	
Is antenna "a" dynamically activated (yes/no)?											
Is antenna "b" dynamically activated (yes/no)?											
Transmit antenna location ("a"/"b"/"other"):											

Note 1: Primary Mechanical Mode refers to device configured in preferred mode per manufacturer instructions (typically means antenna extended, fold or portrait slide open, but depends on form factor).

Note 2: "Yes" applies if the device supports voice operation in the talking position against the head in any cellular radio mode.

Note 3: "No" would be applicable to data-centric devices that are not held up against the head, e.g., embedded laptop solutions.

TABLE B-34 CDMA 1XRTT 1900 MAXIMUM TIS AND BPD LEVEL REQUIREMENTS FOR THE PRIMARY MECHANICAL MODE[1]

Reference OTA Test Plan Table 6-9 and Table 6-11											
Device Held Up to Head for Voice (Yes/ No)	**Test Position**	**Channel**	**RX Frequency (MHz)**	**Primary antenna ("a"/"b")**	**Primary TIS (dBm)**	**Primary TIS Limit (dBm)**	**Pass / Fail / Info**	**Secondary TIS (dBm)**	**BPD (dB)**	**BPD Limit (dB)**	**Pass / Fail / Info**
Yes[2]	FS	25	1931.25			-101				TBD	
		600	1960			-101				TBD	
		1175	1988.75			-101				TBD	
	HL	25	1931.25			TBD				TBD	
		600	1960			TBD				TBD	
		1175	1988.75			TBD				TBD	
	HR	25	1931.25			TBD				TBD	
		600	1960			TBD				TBD	
		1175	1988.75			TBD				TBD	
	BHHL	25	1931.25			TBD				TBD	
		600	1960			TBD				TBD	
		1175	1988.75			TBD				TBD	
	BHHR	25	1931.25			TBD				TBD	
		600	1960			TBD				TBD	
		1175	1988.75			TBD				TBD	
No[3]	FS	25	1931.25			-101				TBD	
		600	1960			-101				TBD	
		1175	1988.75			-101				TBD	
Is antenna "a" dynamically activated (yes/no)?											
Is antenna "b" dynamically activated (yes/no)?											
Transmit antenna location ("a"/"b"/"other"):											

Note 1: Primary Mechanical Mode refers to device configured in preferred mode per manufacturer instructions (typically means antenna extended, fold or portrait slide open, but depends on form factor).

Note 2: "Yes" applies if the device supports voice operation in the talking position against the head in any cellular radio mode.

Note 3: "No" would be applicable to data-centric devices that are not held up against the head, e.g., embedded laptop solutions.

TABLE B-35 CDMA 1XRTT 2100/1700 MAXIMUM TIS AND BPD LEVEL REQUIREMENTS FOR THE PRIMARY MECHANICAL MODE[1]

Reference OTA Test Plan Table 6-9 and Table 6-11											
Device Held Up to Head for Voice (Yes/ No)	**Test Position**	**Channel**	**RX Frequency (MHz)**	**Primary antenna ("a"/"b")**	**Primary TIS (dBm)**	**Primary TIS Limit (dBm)**	**Pass / Fail / Info**	**Secondary TIS (dBm)**	**BPD (dB)**	**BPD Limit (dB)**	**Pass / Fail / Info**
Yes[2]	FS	25	2111.25			-101				TBD	
		450	2132.5			-101				TBD	
		875	2153.75			-101				TBD	
	HL	25	2111.25			TBD				TBD	
		450	2132.5			TBD				TBD	
		875	2153.75			TBD				TBD	
	HR	25	2111.25			TBD				TBD	
		450	2132.5			TBD				TBD	
		875	2153.75			TBD				TBD	
	BHHL	25	2111.25			TBD				TBD	
		450	2132.5			TBD				TBD	
		875	2153.75			TBD				TBD	
	BHHR	25	2111.25			TBD				TBD	
		450	2132.5			TBD				TBD	
		875	2153.75			TBD				TBD	
No[3]	FS	25	2111.25			-101				TBD	
		450	2132.5			-101				TBD	
		875	2153.75			-101				TBD	
Is antenna "a" dynamically activated (yes/no)?											
Is antenna "b" dynamically activated (yes/no)?											
Transmit antenna location ("a"/"b"/"other"):											

Note 1: Primary Mechanical Mode refers to device configured in preferred mode per manufacturer instructions (typically means antenna extended, fold or portrait slide open, but depends on form factor).

Note 2: "Yes" applies if the device supports voice operation in the talking position against the head in any cellular radio mode.

Note 3: "No" would be applicable to data-centric devices that are not held up against the head, e.g., embedded laptop solutions.

TABLE B-36 GSM 850 MINIMUM TRP LEVEL REQUIREMENTS FOR THE PRIMARY MECHANICAL MODE[1]

Reference OTA Test Plan Table 5-9																			
Device Held Up to Head for Voice (Yes/No)	Device Power Class	Channel	TX Frequency (MHz)	FS			HL[4]			HR[4]			BHHL			BHHR		
				Limit (dBm)	Test Results (dBm)	Pass / Fail / Info	Limit (dBm)	Test Results (dBm)	Pass / Fail / Info	Limit (dBm)	Test Results (dBm)	Pass / Fail / Info	Limit (dBm)	Test Results (dBm)	Pass / Fail / Info	Limit (dBm)	Test Results (dBm)	Pass / Fail / Info
Yes[2]	2	128	824.2	32			N/A			N/A			TBD			TBD		
		190	836.6															
		251	848.8															
	3	128	824.2	30			N/A			N/A			TBD			TBD		
		190	836.6															
		251	848.8															
	4	128	824.2	26			N/A			N/A			TBD			TBD		
		190	836.6															
		251	848.8															
	5	128	824.2	22			N/A			N/A			TBD			TBD		
		190	836.6															
		251	848.8															

TABLE B-36 GSM 850 MINIMUM TRP LEVEL REQUIREMENTS FOR THE PRIMARY MECHANICAL MODE[1]

Reference OTA Test Plan Table 5-9																			
Device Held Up to Head for Voice (Yes/No)	Device Power Class	Channel	TX Frequency (MHz)	FS			HL[4]			HR[4]			BHHL			BHHR		
				Limit (dBm)	Test Results (dBm)	Pass / Fail / Info	Limit (dBm)	Test Results (dBm)	Pass / Fail / Info	Limit (dBm)	Test Results (dBm)	Pass / Fail / Info	Limit (dBm)	Test Results (dBm)	Pass / Fail / Info	Limit (dBm)	Test Results (dBm)	Pass / Fail / Info
No[3]	2	128	824.2	32			N/A			N/A			N/A			N/A		
		190	836.6															
		251	848.8															
	3	128	824.2	30			N/A			N/A			N/A			N/A		
		190	836.6															
		251	848.8															
	4	128	824.2	26			N/A			N/A			N/A			N/A		
		190	836.6															
		251	848.8															
	5	128	824.2	22			N/A			N/A			N/A			N/A		
		190	836.6															
		251	848.8															

Note 1: Primary Mechanical Mode refers to device configured in preferred mode per manufacturer instructions (typically means antenna extended, fold or portrait slide open, but depends on form factor).

Note 2: “Yes” applies if the device supports voice operation in the talking position against the head in any cellular radio mode.

Note 3: “No” would be applicable to data-centric devices that are not held up against the head, e.g., embedded laptop solutions.

Note 4: GSM HL and HR tests are optional and are currently not a requirement of this Test Plan, but may be used for single and multiple offset point reference tests including GPRS/EGPRS.

TABLE B-37 GSM 1900 MINIMUM TRP LEVEL REQUIREMENTS FOR THE PRIMARY MECHANICAL MODE[1]

Reference OTA Test Plan Table 5-9																			
Device Held Up to Head for Voice (Yes/No)	Device Power Class	Channel	TX Frequency (MHz)	FS			HL[4]			HR[4]			BHHL			BHHR		
				Limit (dBm)	Test Results (dBm)	Pass / Fail / Info	Limit (dBm)	Test Results (dBm)	Pass / Fail / Info	Limit (dBm)	Test Results (dBm)	Pass / Fail / Info	Limit (dBm)	Test Results (dBm)	Pass / Fail / Info	Limit (dBm)	Test Results (dBm)	Pass / Fail / Info
Yes[2]	1	512	1850.2	24.5			N/A			N/A			TBD			TBD		
		661	1880															
		810	1909.8															
	2	512	1850.2	18.5			N/A			N/A			TBD			TBD		
		661	1880															
		810	1909.8															
	3	512	1850.2	27.5			N/A			N/A			TBD			TBD		
		661	1880															
		810	1909.8															
No[3]	1	512	1850.2	24.5			N/A			N/A			N/A			N/A		
		661	1880															
		810	1909.8															
	2	512	1850.2	18.5			N/A			N/A			N/A			N/A		
		661	1880															
		810	1909.8															
	3	512	1850.2	27.5			N/A			N/A			N/A			N/A		
		661	1880															
		810	1909.8															

Note 1: Primary Mechanical Mode refers to device configured in preferred mode per manufacturer instructions (typically means antenna extended, fold or portrait slide open, but depends on form factor).

Note 2: "Yes" applies if the device supports voice operation in the talking position against the head in any cellular radio mode.

Note 3: "No" would be applicable to data-centric devices that are not held up against the head, e.g., embedded laptop solutions.

Note 4: GSM HL and HR tests are optional and are currently not a requirement of this Test Plan, but may be used for single and multiple offset point reference tests including GPRS/EGPRS.

TABLE B-38 GSM 850 MAXIMUM TIS LEVEL REQUIREMENTS FOR THE PRIMARY MECHANICAL MODE[1]

Reference OTA Test Plan Table 6-2																			
Device Held Up to Head for Voice (Yes/No)	Device Power Class	Channel	RX Frequency (MHz)	FS			HL[4]			HR[4]			BHHL			BHHR		
				Limit (dBm)	Test Results (dBm)	Pass / Fail / Info	Limit (dBm)	Test Results (dBm)	Pass / Fail / Info	Limit (dBm)	Test Results (dBm)	Pass / Fail / Info	Limit (dBm)	Test Results (dBm)	Pass / Fail / Info	Limit (dBm)	Test Results (dBm)	Pass / Fail / Info
Yes[2]	2	128	869.2	-99			N/A			N/A			TBD			TBD		
		190	881.6															
		251	893.8															
	3	128	869.2	-99			N/A			N/A			TBD			TBD		
		190	881.6															
		251	893.8															
	4	128	869.2	-99			N/A			N/A			TBD			TBD		
		190	881.6															
		251	893.8															
	5	128	869.2	-99			N/A			N/A			TBD			TBD		
		190	881.6															
		251	893.8															

TABLE B-38 GSM 850 MAXIMUM TIS LEVEL REQUIREMENTS FOR THE PRIMARY MECHANICAL MODE[1]

Reference OTA Test Plan Table 6-2																			
Device Held Up to Head for Voice (Yes/No)	Device Power Class	Channel	RX Frequency (MHz)	FS			HL[4]			HR[4]			BHHL			BHHR		
				Limit (dBm)	Test Results (dBm)	Pass / Fail / Info	Limit (dBm)	Test Results (dBm)	Pass / Fail / Info	Limit (dBm)	Test Results (dBm)	Pass / Fail / Info	Limit (dBm)	Test Results (dBm)	Pass / Fail / Info	Limit (dBm)	Test Results (dBm)	Pass / Fail / Info
No[3]	2	128	869.2	-99			N/A			N/A			N/A			N/A		
		190	881.6															
		251	893.8															
	3	128	869.2	-99			N/A			N/A			N/A			N/A		
		190	881.6															
		251	893.8															
	4	128	869.2	-99			N/A			N/A			N/A			N/A		
		190	881.6															
		251	893.8															
	5	128	869.2	-99			N/A			N/A			N/A			N/A		
		190	881.6															
		251	893.8															

Note 1: Primary Mechanical Mode refers to device configured in preferred mode per manufacturer instructions (typically means antenna extended, fold or portrait slide open, but depends on form factor).

Note 2: "Yes" applies if the device supports voice operation in the talking position against the head in any cellular radio mode.

Note 3: "No" would be applicable to data-centric devices that are not held up against the head, e.g., embedded laptop solutions.

Note 4: GSM HL and HR tests are optional and are currently not a requirement of this Test Plan, but may be used for single and multiple offset point reference tests including GPRS/EGPRS.

TABLE B-39 GSM 1900 MAXIMUM TIS LEVEL REQUIREMENTS FOR THE PRIMARY MECHANICAL MODE[1]

Reference OTA Test Plan Table 6-2																			
Device Held Up to Head for Voice (Yes/No)	Device Power Class	Channel	RX Frequency (MHz)	FS			HL[4]			HR[4]			BHHL			BHHR		
				Limit (dBm)	Test Results (dBm)	Pass / Fail / Info	Limit (dBm)	Test Results (dBm)	Pass / Fail / Info	Limit (dBm)	Test Results (dBm)	Pass / Fail / Info	Limit (dBm)	Test Results (dBm)	Pass / Fail / Info	Limit (dBm)	Test Results (dBm)	Pass / Fail / Info
Yes[2]	1	512	1930.2	-101.5			N/A			N/A			TBD			TBD		
		661	1960															
		810	1989.8															
	2	512	1930.2	-101.5			N/A			N/A			TBD			TBD		
		661	1960															
		810	1989.8															
	3	512	1930.2	-101.5			N/A			N/A			TBD			TBD		
		661	1960															
		810	1989.8															
No[3]	1	512	1930.2	-101.5			N/A			N/A			N/A			N/A		
		661	1960															
		810	1989.8															
	2	512	1930.2	-101.5			N/A			N/A			N/A			N/A		
		661	1960															
		810	1989.8															
	3	512	1930.2	-101.5			N/A			N/A			N/A			N/A		
		661	1960															
		810	1989.8															

Note 1: Primary Mechanical Mode refers to device configured in preferred mode per manufacturer instructions (typically means antenna extended, fold or portrait slide open, but depends on form factor).

Note 2: "Yes" applies if the device supports voice operation in the talking position against the head in any cellular radio mode.

Note 3: "No" would be applicable to data-centric devices that are not held up against the head, e.g., embedded laptop solutions.

Note 4: GSM HL and HR tests are optional and are currently not a requirement of this Test Plan, but may be used for single and multiple offset point reference tests including GPRS/EGPRS.

TABLE B-40 GPRS 850 MINIMUM TRP LEVEL REQUIREMENTS FOR THE PRIMARY MECHANICAL MODE[1] [2]

Reference OTA Test Plan Table 5-13																				
Device Held Up to Head for Voice (Yes/No)	Multi-slot Class	Device Power Class	Channel	TX Frequency (MHz)	FS			HL			HR			BHHL			BHHR		
					Limit (dBm)	Test Results (dBm)	Pass / Fail / Info	Limit (dBm)	Test Results (dBm)	Pass / Fail / Info	Limit (dBm)	Test Results (dBm)	Pass / Fail / Info	Limit (dBm)	Test Results (dBm)	Pass / Fail / Info	Limit (dBm)	Test Results (dBm)	Pass / Fail / Info
Yes[3]		2	128	824.2	32			TBD			TBD			TBD			TBD		
			190	836.6															
			251	848.8															
		3	128	824.2	30			TBD			TBD			TBD			TBD		
			190	836.6															
			251	848.8															
		4	128	824.2	26			TBD			TBD			TBD			TBD		
			190	836.6															
			251	848.8															
		5	128	824.2	22			TBD			TBD			TBD			TBD		
			190	836.6															
			251	848.8															

TABLE B-40 GPRS 850 MINIMUM TRP LEVEL REQUIREMENTS FOR THE PRIMARY MECHANICAL MODE[1] [2]

Reference OTA Test Plan Table 5-13																				
Device Held Up to Head for Voice (Yes/No)	Multi-slot Class	Device Power Class	Channel	TX Frequency (MHz)	FS			HL			HR			BHHL			BHHR		
					Limit (dBm)	Test Results (dBm)	Pass / Fail / Info	Limit (dBm)	Test Results (dBm)	Pass / Fail / Info	Limit (dBm)	Test Results (dBm)	Pass / Fail / Info	Limit (dBm)	Test Results (dBm)	Pass / Fail / Info	Limit (dBm)	Test Results (dBm)	Pass / Fail / Info
No[4]		2	128	824.2	32			N/A			N/A			N/A			N/A		
			190	836.6															
			251	848.8															
		3	128	824.2	30			N/A			N/A			N/A			N/A		
			190	836.6															
			251	848.8															
		4	128	824.2	26			N/A			N/A			N/A			N/A		
			190	836.6															
			251	848.8															
		5	128	824.2	22			N/A			N/A			N/A			N/A		
			190	836.6															
			251	848.8															

Note 1: Primary Mechanical Mode refers to device configured in preferred mode per manufacturer instructions (typically means antenna extended, fold or portrait slide open, but depends on form factor).

Note 2: The associated TRP value is based on measurements made with one uplink slot. Devices tested using two uplink time slots are allowed a TRP reduction of 3 dB, devices tested using three uplink slots are allowed a TRP reduction of up to 4.8 dB and devices tested using four uplink slots are allowed a TRP reduction of up to 6 dB. These allowances for uplink slot counts greater than one are based on an EUT capable of meeting the minimum TRP performance in single slot operation. This allowance is in alignment with 3GPP TS 45.005, Section 4.1.1, Table 4.1.-5.

Note 3: "Yes" applies if the device supports voice operation in the talking position against the head in any cellular radio mode.

Note 4: "No" would be applicable to data-centric devices that are not held up against the head, e.g., embedded laptop solutions.

TABLE B-41 GPRS 1900 MINIMUM TRP LEVEL REQUIREMENTS FOR THE PRIMARY MECHANICAL MODE[1] [2]

Reference OTA Test Plan Table 5-13																				
Device Held Up to Head for Voice (Yes/No)	Multi-slot Class	Device Power Class	Channel	TX Frequency (MHz)	FS			HL			HR			BHHL			BHHR		
					Limit (dBm)	Test Results (dBm)	Pass / Fail / Info	Limit (dBm)	Test Results (dBm)	Pass / Fail / Info	Limit (dBm)	Test Results (dBm)	Pass / Fail / Info	Limit (dBm)	Test Results (dBm)	Pass / Fail / Info	Limit (dBm)	Test Results (dBm)	Pass / Fail / Info
Yes[3]		1	512	1850.2	24.5			TBD			TBD			TBD			TBD		
			661	1880															
			810	1909.8															
		2	512	1850.2	18.5			TBD			TBD			TBD			TBD		
			661	1880															
			810	1909.8															
		3	512	1850.2	27.5			TBD			TBD			TBD			TBD		
			661	1880															
			810	1909.8															
No[4]		1	512	1850.2	24.5			N/A			N/A			N/A			N/A		
			661	1880															
			810	1909.8															
		2	512	1850.2	18.5			N/A			N/A			N/A			N/A		
			661	1880															
			810	1909.8															
		3	512	1850.2	27.5			N/A			N/A			N/A			N/A		
			661	1880															
			810	1909.8															

Note 1: Primary Mechanical Mode refers to device configured in preferred mode per manufacturer instructions (typically means antenna extended, fold or portrait slide open, but depends on form factor).

Note 2: The associated TRP value is based on measurements made with one uplink slot. Devices tested using two uplink time slots are allowed a TRP reduction of 3 dB, devices tested using three uplink slots are allowed a TRP reduction of up to 4.8 dB and devices tested using four uplink slots are allowed a TRP reduction of up to 6 dB. These allowances for uplink slot counts greater than one are based on an EUT capable of meeting the minimum TRP performance in single slot operation. This allowance is in alignment with 3GPP TS 45.005, Section 4.1.1, Table 4.1.-5.

Note 3: "Yes" applies if the device supports voice operation in the talking position against the head in any cellular radio mode.

Note 4: "No" would be applicable to data-centric devices that are not held up against the head, e.g., embedded laptop solutions.

TABLE B-42 GPRS 850 MAXIMUM TIS LEVEL REQUIREMENTS FOR THE PRIMARY MECHANICAL MODE[1]

Reference OTA Test Plan Table 6-3																				
Device Held Up to Head for Voice (Yes/No)	Multi-slot Class	Device Power Class	Channel	RX Frequency (MHz)	FS			HL			HR			BHHL			BHHR		
					Limit (dBm)	Test Results (dBm)	Pass / Fail / Info	Limit (dBm)	Test Results (dBm)	Pass / Fail / Info	Limit (dBm)	Test Results (dBm)	Pass / Fail / Info	Limit (dBm)	Test Results (dBm)	Pass / Fail / Info	Limit (dBm)	Test Results (dBm)	Pass / Fail / Info
Yes[2]		2	128	869.2	-99			TBD			TBD			TBD			TBD		
			190	881.6															
			251	893.8															
		3	128	869.2	-99			TBD			TBD			TBD			TBD		
			190	881.6															
			251	893.8															
		4	128	869.2	-99			TBD			TBD			TBD			TBD		
			190	881.6															
			251	893.8															
		5	128	869.2	-99			TBD			TBD			TBD			TBD		
			190	881.6															
			251	893.8															

TABLE B-42 GPRS 850 MAXIMUM TIS LEVEL REQUIREMENTS FOR THE PRIMARY MECHANICAL MODE[1]

Reference OTA Test Plan Table 6-3																				
Device Held Up to Head for Voice (Yes/No)	Multi-slot Class	Device Power Class	Channel	RX Frequency (MHz)	FS			HL			HR			BHHL			BHHR		
					Limit (dBm)	Test Results (dBm)	Pass / Fail / Info	Limit (dBm)	Test Results (dBm)	Pass / Fail / Info	Limit (dBm)	Test Results (dBm)	Pass / Fail / Info	Limit (dBm)	Test Results (dBm)	Pass / Fail / Info	Limit (dBm)	Test Results (dBm)	Pass / Fail / Info
No[3]		2	128	869.2	-99			N/A			N/A			N/A			N/A		
			190	881.6															
			251	893.8															
		3	128	869.2	-99			N/A			N/A			N/A			N/A		
			190	881.6															
			251	893.8															
		4	128	869.2	-99			N/A			N/A			N/A			N/A		
			190	881.6															
			251	893.8															
		5	128	869.2	-99			N/A			N/A			N/A			N/A		
			190	881.6															
			251	893.8															

Note 1: Primary Mechanical Mode refers to device configured in preferred mode per manufacturer instructions (typically means antenna extended, fold or portrait slide open, but depends on form factor).

Note 2: "Yes" applies if the device supports voice operation in the talking position against the head in any cellular radio mode.

Note 3: "No" would be applicable to data-centric devices that are not held up against the head, e.g., embedded laptop solutions.

TABLE B-43 GPRS 1900 MAXIMUM TIS LEVEL REQUIREMENTS FOR THE PRIMARY MECHANICAL MODE[1]

Reference OTA Test Plan Table 6-3																				
					FS			HL			HR			BHHL			BHHR		
Device Held Up to Head for Voice (Yes/No)	Multi-slot Class	Device Power Class	Channel	RX Frequency (MHz)	Limit (dBm)	Test Results (dBm)	Pass / Fail / Info	Limit (dBm)	Test Results (dBm)	Pass / Fail / Info	Limit (dBm)	Test Results (dBm)	Pass / Fail / Info	Limit (dBm)	Test Results (dBm)	Pass / Fail / Info	Limit (dBm)	Test Results (dBm)	Pass / Fail / Info
Yes[2]		1	512	1930.2	-101.5			TBD			TBD			TBD			TBD		
			661	1960															
			810	1989.8															
		2	512	1930.2	-101.5			TBD			TBD			TBD			TBD		
			661	1960															
			810	1989.8															
		3	512	1930.2	-101.5			TBD			TBD			TBD			TBD		
			661	1960															
			810	1989.8															
No[3]		1	512	1930.2	-101.5			N/A			N/A			N/A			N/A		
			661	1960															
			810	1989.8															
		2	512	1930.2	-101.5			N/A			N/A			N/A			N/A		
			661	1960															
			810	1989.8															
		3	512	1930.2	-101.5			N/A			N/A			N/A			N/A		
			661	1960															
			810	1989.8															

Note 1: Primary Mechanical Mode refers to device configured in preferred mode per manufacturer instructions (typically means antenna extended, fold or portrait slide open, but depends on form factor).

Note 2: "Yes" applies if the device supports voice operation in the talking position against the head in any cellular radio mode.

Note 3: "No" would be applicable to data-centric devices that are not held up against the head, e.g., embedded laptop solutions.

TABLE B-44 EGPRS 850 MINIMUM TRP LEVEL REQUIREMENTS FOR THE PRIMARY MECHANICAL MODE[1 2]

Reference OTA Test Plan Table 5-17																				
Device Held Up to Head for Voice (Yes/No)	Multi-slot Class	Device Power Class	Channel	TX Frequency (MHz)	FS			HL			HR			BHHL			BHHR		
					Limit (dBm)	Test Results (dBm)	Pass / Fail / Info	Limit (dBm)	Test Results (dBm)	Pass / Fail / Info	Limit (dBm)	Test Results (dBm)	Pass / Fail / Info	Limit (dBm)	Test Results (dBm)	Pass / Fail / Info	Limit (dBm)	Test Results (dBm)	Pass / Fail / Info
Yes[3]		E1	128	824.2	26			TBD			TBD			TBD			TBD		
			190	836.6															
			251	848.8															
		E2	128	824.2	20			TBD			TBD			TBD			TBD		
			190	836.6															
			251	848.8															
		E3	128	824.2	16			TBD			TBD			TBD			TBD		
			190	836.6															
			251	848.8															
No[4]		E1	128	824.2	26			N/A			N/A			N/A			N/A		
			190	836.6															
			251	848.8															
		E2	128	824.2	20			N/A			N/A			N/A			N/A		
			190	836.6															
			251	848.8															
		E3	128	824.2	16			N/A			N/A			N/A			N/A		
			190	836.6															
			251	848.8															

Note 1: Primary Mechanical Mode refers to device configured in preferred mode per manufacturer instructions (typically means antenna extended, fold or portrait slide open, but depends on form factor).

Note 2: The associated TRP value is based on measurements made with one or two uplink slots. Devices tested using three uplink slots are allowed a TRP reduction of up to 1.8 dB and devices tested using four uplink slots are allowed a TRP reduction of up to 3 dB. These allowances for uplink slot counts greater than two are based on an EUT capable of meeting the minimum TRP performance in single or dual-slot operation.

Note 3: "Yes" applies if the device supports voice operation in the talking position against the head in any cellular radio mode.

Note 4: "No" would be applicable to data-centric devices that are not held up against the head, e.g., embedded laptop solutions.

TABLE B-45 EGPRS 1900 MINIMUM TRP LEVEL REQUIREMENTS FOR THE PRIMARY MECHANICAL MODE[1 2]

Reference OTA Test Plan Table 5-17																				
Device Held Up to Head for Voice (Yes/No)	Multi-slot Class	Device Power Class	Channel	TX Frequency (MHz)	FS			HL			HR			BHHL			BHHR		
					Limit (dBm)	Test Results (dBm)	Pass / Fail / Info	Limit (dBm)	Test Results (dBm)	Pass / Fail / Info	Limit (dBm)	Test Results (dBm)	Pass / Fail / Info	Limit (dBm)	Test Results (dBm)	Pass / Fail / Info	Limit (dBm)	Test Results (dBm)	Pass / Fail / Info
Yes[3]		E1	512	1850.2	24.5			TBD			TBD			TBD			TBD		
			661	1880															
			810	1909.8															
		E2	512	1850.2	20.5			TBD			TBD			TBD			TBD		
			661	1880															
			810	1909.8															
		E3	512	1850.2	16.5			TBD			TBD			TBD			TBD		
			661	1880															
			810	1909.8															
No[4]		E1	512	1850.2	24.5			N/A			N/A			N/A			N/A		
			661	1880															
			810	1909.8															
		E2	512	1850.2	20.5			N/A			N/A			N/A			N/A		
			661	1880															
			810	1909.8															
		E3	512	1850.2	16.5			N/A			N/A			N/A			N/A		
			661	1880															
			810	1909.8															

Note 1: Primary Mechanical Mode refers to device configured in preferred mode per manufacturer instructions (typically means antenna extended, fold or portrait slide open, but depends on form factor).

Note 2: The associated TRP value is based on measurements made with one or two uplink slots. Devices tested using three uplink slots are allowed a TRP reduction of up to 1.8 dB and devices tested using four uplink slots are allowed a TRP reduction of up to 3 dB. These allowances for uplink slot counts greater than two are based on an EUT capable of meeting the minimum TRP performance in single or dual-slot operation.

Note 3: “Yes” applies if the device supports voice operation in the talking position against the head in any cellular radio mode.

Note 4: “No” would be applicable to data-centric devices that are not held up against the head, e.g., embedded laptop solutions.

TABLE B-46 EGPRS 850 MAXIMUM TIS LEVEL REQUIREMENTS FOR THE PRIMARY MECHANICAL MODE[1]

Reference OTA Test Plan Table 6-4																				
Device Held Up to Head for Voice (Yes/No)	Multi-slot Class	Device Power Class	Channel	RX Frequency (MHz)	FS			HL			HR			BHHL			BHHR		
					Limit (dBm)	Test Results (dBm)	Pass / Fail / Info	Limit (dBm)	Test Results (dBm)	Pass / Fail / Info	Limit (dBm)	Test Results (dBm)	Pass / Fail / Info	Limit (dBm)	Test Results (dBm)	Pass / Fail / Info	Limit (dBm)	Test Results (dBm)	Pass / Fail / Info
Yes[2]		E1	128	869.2	-94			TBD			TBD			TBD			TBD		
			190	881.6															
			251	893.8															
		E2	128	869.2	-94			TBD			TBD			TBD			TBD		
			190	881.6															
			251	893.8															
		E3	128	869.2	-94			TBD			TBD			TBD			TBD		
			190	881.6															
			251	893.8															
No[3]		E1	128	869.2	-94			N/A			N/A			N/A			N/A		
			190	881.6															
			251	893.8															
		E2	128	869.2	-94			N/A			N/A			N/A			N/A		
			190	881.6															
			251	893.8															
		E3	128	869.2	-94			N/A			N/A			N/A			N/A		
			190	881.6															
			251	893.8															

Note 1: Primary Mechanical Mode refers to device configured in preferred mode per manufacturer instructions (typically means antenna extended, fold or portrait slide open, but depends on form factor).

Note 2: "Yes" applies if the device supports voice operation in the talking position against the head in any cellular radio mode.

Note 3: "No" would be applicable to data-centric devices that are not held up against the head, e.g., embedded laptop solutions.

TABLE B-47 EGPRS 1900 MAXIMUM TIS LEVEL REQUIREMENTS FOR THE PRIMARY MECHANICAL MODE[1]

Reference OTA Test Plan Table 6-4																				
Device Held Up to Head for Voice (Yes/No)	Multi-slot Class	Device Power Class	Channel	RX Frequency (MHz)	FS			HL			HR			BHHL			BHHR		
					Limit (dBm)	Test Results (dBm)	Pass / Fail / Info	Limit (dBm)	Test Results (dBm)	Pass / Fail / Info	Limit (dBm)	Test Results (dBm)	Pass / Fail / Info	Limit (dBm)	Test Results (dBm)	Pass / Fail / Info	Limit (dBm)	Test Results (dBm)	Pass / Fail / Info
Yes[2]		E1	512	1930.2	-97			TBD			TBD			TBD			TBD		
			661	1960															
			810	1989.8															
		E2	512	1930.2	-97			TBD			TBD			TBD			TBD		
			661	1960															
			810	1989.8															
		E3	512	1930.2	-97			TBD			TBD			TBD			TBD		
			661	1960															
			810	1989.8															
No[3]		E1	512	1930.2	-97			N/A			N/A			N/A			N/A		
			661	1960															
			810	1989.8															
		E2	512	1930.2	-97			N/A			N/A			N/A			N/A		
			661	1960															
			810	1989.8															
		E3	512	1930.2	-97			N/A			N/A			N/A			N/A		
			661	1960															
			810	1989.8															

Note 1: Primary Mechanical Mode refers to device configured in preferred mode per manufacturer instructions (typically means antenna extended, fold or portrait slide open, but depends on form factor).

Note 2: "Yes" applies if the device supports voice operation in the talking position against the head in any cellular radio mode.

Note 3: "No" would be applicable to data-centric devices that are not held up against the head, e.g., embedded laptop solutions.

TABLE B-48 UMTS 850 MINIMUM TRP LEVEL REQUIREMENTS FOR THE PRIMARY MECHANICAL MODE[1]

Reference OTA Test Plan Table 5-19																			
Device Held Up to Head for Voice (Yes/No)	Device Power Class	Channel	TX Frequency (MHz)	FS			HL			HR			BHHL			BHHR		
				Limit (dBm)	Test Results (dBm)	Pass / Fail / Info	Limit (dBm)	Test Results (dBm)	Pass / Fail / Info	Limit (dBm)	Test Results (dBm)	Pass / Fail / Info	Limit (dBm)	Test Results (dBm)	Pass / Fail / Info	Limit (dBm)	Test Results (dBm)	Pass / Fail / Info
Yes[2]	3	4132	826.40	17			TBD			TBD			TBD			TBD		
		4183	836.60															
		4233	846.60															
	4	4132	826.40	14			TBD			TBD			TBD			TBD		
		4183	836.60															
		4233	846.60															
No[3]	3	4132	826.40	17			N/A			N/A			N/A			N/A		
		4183	836.60															
		4233	846.60															
	4	4132	826.40	14			N/A			N/A			N/A			N/A		
		4183	836.60															
		4233	846.60															

Note 1: Primary Mechanical Mode refers to device configured in preferred mode per manufacturer instructions (typically means antenna extended, fold or portrait slide open, but depends on form factor).

Note 2: "Yes" applies if the device supports voice operation in the talking position against the head in any cellular radio mode.

Note 3: "No" would be applicable to data-centric devices that are not held up against the head, e.g., embedded laptop solutions.

TABLE B-49 UMTS 1900 MINIMUM TRP LEVEL REQUIREMENTS FOR THE PRIMARY MECHANICAL MODE[1]

Reference OTA Test Plan Table 5-19																			
Device Held Up to Head for Voice (Yes/No)	Device Power Class	Channel	TX Frequency (MHz)	FS			HL			HR			BHHL			BHHR		
				Limit (dBm)	Test Results (dBm)	Pass / Fail / Info	Limit (dBm)	Test Results (dBm)	Pass / Fail / Info	Limit (dBm)	Test Results (dBm)	Pass / Fail / Info	Limit (dBm)	Test Results (dBm)	Pass / Fail / Info	Limit (dBm)	Test Results (dBm)	Pass / Fail / Info
Yes[2]	3	9262	1852.40	18.5			TBD			TBD			TBD			TBD		
		9400	1880.00															
		9538	1907.60															
	4	9262	1852.40	15.5			TBD			TBD			TBD			TBD		
		9400	1880.00															
		9538	1907.60															
No[3]	3	9262	1852.40	18.5			N/A			N/A			N/A			N/A		
		9400	1880.00															
		9538	1907.60															
	4	9262	1852.40	15.5			N/A			N/A			N/A			N/A		
		9400	1880.00															
		9538	1907.60															

Note 1: Primary Mechanical Mode refers to device configured in preferred mode per manufacturer instructions (typically means antenna extended, fold or portrait slide open, but depends on form factor).

Note 2: "Yes" applies if the device supports voice operation in the talking position against the head in any cellular radio mode.

Note 3: "No" would be applicable to data-centric devices that are not held up against the head, e.g., embedded laptop solutions.

TABLE B-50 UMTS 2100/1700 MINIMUM TRP LEVEL REQUIREMENTS FOR THE PRIMARY MECHANICAL MODE[1]

Reference OTA Test Plan Table 5-19																			
Device Held Up to Head for Voice (Yes/No)	Device Power Class	Channel	TX Frequency (MHz)	FS			HL			HR			BHHL			BHHR		
				Limit (dBm)	Test Results (dBm)	Pass / Fail / Info	Limit (dBm)	Test Results (dBm)	Pass / Fail / Info	Limit (dBm)	Test Results (dBm)	Pass / Fail / Info	Limit (dBm)	Test Results (dBm)	Pass / Fail / Info	Limit (dBm)	Test Results (dBm)	Pass / Fail / Info
Yes[2]	3	1312	1712.40	19.5			TBD			TBD			TBD			TBD		
		1413	1732.60															
		1513	1752.60															
	4	1312	1712.40	16.5			TBD			TBD			TBD			TBD		
		1413	1732.60															
		1513	1752.60															
No[3]	3	1312	1712.40	19.5			N/A			N/A			N/A			N/A		
		1413	1732.60															
		1513	1752.60															
	4	1312	1712.40	16.5			N/A			N/A			N/A			N/A		
		1413	1732.60															
		1513	1752.60															

Note 1: Primary Mechanical Mode refers to device configured in preferred mode per manufacturer instructions (typically means antenna extended, fold or portrait slide open, but depends on form factor).

Note 2: "Yes" applies if the device supports voice operation in the talking position against the head in any cellular radio mode.

Note 3: "No" would be applicable to data-centric devices that are not held up against the head, e.g., embedded laptop solutions.

TABLE B-51 UMTS 850 MAXIMUM TIS LEVEL REQUIREMENTS FOR THE PRIMARY MECHANICAL MODE[1]

Reference OTA Test Plan Table 6-5																			
				FS			HL			HR			BHHL			BHHR			
Device Held Up to Head for Voice (Yes/No)	Device Power Class	Channel	RX Frequency (MHz)	Limit (dBm)	Test Results (dBm)	Pass / Fail / Info	Limit (dBm)	Test Results (dBm)	Pass / Fail / Info	Limit (dBm)	Test Results (dBm)	Pass / Fail / Info	Limit (dBm)	Test Results (dBm)	Pass / Fail / Info	Limit (dBm)	Test Results (dBm)	Pass / Fail / Info	
Yes[2]	3	4357	871.40	-100			TBD			TBD			TBD			TBD			
		4408	881.60																
		4458	891.60																
	4	4357	871.40	-100			TBD			TBD			TBD			TBD			
		4408	881.60																
		4458	891.60																
No[3]	3	4357	871.40	-100			N/A			N/A			N/A			N/A			
		4408	881.60																
		4458	891.60																
	4	4357	871.40	-100			N/A			N/A			N/A			N/A			
		4408	881.60																
		4458	891.60																

Note 1: Primary Mechanical Mode refers to device configured in preferred mode per manufacturer instructions (typically means antenna extended, fold or portrait slide open, but depends on form factor).

Note 2: "Yes" applies if the device supports voice operation in the talking position against the head in any cellular radio mode.

Note 3: "No" would be applicable to data-centric devices that are not held up against the head, e.g., embedded laptop solutions.

TABLE B-52 UMTS 1900 MAXIMUM TIS LEVEL REQUIREMENTS FOR THE PRIMARY MECHANICAL MODE[1]

Reference OTA Test Plan Table 6-5																			
				FS			HL			HR			BHHL			BHHR			
Device Held Up to Head for Voice (Yes/No)	Device Power Class	Channel	RX Frequency (MHz)	Limit (dBm)	Test Results (dBm)	Pass / Fail / Info	Limit (dBm)	Test Results (dBm)	Pass / Fail / Info	Limit (dBm)	Test Results (dBm)	Pass / Fail / Info	Limit (dBm)	Test Results (dBm)	Pass / Fail / Info	Limit (dBm)	Test Results (dBm)	Pass / Fail / Info	
Yes[2]	3	9662	1932.40	-102			TBD			TBD			TBD			TBD			
		9800	1960.00																
		9938	1987.60																
	4	9662	1932.40	-102			TBD			TBD			TBD			TBD			
		9800	1960.00																
		9938	1987.60																
No[3]	3	9662	1932.40	-102			N/A			N/A			N/A			N/A			
		9800	1960.00																
		9938	1987.60																
	4	9662	1932.40	-102			N/A			N/A			N/A			N/A			
		9800	1960.00																
		9938	1987.60																

Note 1: Primary Mechanical Mode refers to device configured in preferred mode per manufacturer instructions (typically means antenna extended, fold or portrait slide open, but depends on form factor).

Note 2: "Yes" applies if the device supports voice operation in the talking position against the head in any cellular radio mode.

Note 3: "No" would be applicable to data-centric devices that are not held up against the head, e.g., embedded laptop solutions.

TABLE B-53 UMTS 2100/1700 MAXIMUM TIS LEVEL REQUIREMENTS FOR THE PRIMARY MECHANICAL MODE[1]

Reference OTA Test Plan Table 6-5																			
				FS			HL			HR			BHHL			BHHR			
Device Held Up to Head for Voice (Yes/No)	Device Power Class	Channel	RX Frequency (MHz)	Limit (dBm)	Test Results (dBm)	Pass / Fail / Info	Limit (dBm)	Test Results (dBm)	Pass / Fail / Info	Limit (dBm)	Test Results (dBm)	Pass / Fail / Info	Limit (dBm)	Test Results (dBm)	Pass / Fail / Info	Limit (dBm)	Test Results (dBm)	Pass / Fail / Info	
Yes[2]	3	1537	2112.40	-105			TBD			TBD			TBD			TBD			
		1638	2132.60																
		1738	2152.60																
	4	1537	2112.40	-105			TBD			TBD			TBD			TBD			
		1638	2132.60																
		1738	2152.60																
No[3]	3	1537	2112.40	-105			N/A			N/A			N/A			N/A			
		1638	2132.60																
		1738	2152.60																
	4	1537	2112.40	-105			N/A			N/A			N/A			N/A			
		1638	2132.60																
		1738	2152.60																

Note 1: Primary Mechanical Mode refers to device configured in preferred mode per manufacturer instructions (typically means antenna extended, fold or portrait slide open, but depends on form factor).

Note 2: "Yes" applies if the device supports voice operation in the talking position against the head in any cellular radio mode.

Note 3: "No" would be applicable to data-centric devices that are not held up against the head, e.g., embedded laptop solutions.

TABLE B-54 UMTS 850 MAXIMUM TIS AND BPD LEVEL REQUIREMENTS FOR THE PRIMARY MECHANICAL MODE[1]

Reference OTA Test Plan Table 6-5 and Table 6-12											
Device Held Up to Head for Voice (Yes/ No)	**Test Position**	**Channel**	**RX Frequency (MHz)**	**Primary antenna ("a"/"b")**	**Primary TIS (dBm)**	**Primary TIS Limit (dBm)**	**Pass / Fail / Info**	**Secondary TIS (dBm)**	**BPD (dB)**	**BPD Limit (dB)**	**Pass / Fail / Info**
Yes[2]	FS	4357	871.4			-100				TBD	
		4408	881.6							TBD	
		4458	891.6							TBD	
	HL	4357	871.4			TBD				TBD	
		4408	881.6							TBD	
		4458	891.6							TBD	
	HR	4357	871.4			TBD				TBD	
		4408	881.6							TBD	
		4458	891.6							TBD	
	BHHL	4357	871.4			TBD				TBD	
		4408	881.6							TBD	
		4458	891.6							TBD	
	BHHR	4357	871.4			TBD				TBD	
		4408	881.6							TBD	
		4458	891.6							TBD	
No[3]	FS	4357	871.4			-100				TBD	
		4408	881.6							TBD	
		4458	891.6							TBD	
Is antenna "a" dynamically activated (yes/no)?											
Is antenna "b" dynamically activated (yes/no)?											
Transmit antenna location ("a"/"b"/"other"):											

Note 1: Primary Mechanical Mode refers to device configured in preferred mode per manufacturer instructions (typically means antenna extended, fold or portrait slide open, but depends on form factor).

Note 2: "Yes" applies if the device supports voice operation in the talking position against the head in any cellular radio mode.

Note 3: "No" would be applicable to data-centric devices that are not held up against the head, e.g., embedded laptop solutions.

TABLE B-55 UMTS 1900 MAXIMUM TIS AND BPD LEVEL REQUIREMENTS FOR THE PRIMARY MECHANICAL MODE[1]

Reference OTA Test Plan Table 6-5 and Table 6-12											
Device Held Up to Head for Voice (Yes/ No)	**Test Position**	**Channel**	**RX Frequency (MHz)**	**Primary antenna ("a"/"b")**	**Primary TIS (dBm)**	**Primary TIS Limit (dBm)**	**Pass / Fail / Info**	**Secondary TIS (dBm)**	**BPD (dB)**	**BPD Limit (dB)**	**Pass / Fail / Info**
Yes[2]	FS	9662	1932.4			-102				TBD	
		9800	1960							TBD	
		9938	1876.6							TBD	
	HL	9662	1932.4			TBD				TBD	
		9800	1960							TBD	
		9938	1876.6							TBD	
	HR	9662	1932.4			TBD				TBD	
		9800	1960							TBD	
		9938	1876.6							TBD	
	BHHL	9662	1932.4			TBD				TBD	
		9800	1960							TBD	
		9938	1876.6							TBD	
	BHHR	9662	1932.4			TBD				TBD	
		9800	1960							TBD	
		9938	1876.6							TBD	
No[3]	FS	9662	1932.4			-102				TBD	
		9800	1960							TBD	
		9938	1876.6							TBD	
Is antenna "a" dynamically activated (yes/no)?											
Is antenna "b" dynamically activated (yes/no)?											
Transmit antenna location ("a"/"b"/"other"):											

Note 1: Primary Mechanical Mode refers to device configured in preferred mode per manufacturer instructions (typically means antenna extended, fold or portrait slide open, but depends on form factor).

Note 2: "Yes" applies if the device supports voice operation in the talking position against the head in any cellular radio mode.

Note 3: "No" would be applicable to data-centric devices that are not held up against the head, e.g., embedded laptop solutions.

TABLE B-56 UMTS 2100/1700 MAXIMUM TIS AND BPD LEVEL REQUIREMENTS FOR THE PRIMARY MECHANICAL MODE[1]

Reference OTA Test Plan Table 6-5 and Table 6-12											
Device Held Up to Head for Voice (Yes/ No)	**Test Position**	**Channel**	**RX Frequency (MHz)**	**Primary antenna ("a"/"b")**	**Primary TIS (dBm)**	**Primary TIS Limit (dBm)**	**Pass / Fail / Info**	**Secondary TIS (dBm)**	**BPD (dB)**	**BPD Limit (dB)**	**Pass / Fail / Info**
Yes[2]	FS	1537	2112.4			-105				TBD	
		1638	2132.6							TBD	
		1738	2152.6							TBD	
	HL	1537	2112.4			TBD				TBD	
		1638	2132.6							TBD	
		1738	2152.6							TBD	
	HR	1537	2112.4			TBD				TBD	
		1638	2132.6							TBD	
		1738	2152.6							TBD	
	BHHL	1537	2112.4			TBD				TBD	
		1638	2132.6							TBD	
		1738	2152.6							TBD	
	BHHR	1537	2112.4			TBD				TBD	
		1638	2132.6							TBD	
		1738	2152.6							TBD	
No[3]	FS	1537	2112.4			-105				TBD	
		1638	2132.6							TBD	
		1738	2152.6							TBD	
Is antenna "a" dynamically activated (yes/no)?											
Is antenna "b" dynamically activated (yes/no)?											
Transmit antenna location ("a"/"b"/"other"):											

Note 1: Primary Mechanical Mode refers to device configured in preferred mode per manufacturer instructions (typically means antenna extended, fold or portrait slide open, but depends on form factor).

Note 2: "Yes" applies if the device supports voice operation in the talking position against the head in any cellular radio mode.

Note 3: "No" would be applicable to data-centric devices that are not held up against the head, e.g., embedded laptop solutions.

TABLE B-57 LTE BAND 12 MINIMUM TRP LEVEL REQUIREMENTS FOR THE PRIMARY MECHANICAL MODE[1]

Reference OTA Test Plan Table 5-21																				
Device Held Up to Head for Voice (Yes/No)	Channel	UL RB Allocation	TX Frequency (MHz) [center of UL RB allocation]	FS			HL			HR			BHHL			BHHR		
				Limit (dBm)	Test Results (dBm)	Pass / Fail / Info	Limit (dBm)	Test Results (dBm)	Pass / Fail / Info	Limit (dBm)	Test Results (dBm)	Pass / Fail / Info	Limit (dBm)	Test Results (dBm)	Pass / Fail / Info	Limit (dBm)	Test Results (dBm)	Pass / Fail / Info
Yes[2]	23060	12 RB with RBstart=0	700.58	TBD			TBD			TBD			TBD			TBD		
	23095	12 RB with RBstart=19	707.5															
	23130	12 RB with RBstart=38	714.42															
No[3]	23060	12 RB with RBstart=0	700.58	TBD			N/A			N/A			N/A			N/A		
	23095	12 RB with RBstart=19	707.5															
	23130	12 RB with RBstart=38	714.42															

Note 1: Primary Mechanical Mode refers to device configured in preferred mode per manufacturer instructions (typically means antenna extended, fold or portrait slide open, but depends on form factor).

Note 2: "Yes" applies if the device supports voice operation in the talking position against the head in any cellular radio mode.

Note 3: "No" would be applicable to data-centric devices that are not held up against the head, e.g., embedded laptop solutions.

TABLE B-58 LTE BAND 17 MINIMUM TRP LEVEL REQUIREMENTS FOR THE PRIMARY MECHANICAL MODE[1]

Reference OTA Test Plan Table 5-21																				
Device Held Up to Head for Voice (Yes/No)	Channel	UL RB Allocation	TX Frequency (MHz) [center of UL RB allocation]	FS			HL			HR			BHHL			BHHR		
				Limit (dBm)	Test Results (dBm)	Pass / Fail / Info	Limit (dBm)	Test Results (dBm)	Pass / Fail / Info	Limit (dBm)	Test Results (dBm)	Pass / Fail / Info	Limit (dBm)	Test Results (dBm)	Pass / Fail / Info	Limit (dBm)	Test Results (dBm)	Pass / Fail / Info
Yes[2]	23780	12 RB with RBstart=0	705.58	TBD			TBD			TBD			TBD			TBD		
	23790	12 RB with RBstart=19	710															
	23800	12 RB with RBstart=38	714.42															
No[3]	23780	12 RB with RBstart=0	705.58	TBD			N/A			N/A			N/A			N/A		
	23790	12 RB with RBstart=19	710															
	23800	12 RB with RBstart=38	714.42															

Note 1: Primary Mechanical Mode refers to device configured in preferred mode per manufacturer instructions (typically means antenna extended, fold or portrait slide open, but depends on form factor).

Note 2: "Yes" applies if the device supports voice operation in the talking position against the head in any cellular radio mode.

Note 3: "No" would be applicable to data-centric devices that are not held up against the head, e.g., embedded laptop solutions.

TABLE B-59 LTE BAND 13 MINIMUM TRP LEVEL REQUIREMENTS FOR THE PRIMARY MECHANICAL MODE[1]

Reference OTA Test Plan Table 5-21																				
Device Held Up to Head for Voice (Yes/No)	Channel	UL RB Allocation	TX Frequency (MHz) [center of UL RB allocation]	FS			HL			HR			BHHL			BHHR		
				Limit (dBm)	Test Results (dBm)	Pass / Fail / Info	Limit (dBm)	Test Results (dBm)	Pass / Fail / Info	Limit (dBm)	Test Results (dBm)	Pass / Fail / Info	Limit (dBm)	Test Results (dBm)	Pass / Fail / Info	Limit (dBm)	Test Results (dBm)	Pass / Fail / Info
Yes[2]	23230	12 RB with RBstart=0	778.58	TBD			TBD			TBD			TBD			TBD		
	23230	12 RB with RBstart=19	782															
	23230	12 RB with RBstart=38	785.42															
No[3]	23230	12 RB with RBstart=0	778.58	TBD			N/A			N/A			N/A			N/A		
	23230	12 RB with RBstart=19	782															
	23230	12 RB with RBstart=38	785.42															

Note 1: Primary Mechanical Mode refers to device configured in preferred mode per manufacturer instructions (typically means antenna extended, fold or portrait slide open, but depends on form factor).

Note 2: "Yes" applies if the device supports voice operation in the talking position against the head in any cellular radio mode.

Note 3: "No" would be applicable to data-centric devices that are not held up against the head, e.g., embedded laptop solutions.

TABLE B-60 LTE BAND 14 MINIMUM TRP LEVEL REQUIREMENTS FOR THE PRIMARY MECHANICAL MODE[1]

Reference OTA Test Plan Table 5-21																			
				FS			HL			HR			BHHL			BHHR			
Device Held Up to Head for Voice (Yes/No)	Channel	UL RB Allocation	TX Frequency (MHz) [center of UL RB allocation]	Limit (dBm)	Test Results (dBm)	Pass / Fail / Info	Limit (dBm)	Test Results (dBm)	Pass / Fail / Info	Limit (dBm)	Test Results (dBm)	Pass / Fail / Info	Limit (dBm)	Test Results (dBm)	Pass / Fail / Info	Limit (dBm)	Test Results (dBm)	Pass / Fail / Info
Yes[2]	23330	12 RB with RBstart=0	789.58	TBD			TBD			TBD			TBD			TBD		
	23330	12 RB with RBstart=19	793															
	23330	12 RB with RBstart=38	796.42															
No[3]	23330	12 RB with RBstart=0	789.58	TBD			N/A			N/A			N/A			N/A		
	23330	12 RB with RBstart=19	793															
	23330	12 RB with RBstart=38	796.42															

Note 1: Primary Mechanical Mode refers to device configured in preferred mode per manufacturer instructions (typically means antenna extended, fold or portrait slide open, but depends on form factor).

Note 2: "Yes" applies if the device supports voice operation in the talking position against the head in any cellular radio mode.

Note 3: "No" would be applicable to data-centric devices that are not held up against the head, e.g., embedded laptop solutions.

TABLE B-61 LTE BAND 26 MINIMUM TRP LEVEL REQUIREMENTS FOR THE PRIMARY MECHANICAL MODE[1]

Reference OTA Test Plan Table 5-21																				
Device Held Up to Head for Voice (Yes/No)	Channel	UL RB Allocation	TX Frequency (MHz) [center of UL RB allocation]	FS			HL			HR			BHHL			BHHR		
				Limit (dBm)	Test Results (dBm)	Pass / Fail / Info	Limit (dBm)	Test Results (dBm)	Pass / Fail / Info	Limit (dBm)	Test Results (dBm)	Pass / Fail / Info	Limit (dBm)	Test Results (dBm)	Pass / Fail / Info	Limit (dBm)	Test Results (dBm)	Pass / Fail / Info
Yes[2]	26715	8 RB with RBstart=0	814.97	TBD			TBD			TBD			TBD			TBD		
	26865	8 RB with RBstart=8	831.41															
	27015	8 RB with RBstart=17	848.03															
No[3]	26715	8 RB with RBstart=0	814.97	TBD			N/A			N/A			N/A			N/A		
	26865	8 RB with RBstart=8	831.41															
	27015	8 RB with RBstart=17	848.03															

Note 1: Primary Mechanical Mode refers to device configured in preferred mode per manufacturer instructions (typically means antenna extended, fold or portrait slide open, but depends on form factor).

Note 2: "Yes" applies if the device supports voice operation in the talking position against the head in any cellular radio mode.

Note 3: "No" would be applicable to data-centric devices that are not held up against the head, e.g., embedded laptop solutions.

TABLE B-62 LTE BAND 5 MINIMUM TRP LEVEL REQUIREMENTS FOR THE PRIMARY MECHANICAL MODE[1]

Reference OTA Test Plan Table 5-21																				
Device Held Up to Head for Voice (Yes/No)	Channel	UL RB Allocation	TX Frequency (MHz) [center of UL RB allocation]	FS			HL			HR			BHHL			BHHR		
				Limit (dBm)	Test Results (dBm)	Pass / Fail / Info	Limit (dBm)	Test Results (dBm)	Pass / Fail / Info	Limit (dBm)	Test Results (dBm)	Pass / Fail / Info	Limit (dBm)	Test Results (dBm)	Pass / Fail / Info	Limit (dBm)	Test Results (dBm)	Pass / Fail / Info
Yes[2]	20450	12 RB with RBstart=0	825.58	TBD			TBD			TBD			TBD			TBD		
	20525	12 RB with RBstart=19	836.5															
	20600	12 RB with RBstart=38	847.42															
No[3]	20450	12 RB with RBstart=0	825.58	TBD			N/A			N/A			N/A			N/A		
	20525	12 RB with RBstart=19	836.5															
	20600	12 RB with RBstart=38	847.42															

Note 1: Primary Mechanical Mode refers to device configured in preferred mode per manufacturer instructions (typically means antenna extended, fold or portrait slide open, but depends on form factor).

Note 2: "Yes" applies if the device supports voice operation in the talking position against the head in any cellular radio mode.

Note 3: "No" would be applicable to data-centric devices that are not held up against the head, e.g., embedded laptop solutions.

TABLE B-63 LTE BAND 2 MINIMUM TRP LEVEL REQUIREMENTS FOR THE PRIMARY MECHANICAL MODE[1]

Reference OTA Test Plan Table 5-21																				
				FS			HL			HR			BHHL			BHHR				
Device Held Up to Head for Voice (Yes/No)	Channel	UL RB Allocation	TX Frequency (MHz) [center of UL RB allocation]	Limit (dBm)	Test Results (dBm)	Pass / Fail / Info	Limit (dBm)	Test Results (dBm)	Pass / Fail / Info	Limit (dBm)	Test Results (dBm)	Pass / Fail / Info	Limit (dBm)	Test Results (dBm)	Pass / Fail / Info	Limit (dBm)	Test Results (dBm)	Pass / Fail / Info			
Yes[2]	18650	12 RB with RBstart=0	1851.58	TBD			TBD			TBD			TBD			TBD				
	18900	12 RB with RBstart=19	1880																	
	19150	12 RB with RBstart=38	1908.42																	
No[3]	18650	12 RB with RBstart=0	1851.58	TBD			N/A			N/A			N/A			N/A				
	18900	12 RB with RBstart=19	1880																	
	19150	12 RB with RBstart=38	1908.42																	

Note 1: Primary Mechanical Mode refers to device configured in preferred mode per manufacturer instructions (typically means antenna extended, fold or portrait slide open, but depends on form factor).

Note 2: "Yes" applies if the device supports voice operation in the talking position against the head in any cellular radio mode.

Note 3: "No" would be applicable to data-centric devices that are not held up against the head, e.g., embedded laptop solutions.

TABLE B-64 LTE BAND 25 MINIMUM TRP LEVEL REQUIREMENTS FOR THE PRIMARY MECHANICAL MODE[1]

Reference OTA Test Plan Table 5-21																				
Device Held Up to Head for Voice (Yes/No)	Channel	UL RB Allocation	TX Frequency (MHz) [center of UL RB allocation]	FS			HL			HR			BHHL			BHHR		
				Limit (dBm)	Test Results (dBm)	Pass / Fail / Info	Limit (dBm)	Test Results (dBm)	Pass / Fail / Info	Limit (dBm)	Test Results (dBm)	Pass / Fail / Info	Limit (dBm)	Test Results (dBm)	Pass / Fail / Info	Limit (dBm)	Test Results (dBm)	Pass / Fail / Info
Yes[2]	26065	8 RB with RBstart=0	1850.97	TBD			TBD			TBD			TBD			TBD		
	26365	8 RB with RBstart=8	1882.41															
	26665	8 RB with RBstart=17	1914.03															
No[3]	26065	8 RB with RBstart=0	1850.97	TBD			N/A			N/A			N/A			N/A		
	26365	8 RB with RBstart=8	1882.41															
	26665	8 RB with RBstart=17	1914.03															

Note 1: Primary Mechanical Mode refers to device configured in preferred mode per manufacturer instructions (typically means antenna extended, fold or portrait slide open, but depends on form factor).

Note 2: "Yes" applies if the device supports voice operation in the talking position against the head in any cellular radio mode.

Note 3: "No" would be applicable to data-centric devices that are not held up against the head, e.g., embedded laptop solutions.

TABLE B-65 LTE BAND 4 MINIMUM TRP LEVEL REQUIREMENTS FOR THE PRIMARY MECHANICAL MODE[1]

Reference OTA Test Plan Table 5-21																				
Device Held Up to Head for Voice (Yes/No)	Channel	UL RB Allocation	TX Frequency (MHz) [center of UL RB allocation]	FS			HL			HR			BHHL			BHHR		
				Limit (dBm)	Test Results (dBm)	Pass / Fail / Info	Limit (dBm)	Test Results (dBm)	Pass / Fail / Info	Limit (dBm)	Test Results (dBm)	Pass / Fail / Info	Limit (dBm)	Test Results (dBm)	Pass / Fail / Info	Limit (dBm)	Test Results (dBm)	Pass / Fail / Info
Yes[2]	20000	12 RB with RBstart=0	1711.58	TBD			TBD			TBD			TBD			TBD		
	20175	12 RB with RBstart=19	1732.5															
	20350	12 RB with RBstart=38	1753.42															
No[3]	20000	12 RB with RBstart=0	1711.58	TBD			N/A			N/A			N/A			N/A		
	20175	12 RB with RBstart=19	1732.5															
	20350	12 RB with RBstart=38	1753.42															

Note 1: Primary Mechanical Mode refers to device configured in preferred mode per manufacturer instructions (typically means antenna extended, fold or portrait slide open, but depends on form factor).

Note 2: "Yes" applies if the device supports voice operation in the talking position against the head in any cellular radio mode.

Note 3: "No" would be applicable to data-centric devices that are not held up against the head, e.g., embedded laptop solutions.

TABLE B-66 LTE BAND 41 MINIMUM TRP LEVEL REQUIREMENTS FOR THE PRIMARY MECHANICAL MODE[1]

Reference OTA Test Plan Table 5-21																				
Device Held Up to Head for Voice (Yes/No)	Channel	UL RB Allocation	TX Frequency (MHz) [center of UL RB allocation]	FS			HL			HR			BHHL			BHHR		
				Limit (dBm)	Test Results (dBm)	Pass / Fail / Info	Limit (dBm)	Test Results (dBm)	Pass / Fail / Info	Limit (dBm)	Test Results (dBm)	Pass / Fail / Info	Limit (dBm)	Test Results (dBm)	Pass / Fail / Info	Limit (dBm)	Test Results (dBm)	Pass / Fail / Info
Yes[2]	39750	18RB with RB start = 0	2498.62	TBD			TBD			TBD			TBD			TBD		
	40620	18RB with RB start = 41	2593															
	41490	18RB with RB start = 82	2687.38															
No[3]	39750	18RB with RB start = 0	2498.62	TBD			N/A			N/A			N/A			N/A		
	40620	18RB with RB start = 41	2593															
	41490	18RB with RB start = 82	2687.38															

Note 1: Primary Mechanical Mode refers to device configured in preferred mode per manufacturer instructions (typically means antenna extended, fold or portrait slide open, but depends on form factor).

Note 2: "Yes" applies if the device supports voice operation in the talking position against the head in any cellular radio mode.

Note 3: "No" would be applicable to data-centric devices that are not held up against the head, e.g., embedded laptop solutions.

TABLE B-67 LTE BAND 12 MAXIMUM TIS LEVEL REQUIREMENTS FOR THE PRIMARY MECHANICAL MODE[1]

Reference OTA Test Plan Table 6-8																			
Device Held Up to Head for Voice (Yes/No)	Channel	DL RB Allocation	RX Frequency (MHz)	FS			HL			HR			BHHL			BHHR		
				Limit (dBm)	Test Results (dBm)	Pass / Fail / Info	Limit (dBm)	Test Results (dBm)	Pass / Fail / Info	Limit (dBm)	Test Results (dBm)	Pass / Fail / Info	Limit (dBm)	Test Results (dBm)	Pass / Fail / Info	Limit (dBm)	Test Results (dBm)	Pass / Fail / Info
Yes[2]	5060	50 RB with RBstart=0	734	TBD			TBD			TBD			TBD			TBD		
	5130	50 RB with RBstart=0	741															
No[3]	5060	50 RB with RBstart=0	734	TBD			N/A			N/A			N/A			N/A		
	5130	50 RB with RBstart=0	741															

Note 1: Primary Mechanical Mode refers to device configured in preferred mode per manufacturer instructions (typically means antenna extended, fold or portrait slide open, but depends on form factor).

Note 2: "Yes" applies if the device supports voice operation in the talking position against the head in any cellular radio mode.

Note 3: "No" would be applicable to data-centric devices that are not held up against the head, e.g., embedded laptop solutions.

TABLE B-68 LTE BAND 17 MAXIMUM TIS LEVEL REQUIREMENTS FOR THE PRIMARY MECHANICAL MODE[1]

Reference OTA Test Plan Table 6-8																			
Device Held Up to Head for Voice (Yes/No)	Channel	DL RB Allocation	RX Frequency (MHz)	FS			HL			HR			BHHL			BHHR		
				Limit (dBm)	Test Results (dBm)	Pass / Fail / Info	Limit (dBm)	Test Results (dBm)	Pass / Fail / Info	Limit (dBm)	Test Results (dBm)	Pass / Fail / Info	Limit (dBm)	Test Results (dBm)	Pass / Fail / Info	Limit (dBm)	Test Results (dBm)	Pass / Fail / Info
Yes[2]	5800	50 RB with RBstart=0	741	TBD			TBD			TBD			TBD			TBD		
No[3]	5800	50 RB with RBstart=0	741	TBD			N/A			N/A			N/A			N/A		

Note 1: Primary Mechanical Mode refers to device configured in preferred mode per manufacturer instructions (typically means antenna extended, fold or portrait slide open, but depends on form factor).

Note 2: "Yes" applies if the device supports voice operation in the talking position against the head in any cellular radio mode.

Note 3: "No" would be applicable to data-centric devices that are not held up against the head, e.g., embedded laptop solutions.

TABLE B-69 LTE BAND 13 MAXIMUM TIS LEVEL REQUIREMENTS FOR THE PRIMARY MECHANICAL MODE[1]

Reference OTA Test Plan Table 6-8																			
Device Held Up to Head for Voice (Yes/No)	Channel	DL RB Allocation	RX Frequency (MHz)	FS			HL			HR			BHHL			BHHR		
				Limit (dBm)	Test Results (dBm)	Pass / Fail / Info	Limit (dBm)	Test Results (dBm)	Pass / Fail / Info	Limit (dBm)	Test Results (dBm)	Pass / Fail / Info	Limit (dBm)	Test Results (dBm)	Pass / Fail / Info	Limit (dBm)	Test Results (dBm)	Pass / Fail / Info
Yes[2]	5230	50 RB with RBstart=0	751	TBD			TBD			TBD			TBD			TBD		
No[3]	5230	50 RB with RBstart=0	751	TBD			N/A			N/A			N/A			N/A		

Note 1: Primary Mechanical Mode refers to device configured in preferred mode per manufacturer instructions (typically means antenna extended, fold or portrait slide open, but depends on form factor).

Note 2: "Yes" applies if the device supports voice operation in the talking position against the head in any cellular radio mode.

Note 3: "No" would be applicable to data-centric devices that are not held up against the head, e.g., embedded laptop solutions.

TABLE B-70 LTE BAND 14 MAXIMUM TIS LEVEL REQUIREMENTS FOR THE PRIMARY MECHANICAL MODE[1]

Reference OTA Test Plan Table 6-8																			
Device Held Up to Head for Voice (Yes/No)	Channel	DL RB Allocation	RX Frequency (MHz)	FS			HL			HR			BHHL			BHHR		
				Limit (dBm)	Test Results (dBm)	Pass / Fail / Info	Limit (dBm)	Test Results (dBm)	Pass / Fail / Info	Limit (dBm)	Test Results (dBm)	Pass / Fail / Info	Limit (dBm)	Test Results (dBm)	Pass / Fail / Info	Limit (dBm)	Test Results (dBm)	Pass / Fail / Info
Yes[2]	5330	50 RB with RBstart=0	763	TBD			TBD			TBD			TBD			TBD		
No[3]	5330	50 RB with RBstart=0	763	TBD			N/A			N/A			N/A			N/A		

Note 1: Primary Mechanical Mode refers to device configured in preferred mode per manufacturer instructions (typically means antenna extended, fold or portrait slide open, but depends on form factor).

Note 2: "Yes" applies if the device supports voice operation in the talking position against the head in any cellular radio mode.

Note 3: "No" would be applicable to data-centric devices that are not held up against the head, e.g., embedded laptop solutions.

TABLE B-71 LTE BAND 26 MAXIMUM TIS LEVEL REQUIREMENTS FOR THE PRIMARY MECHANICAL MODE[1]

Reference OTA Test Plan Table 6-8																			
Device Held Up to Head for Voice (Yes/No)	Channel	DL RB Allocation	RX Frequency (MHz)	FS			HL			HR			BHHL			BHHR		
				Limit (dBm)	Test Results (dBm)	Pass / Fail / Info	Limit (dBm)	Test Results (dBm)	Pass / Fail / Info	Limit (dBm)	Test Results (dBm)	Pass / Fail / Info	Limit (dBm)	Test Results (dBm)	Pass / Fail / Info	Limit (dBm)	Test Results (dBm)	Pass / Fail / Info
Yes[2]	8715	25 RB with RBstart=0	861.5	TBD			TBD			TBD			TBD			TBD		
	8865	25 RB with RBstart=0	876.5															
	9015	25 RB with RBstart=0	891.5															

TABLE B-71 LTE BAND 26 MAXIMUM TIS LEVEL REQUIREMENTS FOR THE PRIMARY MECHANICAL MODE[1]

Reference OTA Test Plan Table 6-8																			
Device Held Up to Head for Voice (Yes/No)	Channel	DL RB Allocation	RX Frequency (MHz)	FS			HL			HR			BHHL			BHHR		
				Limit (dBm)	Test Results (dBm)	Pass / Fail / Info	Limit (dBm)	Test Results (dBm)	Pass / Fail / Info	Limit (dBm)	Test Results (dBm)	Pass / Fail / Info	Limit (dBm)	Test Results (dBm)	Pass / Fail / Info	Limit (dBm)	Test Results (dBm)	Pass / Fail / Info
No[3]	8715	25 RB with RBstart=0	861.5	TBD			N/A			N/A			N/A			N/A		
	8865	25 RB with RBstart=0	876.5															
	9015	25 RB with RBstart=0	891.5															

Note 1: Primary Mechanical Mode refers to device configured in preferred mode per manufacturer instructions (typically means antenna extended, fold or portrait slide open, but depends on form factor).

Note 2: "Yes" applies if the device supports voice operation in the talking position against the head in any cellular radio mode.

Note 3: "No" would be applicable to data-centric devices that are not held up against the head, e.g., embedded laptop solutions.

TABLE B-72 LTE BAND 5 MAXIMUM TIS LEVEL REQUIREMENTS FOR THE PRIMARY MECHANICAL MODE[1]

Reference OTA Test Plan Table 6-8																			
Device Held Up to Head for Voice (Yes/No)	Channel	DL RB Allocation	RX Frequency (MHz)	FS			HL			HR			BHHL			BHHR		
				Limit (dBm)	Test Results (dBm)	Pass / Fail / Info	Limit (dBm)	Test Results (dBm)	Pass / Fail / Info	Limit (dBm)	Test Results (dBm)	Pass / Fail / Info	Limit (dBm)	Test Results (dBm)	Pass / Fail / Info	Limit (dBm)	Test Results (dBm)	Pass / Fail / Info
Yes[2]	2450	50 RB with RBstart=0	874	TBD			TBD			TBD			TBD			TBD		
	2525	50 RB with RBstart=0	881.5															
	2600	50 RB with RBstart=0	889															
No[3]	2450	50 RB with RBstart=0	874	TBD			N/A			N/A			N/A			N/A		
	2525	50 RB with RBstart=0	881.5															
	2600	50 RB with RBstart=0	889															

Note 1: Primary Mechanical Mode refers to device configured in preferred mode per manufacturer instructions (typically means antenna extended, fold or portrait slide open, but depends on form factor).

Note 2: "Yes" applies if the device supports voice operation in the talking position against the head in any cellular radio mode.

Note 3: "No" would be applicable to data-centric devices that are not held up against the head, e.g., embedded laptop solutions.

TABLE B-73 LTE BAND 2 MAXIMUM TIS LEVEL REQUIREMENTS FOR THE PRIMARY MECHANICAL MODE[1]

Reference OTA Test Plan Table 6-8																			
				FS			HL			HR			BHHL			BHHR			
Device Held Up to Head for Voice (Yes/No)	Channel	DL RB Allocation	RX Frequency (MHz)	Limit (dBm)	Test Results (dBm)	Pass / Fail / Info	Limit (dBm)	Test Results (dBm)	Pass / Fail / Info	Limit (dBm)	Test Results (dBm)	Pass / Fail / Info	Limit (dBm)	Test Results (dBm)	Pass / Fail / Info	Limit (dBm)	Test Results (dBm)	Pass / Fail / Info	
Yes[2]	650	50 RB with RBstart=0	1935	TBD			TBD			TBD			TBD			TBD			
	900	50 RB with RBstart=0	1960																
	1150	50 RB with RBstart=0	1985																
No[3]	650	50 RB with RBstart=0	1935	TBD			N/A			N/A			N/A			N/A			
	900	50 RB with RBstart=0	1960																
	1150	50 RB with RBstart=0	1985																

Note 1: Primary Mechanical Mode refers to device configured in preferred mode per manufacturer instructions (typically means antenna extended, fold or portrait slide open, but depends on form factor).

Note 2: "Yes" applies if the device supports voice operation in the talking position against the head in any cellular radio mode.

Note 3: "No" would be applicable to data-centric devices that are not held up against the head, e.g., embedded laptop solutions.

TABLE B-74 LTE BAND 25 MAXIMUM TIS LEVEL REQUIREMENTS FOR THE PRIMARY MECHANICAL MODE[1]

Reference OTA Test Plan Table 6-8																				
Device Held Up to Head for Voice (Yes/No)	Channel	DL RB Allocation	RX Frequency (MHz)	FS			HL			HR			BHHL			BHHR		
				Limit (dBm)	Test Results (dBm)	Pass / Fail / Info	Limit (dBm)	Test Results (dBm)	Pass / Fail / Info	Limit (dBm)	Test Results (dBm)	Pass / Fail / Info	Limit (dBm)	Test Results (dBm)	Pass / Fail / Info	Limit (dBm)	Test Results (dBm)	Pass / Fail / Info
Yes[2]	8065	25 RB with RBstart=0	1932.5	TBD			TBD			TBD			TBD			TBD		
	8365	25 RB with RBstart=0	1962.5															
	8665	25 RB with RBstart=0	1992.5															
No[3]	8065	25 RB with RBstart=0	1932.5	TBD			N/A			N/A			N/A			N/A		
	8365	25 RB with RBstart=0	1962.5															
	8665	25 RB with RBstart=0	1992.5															

Note 1: Primary Mechanical Mode refers to device configured in preferred mode per manufacturer instructions (typically means antenna extended, fold or portrait slide open, but depends on form factor).

Note 2: "Yes" applies if the device supports voice operation in the talking position against the head in any cellular radio mode.

Note 3: "No" would be applicable to data-centric devices that are not held up against the head, e.g., embedded laptop solutions.

TABLE B-75 LTE BAND 4 MAXIMUM TIS LEVEL REQUIREMENTS FOR THE PRIMARY MECHANICAL MODE[1]

Reference OTA Test Plan Table 6-8																			
Device Held Up to Head for Voice (Yes/No)	Channel	DL RB Allocation	RX Frequency (MHz)	FS			HL			HR			BHHL			BHHR		
				Limit (dBm)	Test Results (dBm)	Pass / Fail / Info	Limit (dBm)	Test Results (dBm)	Pass / Fail / Info	Limit (dBm)	Test Results (dBm)	Pass / Fail / Info	Limit (dBm)	Test Results (dBm)	Pass / Fail / Info	Limit (dBm)	Test Results (dBm)	Pass / Fail / Info
Yes[2]	2000	50 RB with RBstart=0	2115	TBD			TBD			TBD			TBD			TBD		
	2175	50 RB with RBstart=0	2132.5															
	2350	50 RB with RBstart=0	2150															
No[3]	2000	50 RB with RBstart=0	2115	TBD			N/A			N/A			N/A			N/A		
	2175	50 RB with RBstart=0	2132.5															
	2350	50 RB with RBstart=0	2150															

Note 1: Primary Mechanical Mode refers to device configured in preferred mode per manufacturer instructions (typically means antenna extended, fold or portrait slide open, but depends on form factor).

Note 2: "Yes" applies if the device supports voice operation in the talking position against the head in any cellular radio mode.

Note 3: "No" would be applicable to data-centric devices that are not held up against the head, e.g., embedded laptop solutions.

TABLE B-76 LTE BAND 41 MAXIMUM TIS LEVEL REQUIREMENTS FOR THE PRIMARY MECHANICAL MODE[1]

Reference OTA Test Plan Table 6-8																			
Device Held Up to Head for Voice (Yes/No)	Channel	DL RB Allocation	RX Frequency (MHz)	FS			HL			HR			BHHL			BHHR		
				Limit (dBm)	Test Results (dBm)	Pass / Fail / Info	Limit (dBm)	Test Results (dBm)	Pass / Fail / Info	Limit (dBm)	Test Results (dBm)	Pass / Fail / Info	Limit (dBm)	Test Results (dBm)	Pass / Fail / Info	Limit (dBm)	Test Results (dBm)	Pass / Fail / Info
Yes[2]	39750	100RB with RB start = 0	2506	TBD			TBD			TBD			TBD			TBD		
	40620	100RB with RB start = 0	2593															
	41490	100RB with RB start = 0	2680															
No[3]	39750	100RB with RB start = 0	2506	TBD			N/A			N/A			N/A			N/A		
	40620	100RB with RB start = 0	2593															
	41490	100RB with RB start = 0	2680															

Note 1: Primary Mechanical Mode refers to device configured in preferred mode per manufacturer instructions (typically means antenna extended, fold or portrait slide open, but depends on form factor).

Note 2: "Yes" applies if the device supports voice operation in the talking position against the head in any cellular radio mode.

Note 3: "No" would be applicable to data-centric devices that are not held up against the head, e.g., embedded laptop solutions.

TABLE B-77 LTE BAND 12 MAXIMUM TIS AND BPD LEVEL REQUIREMENTS FOR THE PRIMARY MECHANICAL MODE[1]

Reference OTA Test Plan Table 6-8														
Device Held Up to Head for Voice (Yes/ No)	**Test Position**	**Channel**	**DL RB Allocation**	**RX Frequency (MHz)**	**Receiver Associated with Primary Antenna ("a"/"b")**	**Primary Antenna TIS (dBm)**	**Primary Antenna TIS Limit (dBm)**	**Pass / Fail / Info**	**Secondary Antenna TIS (dBm)**	**Secondary Antenna TIS Limit (dBm)**	**Pass / Fail / Info**	**BPD (dB)**	**BPD Limit (dB)**	**Pass / Fail / Info**
Yes[2]	FS	5060	50 RB with RBstart=0	734			TBD			TBD			TBD	
		5130	50 RB with RBstart=0	741			TBD			TBD			TBD	
	HL	5060	50 RB with RBstart=0	734			TBD			TBD			TBD	
		5130	50 RB with RBstart=0	741			TBD			TBD			TBD	
	HR	5060	50 RB with RBstart=0	734			TBD			TBD			TBD	
		5130	50 RB with RBstart=0	741			TBD			TBD			TBD	
	BHHL	5060	50 RB with RBstart=0	734			TBD			TBD			TBD	
		5130	50 RB with RBstart=0	741			TBD			TBD			TBD	
	BHHR	5060	50 RB with RBstart=0	734			TBD			TBD			TBD	
		5130	50 RB with RBstart=0	741			TBD			TBD			TBD	
No[3]	FS	5060	50 RB with RBstart=0	734			TBD			TBD			TBD	
		5130	50 RB with RBstart=0	741			TBD			TBD			TBD	
Is antenna "a" dynamically activated (yes/no)?														
Is antenna "b" dynamically activated (yes/no)?														
Transmit antenna location ("a"/"b"/"other"):														

Note 1: Primary Mechanical Mode refers to device configured in preferred mode per manufacturer instructions (typically means antenna extended, fold or portrait slide open, but depends on form factor).

Note 2: "Yes" applies if the device supports voice operation in the talking position against the head in any cellular radio mode.

Note 3: "No" would be applicable to data-centric devices that are not held up against the head, e.g., embedded laptop solutions.

TABLE B-78 LTE BAND 17 MAXIMUM TIS AND BPD LEVEL REQUIREMENTS FOR THE PRIMARY MECHANICAL MODE[1]

Reference OTA Test Plan Table 6-8														
Device Held Up to Head for Voice (Yes/ No)	**Test Position**	**Channel**	**DL RB Allocation**	**RX Frequency (MHz)**	**Receiver Associated with Primary Antenna ("a"/"b")**	**Primary Antenna TIS (dBm)**	**Primary Antenna TIS Limit (dBm)**	**Pass / Fail / Info**	**Secondary Antenna TIS (dBm)**	**Secondary Antenna TIS Limit (dBm)**	**Pass / Fail / Info**	**BPD (dB)**	**BPD Limit (dB)**	**Pass / Fail / Info**
Yes[2]	FS	5800	50 RB with RBstart=0	741			TBD			TBD			TBD	
	HL	5800	50 RB with RBstart=0	741			TBD			TBD			TBD	
	HR	5800	50 RB with RBstart=0	741			TBD			TBD			TBD	
	BHHL	5800	50 RB with RBstart=0	741			TBD			TBD			TBD	
	BHHR	5800	50 RB with RBstart=0	741			TBD			TBD			TBD	
No[3]	FS	5800	50 RB with RBstart=0	741			TBD			TBD			TBD	
Is antenna "a" dynamically activated (yes/no)?														
Is antenna "b" dynamically activated (yes/no)?														
Transmit antenna location ("a"/"b"/"other"):														

Note 1: Primary Mechanical Mode refers to device configured in preferred mode per manufacturer instructions (typically means antenna extended, fold or portrait slide open, but depends on form factor).

Note 2: "Yes" applies if the device supports voice operation in the talking position against the head in any cellular radio mode.

Note 3: "No" would be applicable to data-centric devices that are not held up against the head, e.g., embedded laptop solutions.

TABLE B-79 LTE BAND 13 MAXIMUM TIS AND BPD LEVEL REQUIREMENTS FOR THE PRIMARY MECHANICAL MODE[1]

Reference OTA Test Plan Table 6-8														
Device Held Up to Head for Voice (Yes/ No)	**Test Position**	**Channel**	**DL RB Allocation**	**RX Frequency (MHz)**	**Receiver Associated with Primary Antenna ("a"/"b")**	**Primary Antenna TIS (dBm)**	**Primary Antenna TIS Limit (dBm)**	**Pass / Fail / Info**	**Secondary Antenna TIS (dBm)**	**Secondary Antenna TIS Limit (dBm)**	**Pass / Fail / Info**	**BPD (dB)**	**BPD Limit (dB)**	**Pass / Fail / Info**
Yes[2]	FS	5230	50 RB with RBstart=0	751			TBD			TBD			TBD	
	HL	5230	50 RB with RBstart=0	751			TBD			TBD			TBD	
	HR	5230	50 RB with RBstart=0	751			TBD			TBD			TBD	
	BHHL	5230	50 RB with RBstart=0	751			TBD			TBD			TBD	
	BHHR	5230	50 RB with RBstart=0	751			TBD			TBD			TBD	
No[3]	FS	5230	50 RB with RBstart=0	751			TBD			TBD			TBD	
Is antenna "a" dynamically activated (yes/no)?														
Is antenna "b" dynamically activated (yes/no)?														
Transmit antenna location ("a"/"b"/"other"):														

Note 1: Primary Mechanical Mode refers to device configured in preferred mode per manufacturer instructions (typically means antenna extended, fold or portrait slide open, but depends on form factor).

Note 2: "Yes" applies if the device supports voice operation in the talking position against the head in any cellular radio mode.

Note 3: "No" would be applicable to data-centric devices that are not held up against the head, e.g., embedded laptop solutions.

TABLE B-80 LTE BAND 14 MAXIMUM TIS AND BPD LEVEL REQUIREMENTS FOR THE PRIMARY MECHANICAL MODE[1]

Reference OTA Test Plan Table 6-8														
Device Held Up to Head for Voice (Yes/ No)	**Test Position**	**Channel**	**DL RB Allocation**	**RX Frequency (MHz)**	**Receiver Associated with Primary Antenna ("a"/"b")**	**Primary Antenna TIS (dBm)**	**Primary Antenna TIS Limit (dBm)**	**Pass / Fail / Info**	**Secondary Antenna TIS (dBm)**	**Secondary Antenna TIS Limit (dBm)**	**Pass / Fail / Info**	**BPD (dB)**	**BPD Limit (dB)**	**Pass / Fail / Info**
Yes[2]	FS	5330	50 RB with RBstart=0	763			TBD			TBD			TBD	
	HL	5330	50 RB with RBstart=0	763			TBD			TBD			TBD	
	HR	5330	50 RB with RBstart=0	763			TBD			TBD			TBD	
	BHHL	5330	50 RB with RBstart=0	763			TBD			TBD			TBD	
	BHHR	5330	50 RB with RBstart=0	763			TBD			TBD			TBD	
No[3]	FS	5330	50 RB with RBstart=0	763			TBD			TBD			TBD	
Is antenna "a" dynamically activated (yes/no)?														
Is antenna "b" dynamically activated (yes/no)?														
Transmit antenna location ("a"/"b"/"other"):														

Note 1: Primary Mechanical Mode refers to device configured in preferred mode per manufacturer instructions (typically means antenna extended, fold or portrait slide open, but depends on form factor).

Note 2: "Yes" applies if the device supports voice operation in the talking position against the head in any cellular radio mode.

Note 3: "No" would be applicable to data-centric devices that are not held up against the head, e.g., embedded laptop solutions.

TABLE B-81 LTE BAND 26 MAXIMUM TIS AND BPD LEVEL REQUIREMENTS FOR THE PRIMARY MECHANICAL MODE[1]

Reference OTA Test Plan Table 6-8													
Device Held Up to Head for Voice (Yes/ No)	**Test Position**	**Channel**	**DL RB Allocation**	**RX Frequency (MHz)**	**Receiver Associated with Primary Antenna ("a"/"b")**	**Primary Antenna TIS (dBm)**	**Primary Antenna TIS Limit (dBm)**	**Pass / Fail / Info**	**Secondary Antenna TIS (dBm)**	**Secondary Antenna TIS Limit (dBm)**	**Pass / Fail / Info**	**BPD (dB)**	**BPD Limit (dB)**	**Pass / Fail / Info**
Yes[2]	FS	8715	25 RB with RBstart=0	861.5			TBD			TBD			TBD	
		8865	25 RB with RBstart=0	876.5			TBD			TBD			TBD	
		9015	25 RB with RBstart=0	891.5			TBD			TBD			TBD	
	HL	8715	25 RB with RBstart=0	861.5			TBD			TBD			TBD	
		8865	25 RB with RBstart=0	876.5			TBD			TBD			TBD	
		9015	25 RB with RBstart=0	891.5			TBD			TBD			TBD	
	HR	8715	25 RB with RBstart=0	861.5			TBD			TBD			TBD	
		8865	25 RB with RBstart=0	876.5			TBD			TBD			TBD	
		9015	25 RB with RBstart=0	891.5			TBD			TBD			TBD	
	BHHL	8715	25 RB with RBstart=0	861.5			TBD			TBD			TBD	
		8865	25 RB with RBstart=0	876.5			TBD			TBD			TBD	
		9015	25 RB with RBstart=0	891.5			TBD			TBD			TBD	
	BHHR	8715	25 RB with RBstart=0	861.5			TBD			TBD			TBD	
		8865	25 RB with RBstart=0	876.5			TBD			TBD			TBD	
		9015	25 RB with RBstart=0	891.5			TBD			TBD			TBD	

TABLE B-81 LTE BAND 26 MAXIMUM TIS AND BPD LEVEL REQUIREMENTS FOR THE PRIMARY MECHANICAL MODE[1]

Reference OTA Test Plan Table 6-8														
Device Held Up to Head for Voice (Yes/ No)	**Test Position**	**Channel**	**DL RB Allocation**	**RX Frequency (MHz)**	**Receiver Associated with Primary Antenna ("a"/"b")**	**Primary Antenna TIS (dBm)**	**Primary Antenna TIS Limit (dBm)**	**Pass / Fail / Info**	**Secondary Antenna TIS (dBm)**	**Secondary Antenna TIS Limit (dBm)**	**Pass / Fail / Info**	**BPD (dB)**	**BPD Limit (dB)**	**Pass / Fail / Info**
No[3]	FS	8715	25 RB with RBstart=0	861.5			TBD			TBD			TBD	
		8865	25 RB with RBstart=0	876.5			TBD			TBD			TBD	
		9015	25 RB with RBstart=0	891.5			TBD			TBD			TBD	
Is antenna "a" dynamically activated (yes/no)?														
Is antenna "b" dynamically activated (yes/no)?														
Transmit antenna location ("a"/"b"/"other"):														

Note 1: Primary Mechanical Mode refers to device configured in preferred mode per manufacturer instructions (typically means antenna extended, fold or portrait slide open, but depends on form factor).

Note 2: "Yes" applies if the device supports voice operation in the talking position against the head in any cellular radio mode.

Note 3: "No" would be applicable to data-centric devices that are not held up against the head, e.g., embedded laptop solutions.

TABLE B-82 LTE BAND 5 MAXIMUM TIS AND BPD LEVEL REQUIREMENTS FOR THE PRIMARY MECHANICAL MODE[1]

Reference OTA Test Plan Table 6-8													
Device Held Up to Head for Voice (Yes/ No)	**Test Position**	**Channel**	**DL RB Allocation**	**RX Frequency (MHz)**	**Receiver Associated with Primary Antenna ("a"/"b")**	**Primary Antenna TIS (dBm)**	**Primary Antenna TIS Limit (dBm)**	**Pass / Fail / Info**	**Secondary Antenna TIS (dBm)**	**Secondary Antenna TIS Limit (dBm)**	**Pass / Fail / Info**	**BPD (dB)**	**BPD Limit (dB)**	**Pass / Fail / Info**
Yes[2]	FS	2450	50 RB with RBstart=0	874			TBD			TBD			TBD	
		2525	50 RB with RBstart=0	881.5			TBD			TBD			TBD	
		2600	50 RB with RBstart=0	889			TBD			TBD			TBD	
	HL	2450	50 RB with RBstart=0	874			TBD			TBD			TBD	
		2525	50 RB with RBstart=0	881.5			TBD			TBD			TBD	
		2600	50 RB with RBstart=0	889			TBD			TBD			TBD	
	HR	2450	50 RB with RBstart=0	874			TBD			TBD			TBD	
		2525	50 RB with RBstart=0	881.5			TBD			TBD			TBD	
		2600	50 RB with RBstart=0	889			TBD			TBD			TBD	
	BHHL	2450	50 RB with RBstart=0	874			TBD			TBD			TBD	
		2525	50 RB with RBstart=0	881.5			TBD			TBD			TBD	
		2600	50 RB with RBstart=0	889			TBD			TBD			TBD	
	BHHR	2450	50 RB with RBstart=0	874			TBD			TBD			TBD	
		2525	50 RB with RBstart=0	881.5			TBD			TBD			TBD	
		2600	50 RB with RBstart=0	889			TBD			TBD			TBD	

TABLE B-82 LTE BAND 5 MAXIMUM TIS AND BPD LEVEL REQUIREMENTS FOR THE PRIMARY MECHANICAL MODE[1]

Reference OTA Test Plan Table 6-8														
Device Held Up to Head for Voice (Yes/ No)	**Test Position**	**Channel**	**DL RB Allocation**	**RX Frequency (MHz)**	**Receiver Associated with Primary Antenna ("a"/"b")**	**Primary Antenna TIS (dBm)**	**Primary Antenna TIS Limit (dBm)**	**Pass / Fail / Info**	**Secondary Antenna TIS (dBm)**	**Secondary Antenna TIS Limit (dBm)**	**Pass / Fail / Info**	**BPD (dB)**	**BPD Limit (dB)**	**Pass / Fail / Info**
No[3]	FS	2450	50 RB with RBstart=0	874			TBD			TBD			TBD	
		2525	50 RB with RBstart=0	881.5			TBD			TBD			TBD	
		2600	50 RB with RBstart=0	889			TBD			TBD			TBD	
Is antenna "a" dynamically activated (yes/no)?														
Is antenna "b" dynamically activated (yes/no)?														
Transmit antenna location ("a"/"b"/"other"):														

Note 1: Primary Mechanical Mode refers to device configured in preferred mode per manufacturer instructions (typically means antenna extended, fold or portrait slide open, but depends on form factor).

Note 2: "Yes" applies if the device supports voice operation in the talking position against the head in any cellular radio mode.

Note 3: "No" would be applicable to data-centric devices that are not held up against the head, e.g., embedded laptop solutions.

TABLE B-83 LTE BAND 2 MAXIMUM TIS AND BPD LEVEL REQUIREMENTS FOR THE PRIMARY MECHANICAL MODE[1]

Reference OTA Test Plan Table 6-8													
Device Held Up to Head for Voice (Yes/ No)	**Test Position**	**Channel**	**DL RB Allocation**	**RX Frequency (MHz)**	**Receiver Associated with Primary Antenna ("a"/"b")**	**Primary Antenna TIS (dBm)**	**Primary Antenna TIS Limit (dBm)**	**Pass / Fail / Info**	**Secondary Antenna TIS (dBm)**	**Secondary Antenna TIS Limit (dBm)**	**Pass / Fail / Info**	**BPD (dB)**	**BPD Limit (dB)**	**Pass / Fail / Info**
Yes[2]	FS	650	50 RB with RBstart=0	1935			TBD			TBD			TBD	
		900	50 RB with RBstart=0	1960			TBD			TBD			TBD	
		1150	50 RB with RBstart=0	1985			TBD			TBD			TBD	
	HL	650	50 RB with RBstart=0	1935			TBD			TBD			TBD	
		900	50 RB with RBstart=0	1960			TBD			TBD			TBD	
		1150	50 RB with RBstart=0	1985			TBD			TBD			TBD	
	HR	650	50 RB with RBstart=0	1935			TBD			TBD			TBD	
		900	50 RB with RBstart=0	1960			TBD			TBD			TBD	
		1150	50 RB with RBstart=0	1985			TBD			TBD			TBD	
	BHHL	650	50 RB with RBstart=0	1935			TBD			TBD			TBD	
		900	50 RB with RBstart=0	1960			TBD			TBD			TBD	
		1150	50 RB with RBstart=0	1985			TBD			TBD			TBD	
	BHHR	650	50 RB with RBstart=0	1935			TBD			TBD			TBD	
		900	50 RB with RBstart=0	1960			TBD			TBD			TBD	
		1150	50 RB with RBstart=0	1985			TBD			TBD			TBD	

TABLE B-83 LTE BAND 2 MAXIMUM TIS AND BPD LEVEL REQUIREMENTS FOR THE PRIMARY MECHANICAL MODE[1]

Reference OTA Test Plan Table 6-8														
Device Held Up to Head for Voice (Yes/ No)	**Test Position**	**Channel**	**DL RB Allocation**	**RX Frequency (MHz)**	**Receiver Associated with Primary Antenna ("a"/"b")**	**Primary Antenna TIS (dBm)**	**Primary Antenna TIS Limit (dBm)**	**Pass / Fail / Info**	**Secondary Antenna TIS (dBm)**	**Secondary Antenna TIS Limit (dBm)**	**Pass / Fail / Info**	**BPD (dB)**	**BPD Limit (dB)**	**Pass / Fail / Info**
No[3]	FS	650	50 RB with RBstart=0	1935			TBD			TBD			TBD	
		900	50 RB with RBstart=0	1960			TBD			TBD			TBD	
		1150	50 RB with RBstart=0	1985			TBD			TBD			TBD	
Is antenna "a" dynamically activated (yes/no)?														
Is antenna "b" dynamically activated (yes/no)?														
Transmit antenna location ("a"/"b"/"other"):														

Note 1: Primary Mechanical Mode refers to device configured in preferred mode per manufacturer instructions (typically means antenna extended, fold or portrait slide open, but depends on form factor).

Note 2: "Yes" applies if the device supports voice operation in the talking position against the head in any cellular radio mode.

Note 3: "No" would be applicable to data-centric devices that are not held up against the head, e.g., embedded laptop solutions.

TABLE B-84 LTE BAND 25 MAXIMUM TIS AND BPD LEVEL REQUIREMENTS FOR THE PRIMARY MECHANICAL MODE[1]

Reference OTA Test Plan Table 6-8														
Device Held Up to Head for Voice (Yes/ No)	**Test Position**	**Channel**	**DL RB Allocation**	**RX Frequency (MHz)**	**Receiver Associated with Primary Antenna ("a"/"b")**	**Primary Antenna TIS (dBm)**	**Primary Antenna TIS Limit (dBm)**	**Pass / Fail / Info**	**Secondary Antenna TIS (dBm)**	**Secondary Antenna TIS Limit (dBm)**	**Pass / Fail / Info**	**BPD (dB)**	**BPD Limit (dB)**	**Pass / Fail / Info**
Yes[2]	FS	8065	25 RB with RBstart=0	1932.5			TBD			TBD			TBD	
		8365	25 RB with RBstart=0	1962.5			TBD			TBD			TBD	
		8665	25 RB with RBstart=0	1992.5			TBD			TBD			TBD	
	HL	8065	25 RB with RBstart=0	1932.5			TBD			TBD			TBD	
		8365	25 RB with RBstart=0	1962.5			TBD			TBD			TBD	
		8665	25 RB with RBstart=0	1992.5			TBD			TBD			TBD	
	HR	8065	25 RB with RBstart=0	1932.5			TBD			TBD			TBD	
		8365	25 RB with RBstart=0	1962.5			TBD			TBD			TBD	
		8665	25 RB with RBstart=0	1992.5			TBD			TBD			TBD	
	BHHL	8065	25 RB with RBstart=0	1932.5			TBD			TBD			TBD	
		8365	25 RB with RBstart=0	1962.5			TBD			TBD			TBD	
		8665	25 RB with RBstart=0	1992.5			TBD			TBD			TBD	
	BHHR	8065	25 RB with RBstart=0	1932.5			TBD			TBD			TBD	
		8365	25 RB with RBstart=0	1962.5			TBD			TBD			TBD	
		8665	25 RB with RBstart=0	1992.5			TBD			TBD			TBD	

TABLE B-84 LTE BAND 25 MAXIMUM TIS AND BPD LEVEL REQUIREMENTS FOR THE PRIMARY MECHANICAL MODE[1]

Reference OTA Test Plan Table 6-8														
Device Held Up to Head for Voice (Yes/ No)	**Test Position**	**Channel**	**DL RB Allocation**	**RX Frequency (MHz)**	**Receiver Associated with Primary Antenna ("a"/"b")**	**Primary Antenna TIS (dBm)**	**Primary Antenna TIS Limit (dBm)**	**Pass / Fail / Info**	**Secondary Antenna TIS (dBm)**	**Secondary Antenna TIS Limit (dBm)**	**Pass / Fail / Info**	**BPD (dB)**	**BPD Limit (dB)**	**Pass / Fail / Info**
No[3]	FS	8065	25 RB with RBstart=0	1932.5			TBD			TBD			TBD	
		8365	25 RB with RBstart=0	1962.5			TBD			TBD			TBD	
		8665	25 RB with RBstart=0	1992.5			TBD			TBD			TBD	
Is antenna "a" dynamically activated (yes/no)?														
Is antenna "b" dynamically activated (yes/no)?														
Transmit antenna location ("a"/"b"/"other"):														

Note 1: Primary Mechanical Mode refers to device configured in preferred mode per manufacturer instructions (typically means antenna extended, fold or portrait slide open, but depends on form factor).

Note 2: "Yes" applies if the device supports voice operation in the talking position against the head in any cellular radio mode.

Note 3: "No" would be applicable to data-centric devices that are not held up against the head, e.g., embedded laptop solutions.

TABLE B-85 LTE BAND 4 MAXIMUM TIS AND BPD LEVEL REQUIREMENTS FOR THE PRIMARY MECHANICAL MODE[1]

Reference OTA Test Plan Table 6-8														
Device Held Up to Head for Voice (Yes/ No)	**Test Position**	**Channel**	**DL RB Allocation**	**RX Frequency (MHz)**	**Receiver Associated with Primary Antenna ("a"/"b")**	**Primary Antenna TIS (dBm)**	**Primary Antenna TIS Limit (dBm)**	**Pass / Fail / Info**	**Secondary Antenna TIS (dBm)**	**Secondary Antenna TIS Limit (dBm)**	**Pass / Fail / Info**	**BPD (dB)**	**BPD Limit (dB)**	**Pass / Fail / Info**
Yes[2]	FS	2000	50 RB with RBstart=0	2115			TBD			TBD			TBD	
		2175	50 RB with RBstart=0	2132.5			TBD			TBD			TBD	
		2350	50 RB with RBstart=0	2150			TBD			TBD			TBD	
	HL	2000	50 RB with RBstart=0	2115			TBD			TBD			TBD	
		2175	50 RB with RBstart=0	2132.5			TBD			TBD			TBD	
		2350	50 RB with RBstart=0	2150			TBD			TBD			TBD	
	HR	2000	50 RB with RBstart=0	2115			TBD			TBD			TBD	
		2175	50 RB with RBstart=0	2132.5			TBD			TBD			TBD	
		2350	50 RB with RBstart=0	2150			TBD			TBD			TBD	
	BHHL	2000	50 RB with RBstart=0	2115			TBD			TBD			TBD	
		2175	50 RB with RBstart=0	2132.5			TBD			TBD			TBD	
		2350	50 RB with RBstart=0	2150			TBD			TBD			TBD	
	BHHR	2000	50 RB with RBstart=0	2115			TBD			TBD			TBD	
		2175	50 RB with RBstart=0	2132.5			TBD			TBD			TBD	
		2350	50 RB with RBstart=0	2150			TBD			TBD			TBD	

TABLE B-85 LTE BAND 4 MAXIMUM TIS AND BPD LEVEL REQUIREMENTS FOR THE PRIMARY MECHANICAL MODE[1]

Reference OTA Test Plan Table 6-8														
Device Held Up to Head for Voice (Yes/ No)	**Test Position**	**Channel**	**DL RB Allocation**	**RX Frequency (MHz)**	**Receiver Associated with Primary Antenna ("a"/"b")**	**Primary Antenna TIS (dBm)**	**Primary Antenna TIS Limit (dBm)**	**Pass / Fail / Info**	**Secondary Antenna TIS (dBm)**	**Secondary Antenna TIS Limit (dBm)**	**Pass / Fail / Info**	**BPD (dB)**	**BPD Limit (dB)**	**Pass / Fail / Info**
No[3]	FS	2000	50 RB with RBstart=0	2115			TBD			TBD			TBD	
		2175	50 RB with RBstart=0	2132.5			TBD			TBD			TBD	
		2350	50 RB with RBstart=0	2150			TBD			TBD			TBD	
Is antenna "a" dynamically activated (yes/no)?														
Is antenna "b" dynamically activated (yes/no)?														
Transmit antenna location ("a"/"b"/"other"):														

Note 1: Primary Mechanical Mode refers to device configured in preferred mode per manufacturer instructions (typically means antenna extended, fold or portrait slide open, but depends on form factor).

Note 2: "Yes" applies if the device supports voice operation in the talking position against the head in any cellular radio mode.

Note 3: "No" would be applicable to data-centric devices that are not held up against the head, e.g., embedded laptop solutions.

TABLE B-86 LTE BAND 41 MAXIMUM TIS AND BPD LEVEL REQUIREMENTS FOR THE PRIMARY MECHANICAL MODE[1]

Reference OTA Test Plan Table 6-8														
Device Held Up to Head for Voice (Yes/ No)	**Test Position**	**Channel**	**DL RB Allocation**	**RX Frequency (MHz)**	**Receiver Associated with Primary Antenna ("a"/"b")**	**Primary Antenna TIS (dBm)**	**Primary Antenna TIS Limit (dBm)**	**Pass / Fail / Info**	**Secondary Antenna TIS (dBm)**	**Secondary Antenna TIS Limit (dBm)**	**Pass / Fail / Info**	**BPD (dB)**	**BPD Limit (dB)**	**Pass / Fail / Info**
Yes[2]	FS	39750	100 RB with RBstart=0	2506			TBD			TBD			TBD	
		40620	100 RB with RBstart=0	2593			TBD			TBD			TBD	
		41490	100 RB with RBstart=0	2680			TBD			TBD			TBD	
	HL	39750	100 RB with RBstart=0	2506			TBD			TBD			TBD	
		40620	100 RB with RBstart=0	2593			TBD			TBD			TBD	
		41490	100 RB with RBstart=0	2680			TBD			TBD			TBD	
	HR	39750	100 RB with RBstart=0	2506			TBD			TBD			TBD	
		40620	100 RB with RBstart=0	2593			TBD			TBD			TBD	
		41490	100 RB with RBstart=0	2680			TBD			TBD			TBD	
	BHHL	39750	100 RB with RBstart=0	2506			TBD			TBD			TBD	
		40620	100 RB with RBstart=0	2593			TBD			TBD			TBD	
		41490	100 RB with RBstart=0	2680			TBD			TBD			TBD	
	BHHR	39750	100 RB with RBstart=0	2506			TBD			TBD			TBD	
		40620	100 RB with RBstart=0	2593			TBD			TBD			TBD	
		41490	100 RB with RBstart=0	2680			TBD			TBD			TBD	

TABLE B-86 LTE BAND 41 MAXIMUM TIS AND BPD LEVEL REQUIREMENTS FOR THE PRIMARY MECHANICAL MODE[1]

Reference OTA Test Plan Table 6-8														
Device Held Up to Head for Voice (Yes/ No)	**Test Position**	**Channel**	**DL RB Allocation**	**RX Frequency (MHz)**	**Receiver Associated with Primary Antenna ("a"/"b")**	**Primary Antenna TIS (dBm)**	**Primary Antenna TIS Limit (dBm)**	**Pass / Fail / Info**	**Secondary Antenna TIS (dBm)**	**Secondary Antenna TIS Limit (dBm)**	**Pass / Fail / Info**	**BPD (dB)**	**BPD Limit (dB)**	**Pass / Fail / Info**
No[3]	FS	39750	100 RB with RBstart=0	2506			TBD			TBD			TBD	
		40620	100 RB with RBstart=0	2593			TBD			TBD			TBD	
		41490	100 RB with RBstart=0	2680			TBD			TBD			TBD	
Is antenna "a" dynamically activated (yes/no)?														
Is antenna "b" dynamically activated (yes/no)?														
Transmit antenna location ("a"/"b"/"other"):														

Note 1: Primary Mechanical Mode refers to device configured in preferred mode per manufacturer instructions (typically means antenna extended, fold or portrait slide open, but depends on form factor).

Note 2: "Yes" applies if the device supports voice operation in the talking position against the head in any cellular radio mode.

Note 3: "No" would be applicable to data-centric devices that are not held up against the head, e.g., embedded laptop solutions.

TABLE B-87 A-GPS WITH CDMA MAXIMUM TIS/UHIS/PIGS LEVEL REQUIREMENTS FOR THE PRIMARY MECHANICAL MODE[1]

Reference OTA Test Plan Table 6-13																		
Cellular Band	HL									HR								
	TIS			UHIS			PIGS			TIS			UHIS			PIGS		
	Limit (dBm)	Test Results (dBm)	Pass / Fail / Info	Limit (dBm)	Test Results (dBm)	Pass / Fail / Info	Limit (dBm)	Test Results (dBm)	Pass / Fail / Info	Limit (dBm)	Test Results (dBm)	Pass / Fail / Info	Limit (dBm)	Test Results (dBm)	Pass / Fail / Info	Limit (dBm)	Test Results (dBm)	Pass / Fail / Info
CDMA 800	TBD			TBD			TBD			TBD			TBD			TBD		
CDMA 1900	TBD			TBD			TBD			TBD			TBD			TBD		
CDMA 2100/ 1700	TBD			TBD			TBD			TBD			TBD			TBD		
Cellular Band	BHHL									BHHR								
	TIS			UHIS			PIGS			TIS			UHIS			PIGS		
	Limit (dBm)	Test Results (dBm)	Pass / Fail / Info	Limit (dBm)	Test Results (dBm)	Pass / Fail / Info	Limit (dBm)	Test Results (dBm)	Pass / Fail / Info	Limit (dBm)	Test Results (dBm)	Pass / Fail / Info	Limit (dBm)	Test Results (dBm)	Pass / Fail / Info	Limit (dBm)	Test Results (dBm)	Pass / Fail / Info
CDMA 800	TBD			TBD			TBD			TBD			TBD			TBD		
CDMA 1900	TBD			TBD			TBD			TBD			TBD			TBD		
CDMA 2100/ 1700	TBD			TBD			TBD			TBD			TBD			TBD		

Note 1: Primary Mechanical Mode refers to device configured in preferred mode per manufacturer instructions (typically means antenna extended, fold or portrait slide open, but depends on form factor).

TABLE B-88 A-GPS WITH GSM/UMTS MAXIMUM TIS/UHIS/PIGS LEVEL REQUIREMENTS FOR THE PRIMARY MECHANICAL MODE[1]

Reference OTA Test Plan Table 6-17																				
Cellular Band	Positioning Method	HL									HR									
		TIS			UHIS			PIGS			TIS			UHIS			PIGS			
		Limit (dBm)	Test Results (dBm)	Pass / Fail / Info	Limit (dBm)	Test Results (dBm)	Pass / Fail / Info	Limit (dBm)	Test Results (dBm)	Pass / Fail / Info	Limit (dBm)	Test Results (dBm)	Pass / Fail / Info	Limit (dBm)	Test Results (dBm)	Pass / Fail / Info	Limit (dBm)	Test Results (dBm)	Pass / Fail / Info	
GSM 850		TBD			TBD			TBD			TBD			TBD			TBD			
GSM 1900		TBD			TBD			TBD			TBD			TBD			TBD			
UMTS 850		TBD			TBD			TBD			TBD			TBD			TBD			
UMTS 1900		TBD			TBD			TBD			TBD			TBD			TBD			
UMTS 2100/ 1700		TBD			TBD			TBD			TBD			TBD			TBD			
Cellular Band	Positioning Method	BHHL									BHHR									
		TIS			UHIS			PIGS			TIS			UHIS			PIGS			
		Limit (dBm)	Test Results (dBm)	Pass / Fail / Info	Limit (dBm)	Test Results (dBm)	Pass / Fail / Info	Limit (dBm)	Test Results (dBm)	Pass / Fail / Info	Limit (dBm)	Test Results (dBm)	Pass / Fail / Info	Limit (dBm)	Test Results (dBm)	Pass / Fail / Info	Limit (dBm)	Test Results (dBm)	Pass / Fail / Info	
GSM 850		TBD			TBD			TBD			TBD			TBD			TBD			
GSM 1900		TBD			TBD			TBD			TBD			TBD			TBD			
UMTS 850		TBD			TBD			TBD			TBD			TBD			TBD			
UMTS 1900		TBD			TBD			TBD			TBD			TBD			TBD			
UMTS 2100/ 1700		TBD			TBD			TBD			TBD			TBD			TBD			
Note 1: Primary Mechanical Mode refers to device configured in preferred mode per manufacturer instructions (typically means antenna extended, fold or portrait slide open, but depends on form factor).																				

TABLE B-89 A-GPS WITH LTE MAXIMUM TIS/UHIS/PIGS LEVEL REQUIREMENTS FOR THE PRIMARY MECHANICAL MODE[1]

Reference OTA Test Plan Table 6-20																				
Cellular Band	UE based / UE Assisted	Usage Case	HL									HR								
			TIS			UHIS			PIGS			TIS			UHIS			PIGS		
			Limit (dBm)	Test Results (dBm)	Pass / Fail / Info	Limit (dBm)	Test Results (dBm)	Pass / Fail / Info	Limit (dBm)	Test Results (dBm)	Pass / Fail / Info	Limit (dBm)	Test Results (dBm)	Pass / Fail / Info	Limit (dBm)	Test Results (dBm)	Pass / Fail / Info	Limit (dBm)	Test Results (dBm)	Pass / Fail / Info
LTE 12		Held to head[2]	TBD			TBD			TBD			TBD			TBD			TBD		
		Hand held only[3]	TBD			TBD			TBD			TBD			TBD			TBD		
LTE 17		Held to head[2]	TBD			TBD			TBD			TBD			TBD			TBD		
		Hand held only[3]	TBD			TBD			TBD			TBD			TBD			TBD		
LTE 13[4]		Held to head[2]	TBD			TBD			TBD			TBD			TBD			TBD		
		Hand held only[3]	TBD			TBD			TBD			TBD			TBD			TBD		
LTE 13[5]		Held to head[2]	TBD			TBD			TBD			TBD			TBD			TBD		
		Hand held only[3]	TBD			TBD			TBD			TBD			TBD			TBD		
LTE 14		Held to head[2]	TBD			TBD			TBD			TBD			TBD			TBD		
		Hand held only[3]	TBD			TBD			TBD			TBD			TBD			TBD		
LTE 26		Held to head[2]	TBD			TBD			TBD			TBD			TBD			TBD		
		Hand held only[3]	TBD			TBD			TBD			TBD			TBD			TBD		
LTE 5		Held to head[2]	TBD			TBD			TBD			TBD			TBD			TBD		
		Hand held only[3]	TBD			TBD			TBD			TBD			TBD			TBD		
LTE 2		Held to head[2]	TBD			TBD			TBD			TBD			TBD			TBD		
		Hand held only[3]	TBD			TBD			TBD			TBD			TBD			TBD		
LTE 25		Held to head[2]	TBD			TBD			TBD			TBD			TBD			TBD		
		Hand held only[3]	TBD			TBD			TBD			TBD			TBD			TBD		
LTE 4		Held to head[2]	TBD			TBD			TBD			TBD			TBD			TBD		
		Hand held only[3]	TBD			TBD			TBD			TBD			TBD			TBD		

TABLE B-89 A-GPS WITH LTE MAXIMUM TIS/UHIS/PIGS LEVEL REQUIREMENTS FOR THE PRIMARY MECHANICAL MODE[1]

Cellular Band	UE based / UE Assisted	Usage Case	BHHL									BHHR								
			TIS			UHIS			PIGS			TIS			UHIS			PIGS		
			Limit (dBm)	Test Results (dBm)	Pass / Fail / Info	Limit (dBm)	Test Results (dBm)	Pass / Fail / Info	Limit (dBm)	Test Results (dBm)	Pass / Fail / Info	Limit (dBm)	Test Results (dBm)	Pass / Fail / Info	Limit (dBm)	Test Results (dBm)	Pass / Fail / Info	Limit (dBm)	Test Results (dBm)	Pass / Fail / Info
LTE 12		Held to head[2]	TBD			TBD			TBD			TBD			TBD			TBD		
		Hand held only[3]	N/A	N/A	N/A	N/A	N/A	N/A	N/A	N/A	N/A	N/A	N/A	N/A	N/A	N/A	N/A	N/A	N/A	N/A
LTE 17		Held to head[2]	TBD			TBD			TBD			TBD			TBD			TBD		
		Hand held only[3]	N/A	N/A	N/A	N/A	N/A	N/A	N/A	N/A	N/A	N/A	N/A	N/A	N/A	N/A	N/A	N/A	N/A	N/A
LTE 13[4]		Held to head[2]	TBD			TBD			TBD			TBD			TBD			TBD		
		Hand held only[3]	N/A	N/A	N/A	N/A	N/A	N/A	N/A	N/A	N/A	N/A	N/A	N/A	N/A	N/A	N/A	N/A	N/A	N/A
LTE 13[5]		Held to head[2]	TBD			TBD			TBD			TBD			TBD			TBD		
		Hand held only[3]	N/A	N/A	N/A	N/A	N/A	N/A	N/A	N/A	N/A	N/A	N/A	N/A	N/A	N/A	N/A	N/A	N/A	N/A
LTE 14		Held to head[2]	TBD			TBD			TBD			TBD			TBD			TBD		
		Hand held only[3]	N/A	N/A	N/A	N/A	N/A	N/A	N/A	N/A	N/A	N/A	N/A	N/A	N/A	N/A	N/A	N/A	N/A	N/A
LTE 26		Held to head[2]	TBD			TBD			TBD			TBD			TBD			TBD		
		Hand held only[3]	N/A	N/A	N/A	N/A	N/A	N/A	N/A	N/A	N/A	N/A	N/A	N/A	N/A	N/A	N/A	N/A	N/A	N/A
LTE 5		Held to head[2]	TBD			TBD			TBD			TBD			TBD			TBD		
		Hand held only[3]	N/A	N/A	N/A	N/A	N/A	N/A	N/A	N/A	N/A	N/A	N/A	N/A	N/A	N/A	N/A	N/A	N/A	N/A
LTE 2		Held to head[2]	TBD			TBD			TBD			TBD			TBD			TBD		
		Hand held only[3]	N/A	N/A	N/A	N/A	N/A	N/A	N/A	N/A	N/A	N/A	N/A	N/A	N/A	N/A	N/A	N/A	N/A	N/A
LTE 25		Held to head[2]	TBD			TBD			TBD			TBD			TBD			TBD		
		Hand held only[3]	N/A	N/A	N/A	N/A	N/A	N/A	N/A	N/A	N/A	N/A	N/A	N/A	N/A	N/A	N/A	N/A	N/A	N/A
LTE 4		Held to head[2]	TBD			TBD			TBD			TBD			TBD			TBD		
		Hand held only[3]	N/A	N/A	N/A	N/A	N/A	N/A	N/A	N/A	N/A	N/A	N/A	N/A	N/A	N/A	N/A	N/A	N/A	N/A

Note 1: Primary Mechanical Mode refers to device configured in preferred mode per manufacturer instructions (typically means antenna extended, fold or portrait slide open, but depends on form factor).

Note 2: Device operates held to the head and supports voice operation over the LTE airlink (e.g. VoIP)

Note 3: Device is hand held but does not support voice operation against the head while utilizing an LTE airlink (e.g., VoIP)

Note 4: Uplink allocation of 1 RB

Note 5: Uplink allocation of 12 RBs

B.1 EUT Measurement Data Files

Spherical-scan pattern data shall be supplied in a format accessible (i.e., readable) for additional examination and computation as outlined in Table B-90. The pattern data reported are Effective Isotropic Radiated Power (EIRP) for transmit tests and Effective Isotropic Sensitivity (EIS) for receive tests, as defined in Appendix E. For LTE receive tests where complex pattern data has been requested by the operator or device vendor, relative phase between the receivers shall also be reported; otherwise the relative phase shall be omitted. Both EIRP and EIS quantities shall be reported in units of dBm. In case of RSS-based measurements, the pattern data shall also be reported as the raw RSS values. For example report C/N_0 values for A-GPS, see Section 6.13. Relative phase quantities shall be reported in radians. For each cellular radio mode and frequency band combination that the EUT supports, complete spherical pattern files shall be provided for the following transmit and receive tests, as specified in Section 5 and Section 6: (3 different channels[4]) (N different EUT configurations[5], if applicable) (up to 5 different test conditions[6]).

Each transmit-test spherical-scan file shall contain measurements for 11 Theta cuts, 24 Phi cuts, and 2 polarizations. Based on samples measured every 15 degrees of rotation for each cut, 528 measurements are thus recorded in each transmit test file. Each receive-test spherical-scan file shall contain measurements for 5 Theta cuts, 12 Phi cuts, and 2 polarizations. Based on samples measured every 30 degrees of rotation for each cut, 120 measurements are recorded in each receive test file.

In cases where Theta Dependent Phi Optimization has been used for TRP measurements, each transmit-test spherical-scan file shall contain measurements for 11 Theta, variable Phi cuts and 2 polarizations. In addition, the Theta and Phi angles shall be recorded for every measurement. In cases where Theta Dependent Phi Optimization has been used for TIS measurements, each receive-test spherical-scan file shall contain measurements for 5 Theta, variable Phi cuts, and 2 polarizations. In addition, the Theta and Phi angles shall be recorded for every measurement.

4. “Channel” refers to the appropriate frequency pair for transmit and receive.
5. “EUT configuration” refers to antenna stowed or deployed, slide opened or closed, etc. for those EUTs that support multiple configurations.
6. “Test conditions” are free-space, right hand only, right hand and head, etc. as specified in Appendix A and Appendix C.

In addition to the spherical pattern data, for each cellular radio mode and band that the EUT supports, a file showing the appropriate BER, BLER, FER, or PER outcome per channel for the additional intermediate-channel, single-point receive tests specified in Section 6 is also required. The contents and number of channels reported in the intermediate-channel receive-test file will vary depending on the cellular radio mode, as described in Section 6.

For RSS-based measurements, in addition, the data for the linearization (Section 6.17.2) and for the sensitivity search shall be supplied.

TABLE B-90 EXAMPLE EUT MEASUREMENT PART DATA FILE FORMATS FOR TRANSMIT TESTS (TOP) AND RECEIVE TESTS (BOTTOM)

Date of Measurement:	24 Aug 2002
Device Mfr/Model:	Acme 2000
TX Frequency:	CH_i-TX
RX Frequency:	CH_i-RX
EUT Configuration:	Fold Open, Antenna Extended
Test Condition [Free Space, Simulated head and hand left and right, Simulated hand left and right]:	Free Space

θ (degrees)	Theta-Polarization TX EIRP (dBm)				Phi-Polarization TX EIRP (dBm)			
	ϕ=0 j = 0	ϕ=15 j = 1	•••	ϕ=345 j = M-1	ϕ=0 j = 0	ϕ=15 j = 1	•••	ϕ=345 j = M-1
15 i = 1	111.1	111.1	•••	111.1	111.1	111.1	•••	111.1
30 i = 2	111.1	111.1	•••	111.1	111.1	111.1	•••	111.1
• • •	• • •	• • •	• • •	• • •	• • •	• • •	• • •	• • •
165 i = N-1	111.1	111.1	•••	111.1	111.1	111.1	•••	111.1

θ (degrees)	**Theta-Polarization RX EIS (dBm)**				**Phi-Polarization RX EIS (dBm)**			
	ϕ =0 j = 0	**ϕ =30 j = 1**	**•••**	**ϕ =330 j = M-1**	**ϕ =0 j = 0**	**ϕ =30 j = 1**	**•••**	**ϕ =330 j = M-1**
30 i = 1	222.2	222.2	•••	222.2	222.2	222.2	•••	222.2
60 i = 2	222.2	222.2	•••	222.2	222.2	222.2	•••	222.2
• • •	• • •	• • •	• • •	• • •	• • •	• • •	• • •	• • •
150 i = N-1	222.2	222.2	•••	222.2	222.2	222.2	•••	222.2

θ (degrees)	**Theta-Polarization RX Relative Phase (radians)**				**Phi-Polarization RX Relative Phase (radians)**			
	ϕ =0 j = 0	**ϕ =30 j = 1**	**•••**	**ϕ =330 j = M-1**	**ϕ =0 j = 0**	**ϕ =30 j = 1**	**•••**	**ϕ =330 j = M-1**
30 i = 1	0.333	0.333	•••	0.333	0.333	0.333	•••	0.333
60 i = 2	0.333	0.333	•••	0.333	0.333	0.333	•••	0.333
• • •	• • •	• • •	• • •	• • •	• • •	• • •	• • •	• • •
150 i = N-1	0.333	0.333	•••	0.333	0.333	0.333	•••	0.333

B.2 Calculating Spatially Averaged Quantities

This subsection defines the figures of merit that shall be used to calculate the spatially averaged EIRP and EIS. The objective is to use the following figures of merit to observe trends in performance over different products.

The spatially averaged effective radiated power and sensitivity values shall be derived from the measurement data. The spatial average is calculated as a Sin-Theta weighted (sin (θ)) average over all elevation angles. Uniform weighting is also used to average over all azimuths. "Sin-Theta weighted average" is an averaging scheme that puts more emphasis on horizon data than zenith and nadir and is appropriate for use when samples are taken uniformly in Theta and Phi.

N and M are the number of angular intervals in Theta and Phi, respectively. Note that N and M are different for the transmit and receive measurements. For transmit tests, $N = 12$ and $M = 24$. For receive tests, $N = 6$ and $M = 12$. In both cases, the respective Theta and Phi indices, i and j, correspond to the measurement angles as demonstrated in Table B-90. A complete definition of terms is given in Appendix E.

When the measurement has been made based on RSS values, the spatially averaged quantities have to be calculated according to the guidelines given in Appendix E.4 using the linearized RSS values and the sensitivity search result.

Although the pattern data (EIRP and EIS quantities) are reported in units of dBm, the data is to be converted to linear units of milliwatts (mW) to perform the calculations in this subsection.

B.2.1 Total Radiated Power

For a complete sphere measured with N Theta intervals and M Phi intervals, both with even angular spacing, the Total Radiated Power is calculated as follows.

Total Radiated Power:

EQUATION B.1

$$TRP \cong \frac{\pi}{2NM} \sum_{i=1}^{N-1} \sum_{j=0}^{M-1} \left[EiRP_{\theta}(\theta_i, \phi_j) + EiRP_{\phi}(\theta_i, \phi_j) \right] \sin(\theta_i)$$

For the Theta Dependent Phi Optimization, where the number of Phi intervals, M_i, is a function of the Theta angle, the Total Radiated Power is calculated as follows:

EQUATION B.2

$$TRP \cong \frac{\pi}{2N}\sum_{i=1}^{N-1}\frac{1}{M_i}\sum_{j=0}^{M_i-1}\left[EiRP_\theta(\theta_i,\phi_j)+EiRP_\phi(\theta_i,\phi_j)\right]\sin(\theta_i)$$

where:

$$M_i = N_\phi(\theta_i)$$

B.2.2 Near-Horizon Partial Radiated Power

For a complete sphere measured with N = 12 Theta intervals and M Phi intervals, both with even angular spacing, the Near-Horizon Partial Radiated Power is calculated as follows.

Power radiated over ±45 degrees near the Horizon:

EQUATION B.3

$$NHPRP_{\pm 45} \cong \frac{\pi}{2NM}\left(\frac{cut_3+cut_9}{2}+\sum_{i=4}^{8}cut_i\right)$$

where

$$cut_i = \sum_{j=0}^{M-1}\left[EiRP_\theta(\theta_i,\phi_j)+EiRP_\phi(\theta_i,\phi_j)\right]\sin(\theta_i)$$

represents the weighted sum of each conical cut.

Power Radiated over ±30 degrees near the Horizon:

EQUATION B.4

$$NHPRP_{\pm 30} \cong \frac{\pi}{2NM}\left(\frac{cut_4+cut_8}{2}+\sum_{i=5}^{7}cut_i\right)$$

where, again,

$$cut_i = \sum_{j=0}^{M-1}\left[EiRP_\theta(\theta_i,\phi_j)+EiRP_\phi(\theta_i,\phi_j)\right]\sin(\theta_i)$$

represents the weighted sum of each conical cut.

For the Theta Dependent Phi Optimization, where the number of Phi intervals, M_i, is a function of the Theta angle, these equations become:

Power radiated over ±45 degrees near the Horizon:

EQUATION B.5

$$NHPRP_{\pm 45} \cong \frac{\pi}{2N}\left(\frac{cut_3 + cut_9}{2} + \sum_{i=4}^{8} cut_i\right)$$

where:

$$cut_i = \frac{1}{M_i}\sum_{j=0}^{M_i-1}\left[EiRP_\theta(\theta_i,\phi_j) + EiRP_\phi(\theta_i,\phi_j)\right]\sin(\theta_i)$$

represents the weighted sum of each conical cut.

Power Radiated over ±30 degrees near the Horizon:

EQUATION B.6

$$NHPRP_{\pm 30} \cong \frac{\pi}{2N}\left(\frac{cut_4 + cut_8}{2} + \sum_{i=5}^{7} cut_i\right)$$

where, again,

$$cut_i = \frac{1}{M_i}\sum_{j=0}^{M_i-1}\left[EiRP_\theta(\theta_i,\phi_j) + EiRP_\phi(\theta_i,\phi_j)\right]\sin(\theta_i)$$

represents the weighted sum of each conical cut.

B.2.3 Total Isotropic Sensitivity

For a complete sphere measured with N Theta intervals and M Phi intervals, both with even angular spacing, the Total Isotropic Sensitivity is calculated as follows.

Total Isotropic Sensitivity:

EQUATION B.7

$$TIS \cong \frac{2NM}{\pi \sum_{i=1}^{N-1} \sum_{j=0}^{M-1} \left[\frac{1}{EIS_{\theta}(\theta_i, \phi_j)} + \frac{1}{EIS_{\phi}(\theta_i, \phi_j)} \right] \sin(\theta_i)}$$

where EIS is the radiated effective isotropic sensitivity measured at each direction and polarization.

For the Theta Dependent Phi Optimization, where the number of Phi intervals, M_i, is a function of the Theta angle, the Total Isotropic Sensitivity is calculated as follows:

EQUATION B.8

$$TIS \cong \frac{1}{\frac{\pi}{2N} \sum_{i=1}^{N-1} \frac{1}{M_i} \sum_{j=0}^{M_i-1} \left[\frac{1}{EIS_{\theta}(\theta_i, \phi_j)} + \frac{1}{EIS_{\phi}(\theta_i, \phi_j)} \right] \sin(\theta_i)}$$

B.2.4 Near-Horizon Partial Isotropic Sensitivity

For a complete sphere measured with $N = 6$ Theta intervals and M Phi intervals, both with even angular spacing, the Near-Horizon Partial Isotropic Sensitivity is calculated as follows.

For sensitivity considered over ±45 degrees near the Horizon:

EQUATION B.9

$$NHPIS_{\pm 45} \cong \frac{2NM}{\pi \left(\frac{\sqrt{2}}{16} (cut_1 + cut_5) + \frac{\sqrt{2} + 6\sqrt{3}}{16} (cut_2 + cut_4) + cut_3 \right)}$$

where

$$cut_i = \sum_{j=0}^{M-1} \left[\frac{1}{EIS_{\theta}(\theta_i, \phi_j)} + \frac{1}{EIS_{\phi}(\theta_i, \phi_j)} \right]$$

represents the sum of each conical cut **without any weighting** (the $\sin(\theta_i)$ terms have already been calculated into the previous equation).

For sensitivity considered over ±30 degrees near the Horizon:

EQUATION B.10

$$NHPIS_{\pm 30} \cong \frac{2NM}{\pi\left(\frac{cut_2 + cut_4}{2} + cut_3\right)}$$

where

$$cut_i = \sum_{j=0}^{M-1}\left[\frac{1}{EIS_\theta(\theta_i,\phi_j)} + \frac{1}{EIS_\phi(\theta_i,\phi_j)}\right]\sin(\theta_i)$$

represents the weighted sum of each conical cut.

For the Theta Dependent Phi Optimization, where the number of Phi intervals, M_i, is a function of the Theta angle, these equations become:

For sensitivity considered over ±45 degrees near the Horizon:

EQUATION B.11

$$NHPIS_{\pm 45} \cong \frac{2N}{\pi\left(\frac{\sqrt{2}}{16}(cut_1 + cut_5) + \frac{\sqrt{2}+6\sqrt{3}}{16}(cut_2 + cut_4) + cut_3\right)}$$

where:

$$cut_i = \frac{1}{M_i}\sum_{j=0}^{M_i-1}\left[\frac{1}{EIS_\theta(\theta_i,\phi_j)} + \frac{1}{EIS_\phi(\theta_i,\phi_j)}\right]$$

represents the weighted sum of each conical cut.

For sensitivity considered over ±30 degrees near the Horizon:

EQUATION B.12

$$NHPIS_{\pm 30} \cong \frac{2N}{\pi\left(\frac{cut_2 + cut_4}{2} + cut_3\right)}$$

where:

$$cut_i = \frac{1}{M_i}\sum_{j=0}^{M_i-1}\left[\frac{1}{EIS_\theta(\theta_i,\phi_j)} + \frac{1}{EIS_\phi(\theta_i,\phi_j)}\right]\sin(\theta_i)$$

represents the weighted sum of each conical cut.

B.2.5 Upper Hemisphere Isotropic Sensitivity (UHIS)

For a complete sphere measured with *N* Theta intervals and *M* Phi intervals, both with even angular spacing, the Upper Hemisphere Isotropic Sensitivity, which represents the total power radiated in the theta range from 0 to 90 degrees is calculated as follows.

EQUATION B.13

$$UHIS \cong \frac{2NM}{\pi\left(\sum_{i=1}^{\frac{N}{2}-1} cut_i + \frac{1}{2}cut_{\frac{N}{2}}\right)}$$

where:

$$cut_i = \sum_{j=0}^{M-1}\left[\frac{1}{EIS_\theta(\theta_i,\phi_j)} + \frac{1}{EIS_\phi(\theta_i,\phi_j)}\right]\sin(\theta_i)$$

represents the weighted sum of each conical cut.

For the Theta Dependent Phi Optimization, where the number of Phi intervals, M_i, is a function of the Theta angle, the calculation of UHIS is defined as follows:

EQUATION B.14

$$UHIS \cong \frac{2N}{\pi\left(\sum_{i=1}^{\frac{N}{2}-1} cut_i + \frac{1}{2} cut_{\frac{N}{2}}\right)}$$

where:

$$cut_i = \frac{1}{M_i}\sum_{j=0}^{M_i-1}\left[\frac{1}{EIS_\theta(\theta_i,\phi_j)} + \frac{1}{EIS_\phi(\theta_i,\phi_j)}\right]\sin(\theta_i)$$

represents the weighted sum of each conical cut.

B.2.6 Partial Isotropic GPS Sensitivity (PIGS)

For a complete sphere measured with N=6 Theta intervals (30 degree spacing) and M Phi intervals, both with even angular spacing, the Partial Isotropic GPS Sensitivity, which represents the total power radiated in the theta range from 0 to 120 degrees is calculated as follows:

EQUATION B.15.

$$PIGS \cong \frac{2NM}{\pi\left(\sum_{i=1}^{\frac{N}{2}} cut_i + \frac{1}{2} cut_{\frac{N}{2}+1}\right)}$$

where:

$$cut_i = \sum_{j=0}^{M-1}\left[\frac{1}{EIS_\theta(\theta_i,\phi_j)} + \frac{1}{EIS_\phi(\theta_i,\phi_j)}\right]\sin(\theta_i)$$

represents the weighted sum of each conical cut.

For the Theta Dependent Phi Optimization, where the number of Phi intervals, M_i, is a function of the Theta angle, the calculation of PIGS is defined as follows:

EQUATION B.16

$$PIGS \cong \frac{2N}{\pi\left(\sum_{i=1}^{\frac{N}{2}} cut_i + \frac{1}{2} cut_{\frac{N}{2}+1}\right)}$$

where:

$$cut_i = \frac{1}{M_i}\sum_{j=0}^{M_i-1}\left[\frac{1}{EIS_\theta(\theta_i,\phi_j)} + \frac{1}{EIS_\phi(\theta_i,\phi_j)}\right]\sin(\theta_i)$$

represents the weighted sum of each conical cut.

B.3 3-D Plots

Plots shall be submitted for each EUT reported. Plot EIRP in units of dBm. Plot the inverted EIS in units of dBm (-EIS).

B.4 Range Reference Measurement Data File

Files containing the path loss terms employed for the measurements shall be provided as part of the CATL authorization process. Table 4-2 and Table 4-3 illustrate the data file format for these files.

B.5 Photographs and Identification of Hand Phantoms

Photographs of the configurations in which the EUT has been tested with hand phantoms, shall be included in the test report. Photographs of the configurations in which the EUT has been tested with the hand phantom mounted to the head phantom, shall be included in the test report.

In addition, the model and serial numbers of each hand phantom with which the EUT has been tested, shall also be included in the test report.

Appendix C SAM Head and Hand Phantom Definitions and EUT Test Positions (Normative)

This appendix provides references and specifications defining the required phantoms for simulating the human head and hand in various use modes. The specifications include required dimensions and dielectric properties for each phantom. The head phantom is defined based on the SAM Head Phantom defined in IEEE Std 1528-2003™, while the hand phantoms are defined based on an amalgamation of hand dimension data from several references and a number of human factors studies used to determine typical grips for different phone styles.

C.1 SAM Head Phantom—Reference Information

The EUT is to be placed in a head adjacent talk position or in a tilted talk position against the SAM head phantom. The head adjacent talk position in this Test Plan is the same as the "cheek" or "touch" position as is described in IEEE Std 1528-2003. The required head phantom is based on the "SAM" head phantom in the same IEEE standard.

The IEEE Standards Coordinating Committee 34 has defined a specific anthropomorphic mannequin, or 'SAM', as the head model for use in specific absorption rate (SAR) testing. The shape of this head is based on the anthropomorphic data of the 90th percentile adult male head dimensions as published by the US Army [Gorden et al., 1989], except for the distance between the back of the ear and the head.

To provide consistency between these two types of radiated measurements (SAR and TRP/ TIS), a nearly identical head phantom definition will apply to all measurements made in accordance with this Test Plan.

Figure C-1 shows the IEEE SCC34 "SAM" anthropomorphic head model where the sections in blue indicate normative areas and the silver band indicates informative data only.

Full details of the head's construction and reference points are given in IEEE Std 1528-2003.

The shell of the head phantom should be made of low permittivity (less than 5.0), low loss material (loss tangent less than 0.05) and have a thickness of 2.0 ±0.2 mm in all areas where the handset touches (except the ear).

FIGURE C-1 FRONT, BACK AND SIDE VIEW OF THE SAM HEAD PHANTOM/HEAD PHANTOM

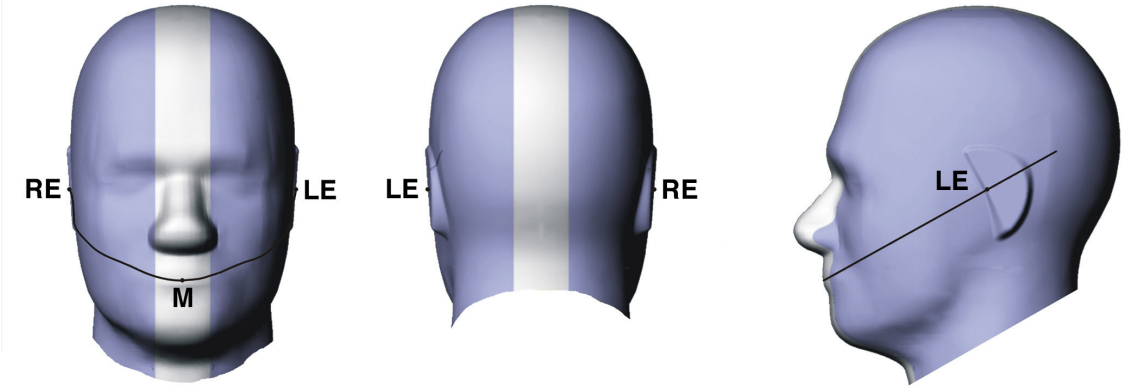

RE and LE shown in Figure C-1 are the Ear Reference Points for the right and left ears respectively.

C.2 Head Phantom Definitions and Requirements

C.2.1 Head Phantom Definition

For use in this Test Plan, this IEEE SAM head model has been extended below the neck region according to the informative data given in CENELEC EN50361: 2001 so that its overall external height (from the top of the skull to bottom of the base with the head looking out horizontally) shall be 300 mm ±2 mm. The external width of the base shall be symmetrically truncated to be 225 mm ±2 mm. The head phantom appears as shown in Figure C-2, in which the yellow areas indicate the informative CENELEC data.

FIGURE C-2 THE REQUIRED SAM HEAD PHANTOM

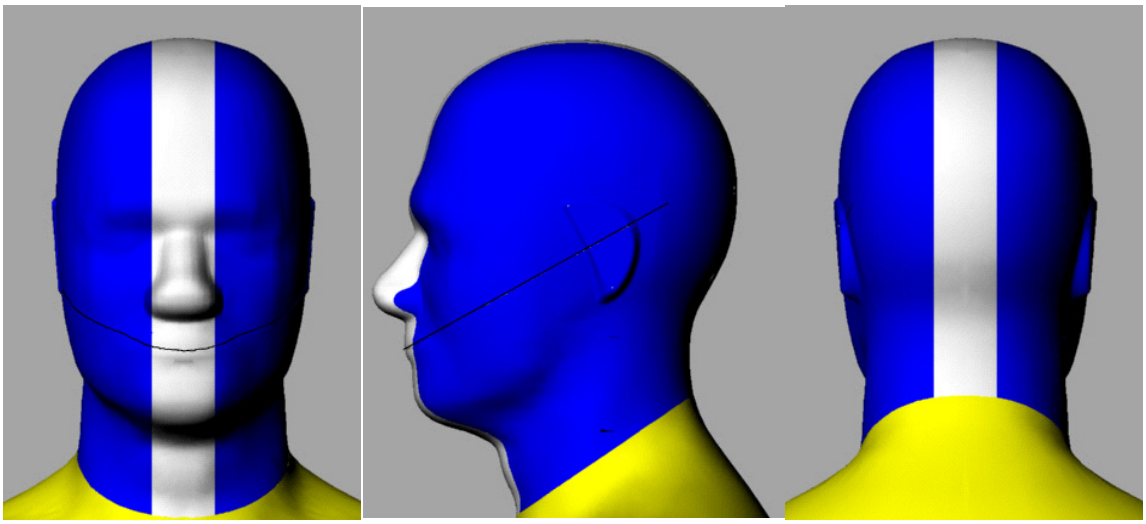

Figure C-2 combined with the text above, defines the shape and size of the external shell of the head phantom, but provision has to be made for filling/emptying the liquid contents and/or for sealing the base. No specific requirements are placed on the location of the hole(s) for filling/emptying the liquid contents of the head: these can be anywhere on or inside the head profile provided they do not obviously interfere with the measurements of this Test Plan. It is envisaged that either the top of the head or inside the neck region are the areas most likely to be used for this purpose. The plate that seals the base may incorporate the filling/emptying hole(s): this plate shall be made of a material with a dielectric constant of less than 5.0 and a loss tangent of less than 0.05. Whether containing the filling/emptying hole(s) (and the associated plug(s)/cap(s)/etc.) or serving as a mounting member, the plate shall additionally have a thickness of less than 13 mm and shall not extend beyond the external profile of the head phantom.

As an alternative head phantom, the IEEE SAM head model can be extended below the neck region so that its overall external height shall be 363 mm ±2 mm (without the filling cap). The external width of the base shall be symmetrically truncated to be 250 mm ±2 mm. The material in the extended region below 292 mm ±2 mm from the internal top of the IEEE SAM head shall have a dielectric constant of less than 5.0 and a loss tangent of less than 0.05. An additional uncertainty of 0.25 dB (k=2) shall be added [3].

The uncertainties caused by deviations from the nominal head shell dimensions shall be assessed as defined in Appendix G.10.2.

C.2.2 Head Phantom Dielectric Parameters

The IEEE Standards Coordinating Committee 34 has defined the dielectric properties of the head tissue-equivalent material to be used in the head phantom for SAR measurement. To provide consistency between SAR and TRP/TIS measurement, nearly identical material dielectric property values are to be used for this Test Plan. The target values are given in Table C-1; the tolerance is ±20%.

For dielectric properties of head tissue-equivalent material at other frequencies within the frequency range, a linear interpolation method shall be used.

TABLE C-1 DIELECTRIC PROPERTIES OF THE TISSUE-EQUIVALENT LIQUID

Frequency (MHz)	Target	
	ε	σ (S/m)
300	45.3	0.87
450	43.5	0.87
835	41.5	0.90
900	41.5	0.97
1450	40.5	1.20
1800	40.0	1.40
1900	40.0	1.40
1950	40.0	1.40
2000	40.0	1.40
2100	39.8	1.49
2450	39.2	1.80
3000	38.5	2.40
4000	37.4	3.43
5000	36.2	4.45
5200	36.0	4.65
5400	35.8	4.86
5600	35.5	5.06
5800	35.4	5.27
6000	35.1	5.48

Liquid tissue equivalent material may be used provided that the target dielectric properties are met within ±20%. Solid tissue equivalent material will be allowed in a future release of this test plan.

The composition of the material is not mandated provided the target dielectric properties are met within the permitted interval.

Recipes for liquid tissue equivalent material are provided in IEEE Std 1528-2003 where the main components are deionized water and sugar. Liquids are available from third parties or can mixed locally.

Care should be taken to verify the dielectric properties of the liquid tissue equivalent material at frequent enough intervals so as to guarantee compliance with the target (±20%) at the time of use for this Test Plan. Methods for measuring the dielectric properties are given in Appendix H.

Alternatively, liquid tissue equivalent material can be replaced by gel, provided that the volume of all air bubbles in the material is below 0.13 cubic centimeters, and the dielectric properties of these materials are stable with time and certified at the point of manufacture. Methods for measuring the dielectric properties are given in Appendix H.

Solid tissue equivalent material can be made from carbon loaded silicone, the dielectric properties of these materials are stable with time but must be certified at the point of manufacture following the protocol defined for the hand, i.e., a cubical sample (approximately 50 mm x 50 mm x 50 mm) for verification of stability and bulk properties and surface measurements at >20 defined positions on both sides of the head. Manufacturers of solid material head phantoms must certify that the volume of all air bubbles in the material must be below 0.13 cubic centimeters. For the purposes of this test plan, the remaining air bubbles can be assumed to have a negligible effects on the TRP/TIS.

Note: *Due to the inability to assess the measurement uncertainty of the solid tissue equivalent material for the head phantom, the use of solid head phantoms is not allowed in the test plan at this time.*

The uncertainties caused by deviations from the nominal head dielectric parameters shall be assessed as defined in Appendix G.10.2.

C.2.3 Head Fixturing Requirements

The primary goal of the fixture is to allow the accurate positioning of the EUT, while also being transparent and non-reflective to RF. The material for the EUT fixturing shall have a dielectric constant of less than 5.0 and a loss tangent of less than 0.05. Any fixture meeting these material parameters may be used as long as the uncertainty assessment is done and the overall uncertainty budget is met.

The method for assessing the uncertainty for the hand phantom fixturing is described in Appendix G.10.4 and can also be used for assessing the uncertainty for head fixturing.

No additional uncertainty assessment is needed if thin plastic "packing" tape is used to hold the EUT.

C.3 Hand Phantom—Reference Information

The human hand is one of the most complex parts of the human body. Detailed hand geometry not only varies from person to person, but the hand will change geometrically depending on the physical task assigned to it. Since mobile devices are used in conjunction with the hand, it is important that the hand is studied to determine the best scientific representation of the specific dimensions for a standard sized hand phantom. A large amount of published data exists regarding the human hand, but few papers address anthropometry of the hand.

C.3.1 Hand Anthropometric Research

The following articles contain information that is significant in determining the physical dimensions of a hand phantom and are used in conjunction with each other in the determination of the hand dimension parameters.

- Thomas M. Greiner; *Hand Anthropometry of US Army Personnel*, Army Natick Research Development and Engineering Center, 1991 - This study, sponsored by the Anthropology Branch at NATICK, is perhaps the largest and most comprehensive modern anthropometric study available. A sample size of 2304 people and 86 anthropometric categories were photographed, digitized, and measured. Measurements were taken from a number of landmarks on the hand, including creases in the skin of the hand, the tips of fingers, and other visible locations.
- Alvin R. Tilley and Henry Dreyfuss Associates; *The Measure of Man and Woman: Human Factors in Design*; Wiley, 1993 - This book contains some additional data regarding hand anthropometry to supplement the Greiner study. Although the Greiner study is mentioned, the source of the additional data in the book is unfortunately not referenced.
- B. Buchholz, T.J. Armstrong and S.A. Goldstein; "*Anthropometric data for describing the kinematics of the human hand*," Ergonomics vol. 35, no. 3, pp. 261-273, 1992 - This article identifies the locations of the internal rotational joints of the fingers with respect to the skin creases that are used as measurement references in the previous two studies. This information is required to develop an articulated kinematic hand model that can be posed with anatomically correct bends in the joints.
- W.D. Bugbee and M.J. Botte,; "*Surface Anatomy of the Hand: The Relationships Between Palmar Skin Creases and Osseous Anatomy*," Clinical Orthopaedics

and Related Research, 296, 122-126, 1993 - This study was performed on 48 adult corpse hands and 5 live human hands. It supplements the Buchholz article with additional data on the relationship between skin creases and internal bone structure, and especially for modeling distinct carpal and metacarpal bones.

C.3.2 Hand Reference Dimensions

Based on the analysis above, the necessary dimensions of the hand components were determined. Since no one study contains all of the necessary dimensions, some combining and scaling was performed using all four references.

The hand phantom is the average of the 50th percentile of men and women as taken from the data sources cited above. The full data set including averaged hand data (per gender) and skin crease to bone joint scaling factors can be found in the references.

The hand phantom dimensions are defined in Table C-2.

TABLE C-2 HAND PHANTOM DIMENSIONS

Description	Dim. (mm)	Notes
Interdigital Crotch Dimensions		
Between Digit II & III Crotch to Tip of Digit II	72.5	*Greiner #10*
Between Digit II & III Crotch to Tip of Digit III	80.5	*Greiner #22*
Between Digit III & IV Crotch to Tip of Digit IV	75.7	*Greiner #34*
Between Digit IV & V Crotch to Tip of Digit V	61.5	*Greiner #46*
Between Digit I & II Crotch to Tip of Digit I	56.5	*Tilley*
Major Hand and Wrist Dimensions		
Wrist Width	61.4	*Greiner #64*
Wrist Circumference	162.9	*Greiner #65*
Hand Length, Center of Wrist to Tip of Digit III	186.5	*Greiner #24*
Hand Circumference	200.2	*Greiner #60*
Palm Length: Middle Crease to Distal Palm Crease	105.7	*Greiner #61*
Hand Width	85.0	*Greiner #63*
Digit I Dimensions		
Distal Phalanx Length	29.4	*Buchholz, Greiner*
Proximal Phalanx Length	36.5	*Buchholz, Greiner*
Metacarpal Length	46.8	*Buchholz, Greiner*
Carpal Length	22.0	*Buchholz, Greiner*
DIP Width	22.3	*Greiner #4*

TABLE C-2 HAND PHANTOM DIMENSIONS

Description	Dim. (mm)	Notes
DIP Circumference	67.7	*Greiner #5*
Digit II Dimensions		
Distal Phalanx Length	18.1	*Buchholz, Greiner*
Middle Phalanx Length	26.7	*Buchholz, Greiner*
Proximal Phalanx Length	45.7	*Buchholz, Greiner*
Metacarpal Length	67.4	*Buchholz, Bugbee*
DIP Width	18.7	*Greiner #15*
PIP Width	21.5	*Greiner #13*
DIP Circumference	54.1	*Greiner #16*
PIP Circumference	64.8	*Greiner #14*
Carpal Length	20.6	*Buchholz, Bugbee*
Digit III Dimensions		
Distal Phalanx Length	20.1	*Buchholz, Greiner*
Middle Phalanx Length	31.7	*Buchholz, Greiner*
Proximal Phalanx Length	49.6	*Buchholz, Greiner*
Metacarpal Length	66.2	Buchholz, Bugbee
DIP Width	18.5	*Greiner #27*
PIP Width	20.9	*Greiner #25*
DIP Circumference	54.4	*Greiner #28*
PIP Circumference	65.5	*Greiner #26*
Carpal Length	17.4	*Buchholz, Bugbee*
Digit IV Dimensions		
Distal Phalanx Length	20.0	*Buchholz, Greiner*
Middle Phalanx Length	30.8	*Buchholz, Greiner*
Proximal Phalanx Length	45.5	*Buchholz, Greiner*
Metacarpal Length	60.4	*Buchholz, Bugbee*
DIP Width	17.2	*Greiner #39*
PIP Width	19.9	*Greiner #37*
DIP Circumference	50.3	*Greiner #40*
PIP Circumference	61.2	*Greiner #38*
Carpal Length	19.4	*Buchholz, Bugbee*
Digit V Dimensions		

TABLE C-2 HAND PHANTOM DIMENSIONS

Description	Dim. (mm)	Notes
Carpal Length	24.3	*Buchholz, Bugbee*
Distal Phalanx Length	17.3	*Buchholz, Greiner*
Middle Phalanx Length	21.8	*Buchholz, Greiner*
Proximal Phalanx Length	38.0	*Buchholz, Greiner*
Metacarpal Length	56.6	*Buchholz, Bugbee*
DIP Width	16.1	*Greiner #51*
PIP Width	17.9	*Greiner #49*
DIP Circumference	45.9	*Greiner #52*
PIP Circumference	54.2	*Greiner #50*

FIGURE C-3 PICTORIAL OF HUMAN HAND WITH DIMENSION LABELS

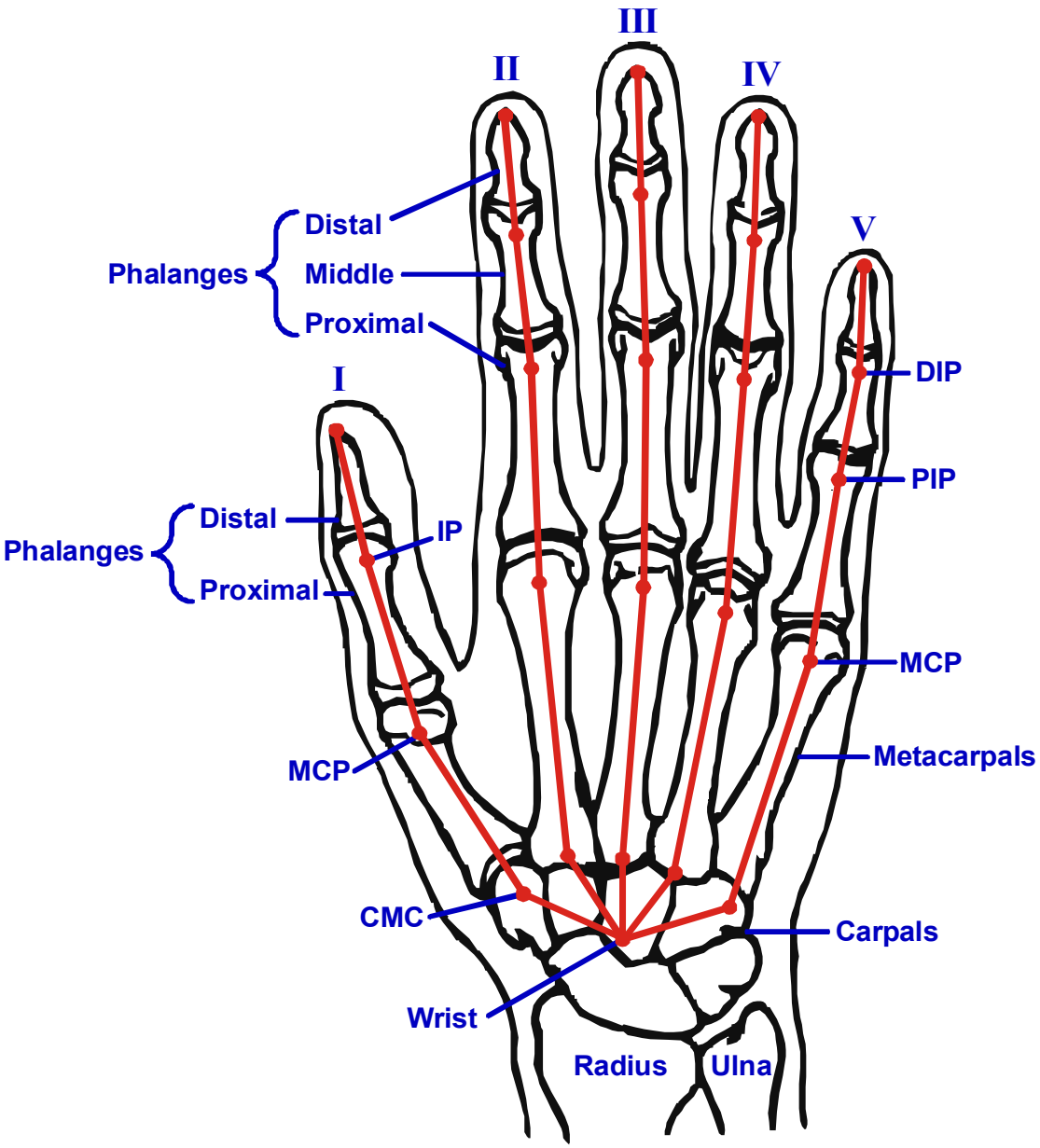

FIGURE C-4 OPEN HAND PHANTOM

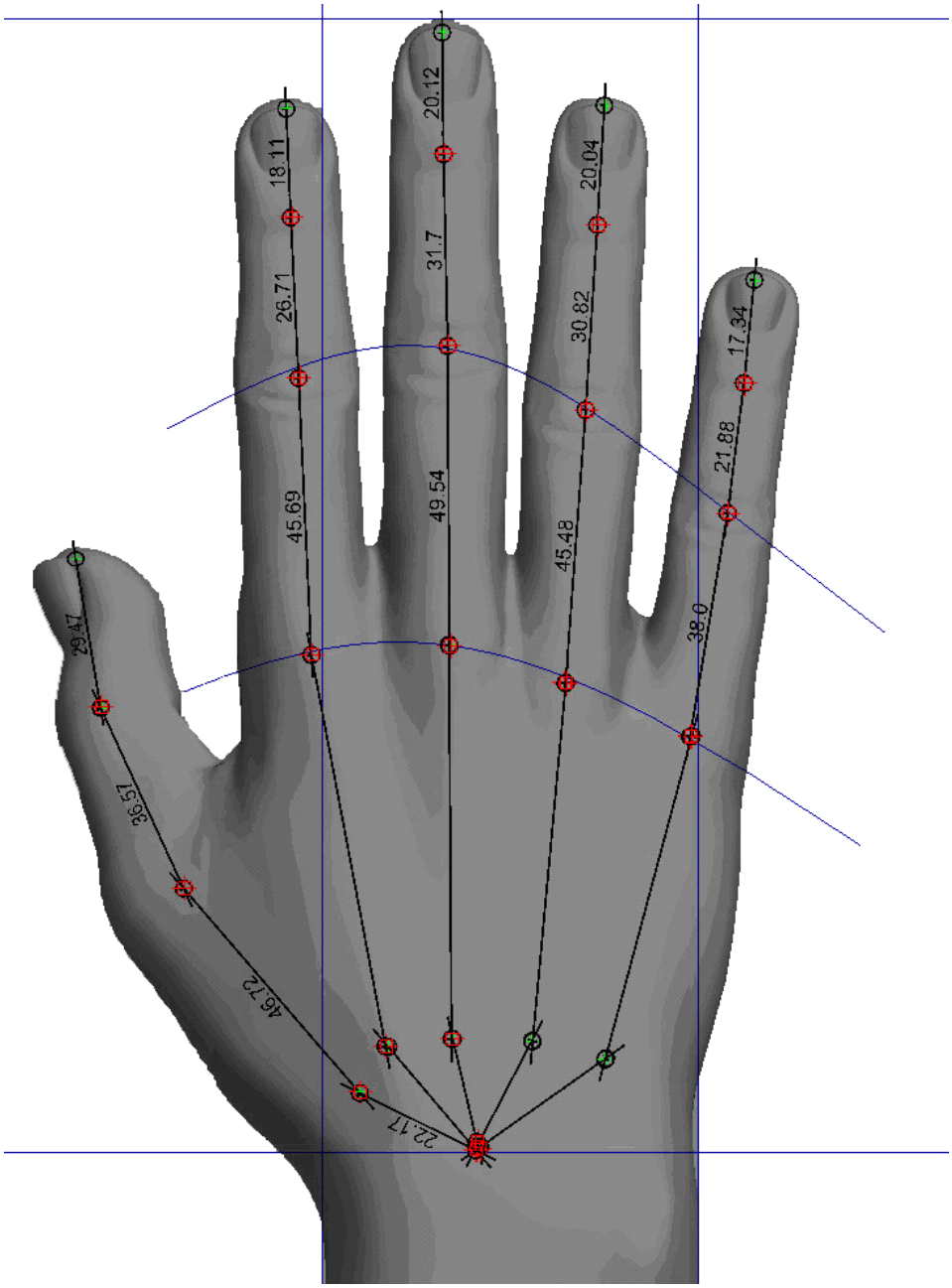

C.3.3 Hand Reference Dielectric Parameters

RF dielectric properties of the hand phantom are based on the dry palm human tissue measurement data as discussed in "*Tissue Equivalent Material for Hand Phantoms* [4]." Table C-3 lists the target conductivity (σ) (S/m) and relative permittivity (Er) for the hand phantom from 300 MHz to 6 GHz.

TABLE C-3 HAND DIELECTRIC PARAMETERS

Frequency (MHz)	Er	σ (S/m)
300	37.1	0.36
450	33.9	0.43
835	30.3	0.59
900	30.0	0.62
1450	27.9	0.85
1575	27.5	0.90
1800	27.0	0.99
1900	26.7	1.04
1950	26.6	1.07
2000	26.5	1.09
2100	26.3	1.14
2450	25.7	1.32
3000	24.8	1.61
4000	23.5	2.18
5000	22.2	2.84
5200	22.0	2.98
5400	21.7	3.11
5600	21.4	3.25
5800	21.2	3.38
6000	20.9	3.52

The material composition of the hand phantom is typically silicon loaded with carbon powder. The exact ratios of these compounds are not critical as long as the required RF dielectric properties are met.

C.4 Hand Phantom Definitions and Requirements

Contact certification@ctia.org to obtain hand phantom related CAD files.

C.4.1 Dielectric Parameter Requirements

The relative permittivity of hand phantoms shall be within ±15% of the values listed in Table C-3. The conductivity of hand phantoms shall be within ±25% of the values listed in Table C-3. The dielectric parameters shall be determined as described in Appendix G.10.3 using the methods in Appendix H, across the frequency bands for which the hand phantom is to be used. The RF dielectric parameters may be certified by the hand phantom manufacturer or determined by the test lab. The manufacturer shall provide a certificate indicating compliance over the applicable bands, including the measurement methodology and results, when they are certifying compliance with the RF dielectric parameters.

C.4.2 Hand Phantom Identification

The hand phantoms shall be traceable by their model and serial number. Hand phantom manufacturers shall provide a reference material block made of the same material as its associated hand phantoms, which is suitable for measuring its dielectric properties (see Appendix G.10.3). Each hand phantom shall be traceable to its associated reference material block. The identification marking of the hand phantom shall be on the back half of the hand, on the wrist, or on any side/rear mounting boss permanently attached to the hand, specifically in an area where there is no chance of interaction with the OTA measurement.

C.4.3 Hand Mechanical Requirements

The hand phantoms shall be constructed of a material that is sufficiently flexible to accommodate the range of devices specified in C.4.5, C.4.6, C.4.7, and C.4.8. The material shall also be made sufficiently stiff that the hand grip remains constant under rotation. Adequate material stiffness of the hand phantom has been found to be necessary to maintain high repeatability of OTA measurements.

The stiffness of the hand material shall be verified by measuring the deflection of the index finger of a molded monoblock hand phantom under a given weight.

1. Position the hand phantom such that the index finger is horizontal.
2. Apply an indicator needle that extends horizontally 55 mm ±1 mm beyond the tip of the index finger.
3. Record the position of the indicator needle on a vertical scale.

4. Apply 20 g ±0.2 g of weight centered 6 mm ±0.5 mm from the tip of the index finger towards the hand.
5. Record the new position of the indicator needle on a vertical scale.

The deflection of the index finger of the hand phantom shall be between 2 and 5 mm. Deflection less than 2 mm per 20 g weight indicates a material that is too rigid. Deflection greater than 5 mm per 20 g weight indicates a material that is too soft.

Figure C-5 shows a conformal fingertip weight container with indicator needle that shall be used for this purpose.

FIGURE C-5 CONFORMAL FINGERTIP WEIGHT CONTAINER

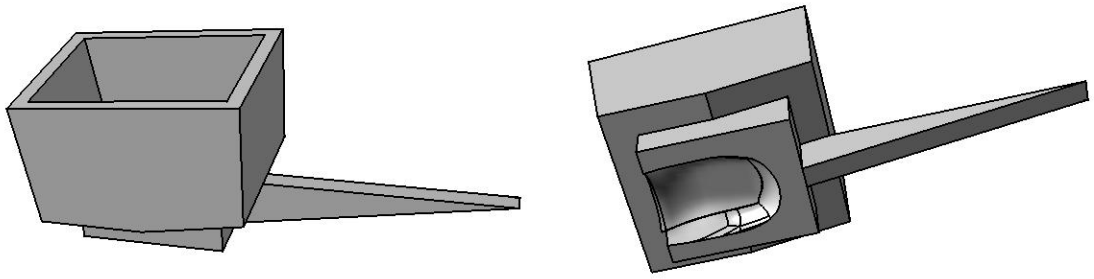

The weight container is fastened to the index fingertip with cellophane tape and the hand phantom is laid on its back on a flat surface, with the indicator needle pointing to a vertical millimeter ruler as shown in Figure C-6. The position of the needle is recorded before and after a known weight is placed in the container, and the difference is calculated to determine the deflection under load.

FIGURE C-6 MEASURING THE HAND PHANTOM MATERIAL STIFFNESS

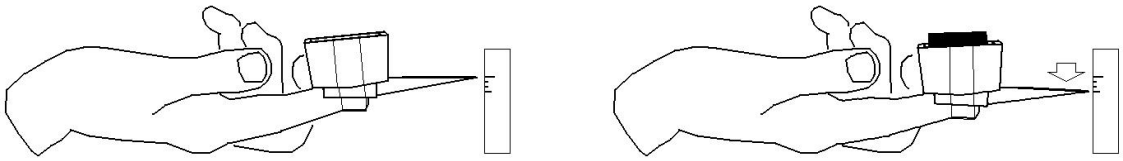

It is assumed that the other hand phantoms (i.e., fold, narrow data and PDA grips) will have similar stiffness as the monoblock hand from the same material. Therefore, a stiffness test of the monoblock hand alone is considered sufficient.

C.4.4 Hand Phantom Fixturing Requirements

The primary goal of the fixture is to allow the accurate positioning of the hand phantom and EUT, while also being transparent and non-reflective to RF. The material for the hand phantom fixturing shall have a dielectric constant of less than 5.0 and a loss tangent of less than 0.05. Any fixture meeting these material parameters may be used as long as the uncertainty assessment is done and the overall uncertainty budget is met.

The method for assessing the uncertainty for the hand phantom fixturing is described in Appendix G.10.4.

C.4.5 Monoblock Hand Phantom

The monoblock hand phantom is suitable for use with monoblock EUTs and closed portrait slide/rotator EUTs for head and hand testing. The EUTs should have sizes within the ranges specified within Table C-4.

TABLE C-4 RANGE OF MONOBLOCK-LIKE DEVICE SIZES SUITABLE FOR USE WITH MONOBLOCK HAND PHANTOM

Feature	Minimum (mm)	Maximum (mm)
Width	40	56
Length	95	none

FIGURE C-7 MONOBLOCK HAND PHANTOM; (A) LEFT HAND; (B) RIGHT HAND

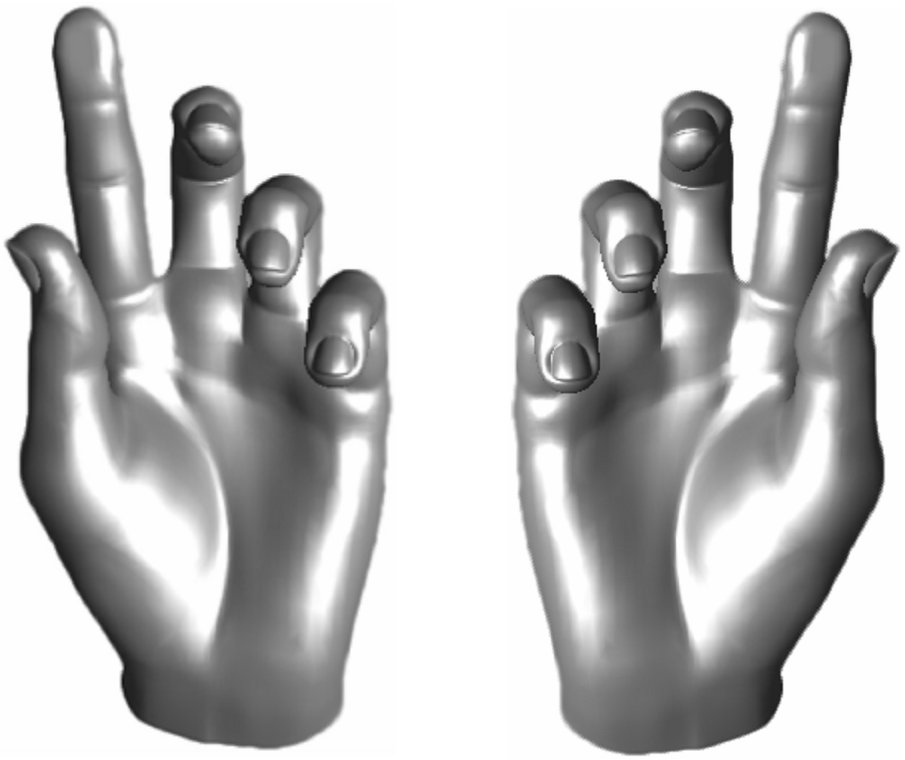

(a) (b)

C.4.6 Fold Hand Phantom

The fold hand phantom is suitable for use with fold and open portrait slide/rotator EUTs for head and hand testing, with sizes within the ranges specified within Table C-5.

TABLE C-5 RANGE OF FOLD DEVICE SIZES SUITABLE FOR USE WITH FOLD HAND PHANTOM

Feature	Minimum (mm)	Maximum (mm)
Width	40	56
Length between hinge and bottom edge	75	none

FIGURE C-8 FOLD HAND PHANTOM; (A) LEFT HAND; (B) RIGHT HAND

(a) (b)

C.4.7 Narrow Data Hand Phantom

The narrow data hand phantom is suitable for use with narrow EUTs with sizes within the ranges specified within Table C-6 for hand only testing.

TABLE C-6 RANGE OF NARROW DATA DEVICE SIZES SUITABLE FOR USE WITH NARROW DATA HAND PHANTOM

Feature	Minimum (mm)	Maximum (mm)
Width	40	56
Thickness	none	26

FIGURE C-9 NARROW DATA HAND PHANTOM; (A) LEFT HAND; (B) RIGHT HAND

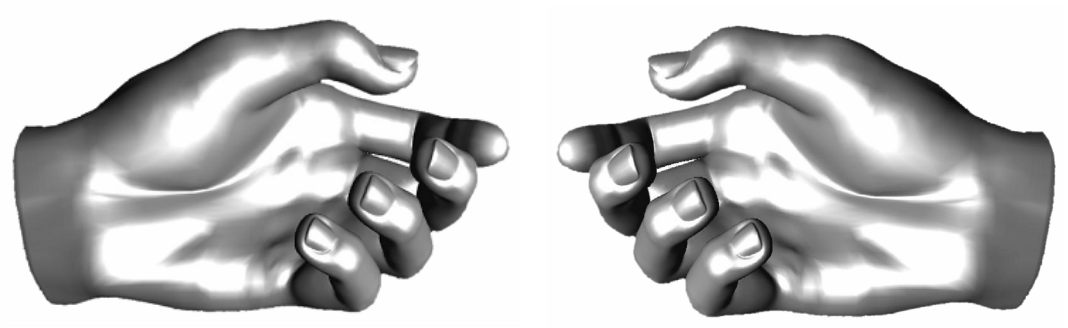

(a) (b)

C.4.8 PDA (Personal Digital Assistant) Grip Hand Phantom

The PDA (Personal Digital Assistant) grip hand phantom is suitable for use with EUTs with sizes within the ranges specified within Table C-7 for head and hand testing or hand only testing.

TABLE C-7 RANGE OF PDA DEVICE SIZES SUITABLE FOR USE WITH PDA HAND PHANTOM

Feature	Minimum (mm)	Maximum (mm)
Width	56	72
Thickness	none	none

FIGURE C-10 PDA HAND PHANTOM; (A) LEFT HAND; (B) RIGHT HAND

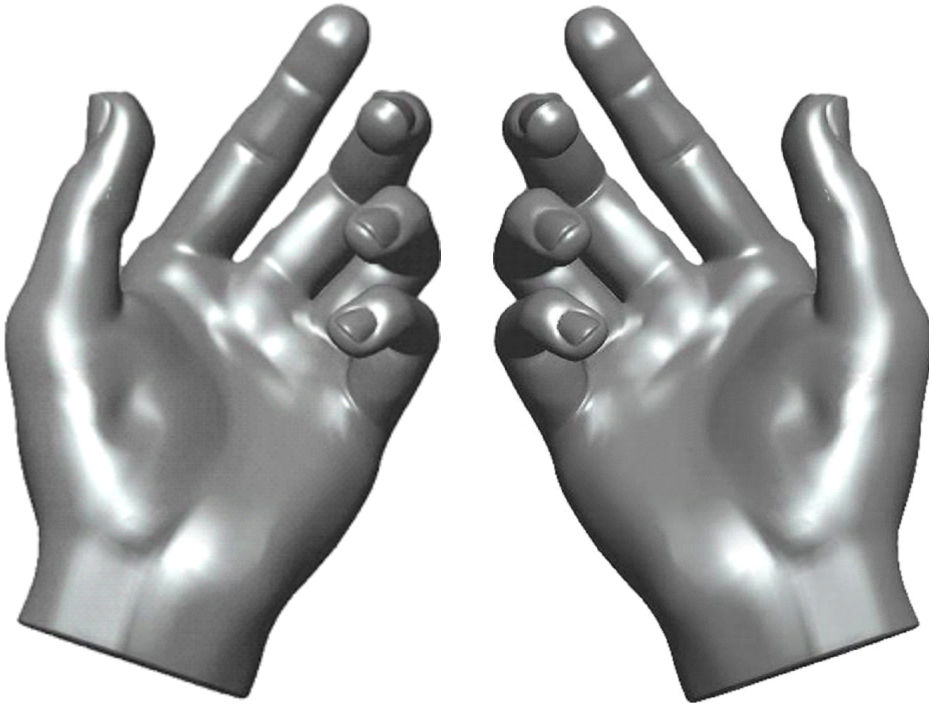

(a) (b)

C.4.9 Alternative Hand Phantoms

Alternative hand phantoms will be allowed in the future for EUTs with form factors or sizes not covered by the current hand phantoms. These new alternative hand phantoms shall be based on human factor studies. However, the method for performing and approving these human factor studies will be determined in a future update. These alternative hand phantoms shall be based upon the existing parameters outlined in Appendix C.3.2 and Appendix C.3.3. All new approved hand phantoms along with their corresponding human factors studies shall be published through CTIA after the associated EUT is launched in the US, thus making them available for public use.

The testing of devices with alternate hand phantoms is currently not required in this test plan.

Appendix D Power Measurement Considerations (Normative)

D.1 Power Measurement Equipment

In order to perform the power measurements required by this test, there are a number of considerations to take into account with regard to the test equipment used for these measurements. The recommended equipment for these power measurements is a spectrum analyzer, base station simulator, or power meter. Any selected instrumentation should be specifically designed for measurement of wireless modulated waveforms.

Modern spectrum analyzers provide direct control over the parameters necessary to measure different communications signals and can make the required measurements with relatively low uncertainty contributions. However, older units may not be capable of performing the measurements within the tolerance necessary to meet the overall uncertainty requirement. For units with sufficient linearity and stability, it may be possible to use a transfer standard from a power meter or other more accurate device during the Range Reference Measurement to reduce the total uncertainty associated with the analyzer.

Base station simulators are convenient for use in power measurements since their receiver settings are normally correctly pre-configured for each protocol. Thus, the detailed considerations presented in Appendix D.3 through Appendix D.8 have in general been handled by the manufacturer of the base station simulator. Another convenience is that the base station simulators are commonly used for conducted power measurements and the use of the same equipment for the TRP measurement facilitates consistent comparisons between conducted and radiated performances. Commonly used base station simulators are designed for conducted tests and require additional amplifiers to deal with the additional path losses associated with radiated tests.

Power meters are inherently broadband measurement receivers and as such require special precautions when used to measure OTA TRP. Modern power meters employ sampled diode detectors and digital signal processing techniques to enhance measurement accuracy and dynamic range. Detector video bandwidths have been extended to allow measurement of modulated wireless communications signals. Triggering capability has been improved to allow triggering from and measurement of burst modulated signals. These capabilities make power meters a viable alternative for OTA TRP measurement.

Other receivers may also be used to measure the received power provided it can be shown that they meet the necessary sensitivity, frequency discrimination, and waveform requirements for the respective communication technology.

D.2 General Measurement Requirements

This section lists general requirements and recommendations that should be addressed for all technologies and power measurement technologies. The primary goal is to insure that uniform total radiated power measurements can be made within the expected uncertainty of the given device. The remaining sections of this appendix contain the specific requirements for the individual technologies. Those sections assume the use of a spectrum analyzer or a power meter for the required measurements, although other receiver technologies may be used provided they are shown to produce equivalent results. Unless otherwise noted, RMS detector mode is assumed for the spectrum analyzer.

As with all RF measurements, special attention must be paid to the noise floor and compression levels of the instrumentation used. The wide dynamic range of signals expected for a typical ERP pattern measurement makes this difficult. The pulsed nature of wireless communication also places special demands on components such as preamplifiers and receiver front ends, which may perform fine for CW signals but produce harmonics or distortion for pulsed signals. The manufacturer's documentation for all components should be consulted to ensure that the expected level of performance can be obtained.

It is recommended that the peak signal received for a pattern be at least 40 dB above the noise floor. For a dipole this would result in a noise contribution of approximately 0.12 dB to the TRP, and just under 0.1 dB to the peak EIRP points. For antenna ranges for which the path loss would result in signal levels below this limit, either an appropriate preamplifier may be used (incorporating the necessary drift and linearity terms into the uncertainty budget), or the uncertainty budget must be increased to reflect the larger uncertainty due to the proximity to the noise floor. However, the total uncertainty of the measurement system may not exceed the limit given in Section 1.1. In no case shall the peak signal for a pattern be allowed to be within less than 20 dB (1.1 dB dipole TRP error) of the peak noise floor (i.e. the total usable dynamic range must be greater than 20 dB) since the corresponding loss in resolution would reduce the usefulness of the EIRP pattern for comparison purposes

Due to the modulated nature of the communication signal, specific dwell times are necessary to ensure repeatable measurements. The spectrum analyzer, power meter, or receiver must be able to support the required sweep times and specified number of uncorrelated data points to obtain the required measurement resolution for each technology. Software or firmware used to process the data must apply the appropriate digital filters to produce the required result.

Note: *Any external attenuation or amplification added to meet the above requirements must be included in the Range Reference Measurement, or added into the range correction as separate terms, and appropriate adjustments must be made to the total measurement uncertainty.*

For alternate receivers and power meters, they must support equivalent bandwidth and filter settings or functions that produce measurement results equivalent to those listed here.

D.2.1 Use of Spectrum Analyzers

While a number of newer spectrum analyzers are actually swept tuned receivers with appropriate spectrum displays and bandwidth filters, the traditional spectrum analyzer consists of a spectrum display that is tied to the output bits of the receiver's analog-to-digital converter (ADC). Different detectors are used to process each sample from the ADC to generate each data point on a trace. The sample detector takes a single ADC reading at each time or frequency point along a trace and returns that value as the displayed value. For other detectors, the ADC typically samples at some maximum rate and a processed result is displayed for each data point (commonly referred to as a "bin"). The number of samples taken per data point is given by the sweep time divided by the total number of points in the sweep and by the sample rate of the ADC. A peak detector returns the maximum value sampled during the portion of the sweep centered around each data point, while the RMS detector returns a linear average power of the available samples. Longer sweep times typically result in more samples per point and more accurate detector values. In addition to the sample rate of the ADC, the bandwidth filter will reduce the effective number of uncorrelated samples. The effective sample rate in samples per second is equivalent to the selected resolution bandwidth in Hz.

Since the vertical resolution of the display typically matches the available resolution of the ADC, the measured value is only accurate to the instrument specifications when the reading is within the graticule of the analyzer window. Points above or below that point are subject to compression and/or clipping effects that may not be apparent, especially when used with software automation. In addition, when using the RMS filter, the result can be biased even when the reported value is several dB from the top of the window, since some samples within the average may be clipped, resulting in a lower average value. Due to these limitations, the reference level and attenuation of the analyzer must be adjusted so that maximum signal level received during the pattern testing stays within the graticule. It is recommended that the peak signal remains at least 5 dB below the top of the window to avoid clipping unexpected peaks in the pattern. For tuned receiver type units, the settings must be adjusted as required so that the peak expected signal does not overdrive the receiver. Refer to the manufacturer's documentation to determine if the spectrum analyzer readings reported to software automation are valid when the signal is outside the bounds of the display.

D.2.2 Use of Communication Testers

Base station simulators typically perform power measurements using a spectrum analyzer concept. The RF signal is down-converted to IF frequencies and processed using fast Digital Signal Processors (DSP). The bandwidth of the receiver filter is automatically set to that required by the respective protocol. E.g., for GSM a 500 kHz Gauss filter is used, while for CDMA the receiver filter is set to 1.23 MHz as defined in IS-2000.2. As mentioned previously, additional external amplifiers and/or filters are required to achieve sufficient dynamic range for radiated tests. Base Station Simulators with separate transmit and receive

ports are most convenient for radiated tests. Otherwise, a single combined transmit/receive port would require a high isolation diplexer to split transmit and receive signals before amplification. In either case, it is important to verify that leakage from the output of the base station simulator does not adversely affect measurements on the input ports.

D.2.3 Use of Power Meters

Unlike spectrum analyzers, power meters are broadband power measurement devices. They will combine the power of all signals present at the sensor into a single amplitude level. However, power meters are simple and inexpensive compared to spectrum analyzers, and data acquisition speed can be significantly faster, reducing overall TRP measurement times. Careful system design is required to insure that measurement error due to unwanted signals is kept below specified levels.

When power meters are used for TRP measurement, it is required to show that the coupling of the forward link power into the measurement antenna does not significantly affect the measured power, and is accounted for appropriately in the uncertainty budget. The power sensor shall be assumed to report the signal level as the sum of the voltages present, and it is recommended that the measurement system provide a minimum of 45 dB of forward-to-reverse channel isolation to limit measurement error from this source to < 0.1 dB. Power meters not specifically designed or certified for wireless power measurements are prohibited.

Many sources of uncertainty impact the measurement of OTA TRP. These are covered in detail in Section 7 and Appendix G of this test plan. Two sources of uncertainty require special attention when using power meters to determine OTA TRP:

- The ratio of reverse-to-forward signal level (P_r/P_f) present at the power meter sensor
- The ratio of reverse signal level-to-noise (P_r/N) present at the power meter sensor

D.2.3.1 Ratio of Reverse-to-Forward Signal Level

A base station simulator (wireless communication test set) is used to place the handset into a call on a specified channel and at a specified reverse channel power level. At least one forward channel is required for handset control and forward traffic. In any practical OTA test chamber, some of the forward channel energy will couple into the measurement antenna and will be present at the measurement receiver. If the receiver is a broadband power meter, the sensor will respond to the forward channel energy as well as the reverse channel energy, producing measurement uncertainty. This source of uncertainty must be quantified and controlled.

TRP measurement uncertainty attributed to forward link power should be no greater than 0.1 dB. The level of isolation P_r/P_f required to achieve this uncertainty level is dependent on the characteristics of both the power sensor used and the signals being measured. Modern power meters use diode sensors almost exclusively. Diode sensors respond to voltage; they do not convert power to thermal energy. The power level reported with multiple signals present will depend on the level of coherency between the various signals. In the worst case, the diode sensor will add the peaks of the signals on a voltage basis. In this case, $P_r/P_f > 45$ dB is required to achieve an uncertainty level $U < 0.1$ dB.

In an OTA chamber, the forward path from the base station to the handset is established either through the measurement antenna, or through an auxiliary antenna mounted in the chamber for this specific purpose. In either case, some of the forward channel energy will couple into the measurement receiver. It is instructive to examine these two system configurations to determine if the forward signal level can be controlled to be greater than 45 dB below the reverse signal level expected during TRP measurements.

Figure D-1 shows a simplified diagram of an OTA system where the forward path is established using an auxiliary antenna. For purposes of discussion, the auxiliary antenna is assumed to be located directly behind the handset and in line with the measurement antenna. It is also assumed that the forward and reverse channel signals are co-polarized.

FIGURE D-1 USE OF AUXILIARY ANTENNA FOR FORWARD CHANNEL

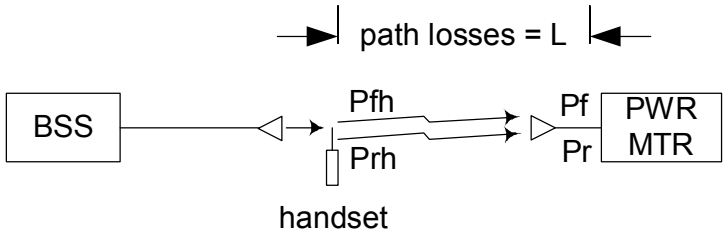

In this configuration, the forward channel signal will propagate past the handset and directly into the measurement antenna, a worst-case situation. Assume that the forward signal level arriving at the handset is P_{fh} and that the reverse signal level transmitted by the handset in the direction of the measurement antenna is P_{rh}. Since both the forward and reverse channel signals must travel over the same path through the measurement antenna to the power meter sensor, and since both will be in the same frequency range, both will be attenuated by the same amount when they arrive at the power meter sensor. Thus, the ratio P_r/P_f at the sensor will be the same as the ratio P_{rh}/P_{fh} at the handset.

For typical handsets, P_{fh} must be in the range -80 to -50 dBm to maintain a connection with the handset. Similarly, P_{rh} is typically in the range 0 to + 30 dBm, depending on the spatial orientation of the handset. Thus:

EQUATION D.1

$10*\log(P_r/P_f) = 10*\log(P_{rh}/P_{fh}) = P_{rh}(\text{dB}) - P_{fh}(\text{dB}) = 50 \text{ to } 110 \text{ dB}$

This range of values shows that this system configuration can satisfy the 45 dB isolation requirement.

Figure D-2 shows a simplified diagram of an OTA system where the forward path is established through the measurement antenna. A power splitter/combiner is used to couple the base station simulator to the measurement antenna for handset control. The power meter is connected to the opposite port of the splitter/combiner to measure the reverse channel signal transmitted by the handset.

FIGURE D-2 USE OF MEASUREMENT ANTENNA FOR FORWARD CHANNEL

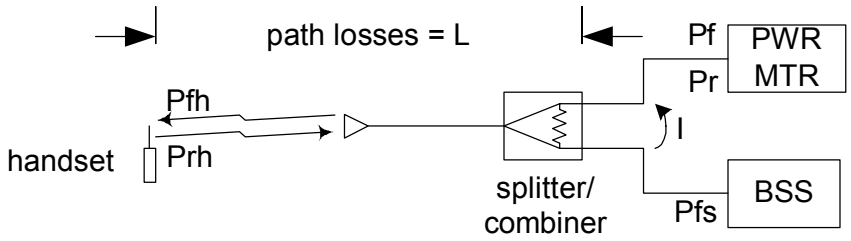

In this configuration, the forward channel signal travels to the handset over the same path as the reverse channel signal and will experience approximately the same losses denoted as *L*. The forward channel signal level appearing at the power meter sensor is dependent on the isolation of the splitter/combiner used, denoted as *I*. The ratio P_r/P_f can be expressed as:

EQUATION D.2

$10*\log(P_r/P_f) = 10*\log((P_{rh}*I)/(P_{fh}*L^2)) = P_{rh}(\text{dB}) - P_{fh}(\text{dB}) - 2*L \text{ (dB)} + I \text{ (dB)}$

Using the same range of values for P_{rh} and P_{fh} as was used above, and assuming L=40 dB and I=30 dB:

$10*\log(P_r/P_f) = 0 \text{ to } 60 \text{ dB}$

This range of values shows that this system configuration probably will not satisfy the 45 dB isolation requirement for all spatial orientations of the handset.

D.2.3.2 Ratio of Reverse Signal Level-to-Noise

Appendix D.2 above requires that the peak handset EIRP level must be at least 20 dB above the system noise floor and it is recommended that the peak level be at least 40 dB above the system noise floor.

Power meters using diode detectors as the power sensor are available with residual noise floors of -70 dBm or less. Diode detectors produce an output voltage proportional to input power level. Below about -30 dBm, the output voltage is proportional to the square root of the input power; at higher power levels the response becomes highly nonlinear and can vary significantly from device to device. To maximize instrument operating range, newer power meters have built in calibration circuitry which calibrates the sensor for operation in the nonlinear range from -30 to + 20 dBm. Thus the working dynamic range of these power meters is 90 dB.

In order to meet the noise floor requirements stated above, the peak EIRP level present at the power meter detector must be at least -50 dBm, with a recommended level of -30 dBm. These levels can be achieved with current OTA system configurations.

Wireless communications systems in use today use digital modulation techniques almost exclusively. These complex modulation formats are generally transmitted as a burst (GSM) or as a spread spectrum signal resembling noise (CDMA). Accurate measurement of the power level of these signals requires sampling the signal at a fast enough rate to reproduce the signal. For burst modulated signals, it is necessary to synchronize the duration of the measurement to the burst so that only the significant central region of the burst is captured. For spread spectrum signals, the signal must be sampled over the full extent of the channel spectrum to capture the true peak and average power levels.

The complex nature of wireless signals originally required the use of high speed sampling spectrum analyzers (or base station simulators) to accurately measure the levels of the signals transmitted by a mobile handset. However, newer power meters from several manufacturers have been designed specifically for wireless modulation formats. Power meters used for OTA TRP tests shall meet or exceed the following requirements:

- Minimum sampling rate of 2.5 MHz.
- Triggering modes to allow triggering from the rising edge of a burst modulated signal.
- Gating, delay and holdoff features to allow selection of the central region of pulses and bursts and collection of over 750,000 data samples over the selected region.
- Power sensors specifically designed for measurement of wireless modulation formats with wide video bandwidths.

D.3 TDMA

This section was removed for V3.1.

D.4 GSM/GPRS (GMSK Modulation)

GSM Circuit Switched and GPRS Packet Switched modes use a constant envelope modulation known as Gaussian Minimum Shift Keying (GMSK) that encodes one bit per symbol. The signal is slotted into 8 timeslots of approximately 0.577 ms with 148 symbols per slot.

For the purposes of characterizing antenna performance, the minimum required power measurement is given by the linear average of at least 1100 samples across the central 85% of a single valid GMSK burst (corresponding to approximately 5 samples per symbol). This is typically accomplished using the RMS detector of a spectrum analyzer with a sample resolution of 450 ns or better. Alternatively, the average of more than one burst may be used to reach the required sample count using either the RMS or sample detectors. In no case shall the sample rate be less than the symbol rate (270,833 symbols/s). The linear average of multiple bursts may also be used to reduce the random component of the uncertainty due to any variation in pulse magnitude. For multi-slot GPRS signals, the linear average of the center 85% of all active timeslots in one cycle should be used. A valid burst is defined as one having a width of 0.577 ms ±10%. The spectrum analyzer must be set for zero-span using video or burst triggering with resolution and video bandwidths of 300 kHz. The trigger level should be set as close to the noise floor as possible without generating spurious triggers (typically 5-10 dB above the noise). For single timeslot measurements of a single pulse, the sweep time should be set such that the pulse takes up the majority of the available analyzer window. A setting of 0.6 ms is recommended. For multi-slot measurements, the span can be set to just larger than the total number of timeslots to be measured. Ideally there should be at least 100 points per timeslot to ensure that the center 85% of each timeslot can be easily determined.

If a power meter is used, it must be capable of triggering from and measuring burst modulated signals with complex modulation formats. It must also have the capability to exclude segments of the beginning and ending of the burst so that the average power level of a defined central region can be measured. The power meter sensor must have a minimum video bandwidth of at least 300 kHz. The sample rate of the power meter must be sufficiently high that a minimum of 300 samples a taken across the central 85% of the pulse

Power meters using diode detectors are sampling detectors. The meter should be configured to respond as an RMS detector.

As the GSM pulse level approaches the trigger level, spurious triggering may result. Due to this, the minimum dynamic range requirement from Appendix D.2 is referenced from the trigger level rather than the noise floor. This is in order to reduce the number of spurious triggers caused by the nulls reaching the trigger level. Provided this requirement is met, pulses

unable to meet the width criteria above after several retries may use the maximum signal level rather than the average of the center 85%. Similarly, the value of the trigger level may be substituted for signal levels below the trigger level that are unable to cause the analyzer to trigger. These allowances are made since these values will be in deep nulls of the pattern and have an insignificant effect on the TRP.

Refer to the following figures for examples of acceptable and unacceptable GSM pulses, as well as typical behavior as the signal approaches the trigger level. Note that as expected, the noise level increases as the signal approaches the noise floor. However, it should also be noted that the use of average pulse power as opposed to peak power reduces the uncertainty of the result due to the noise by approximately the square root of the number of points averaged. This is because the noise is a random error effect and the averaging process reduces the uncertainty, effectively lowering the noise floor.

FIGURE D-3 SAMPLE GSM POWER ENVELOPE WITH ACCEPTABLE RESOLUTION

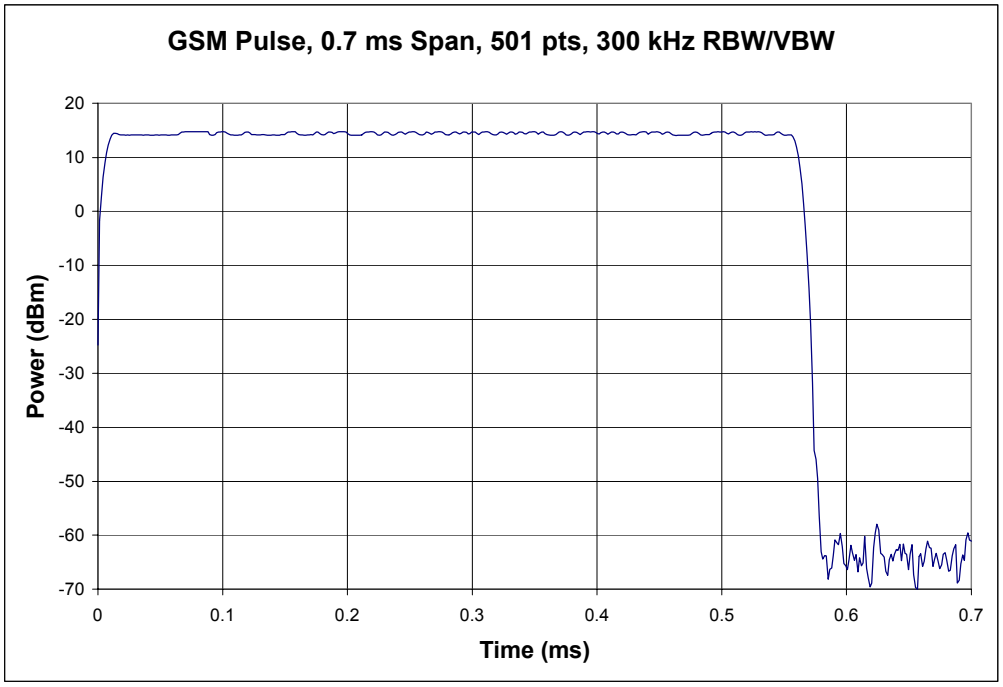

FIGURE D-4 SAMPLE GSM POWER ENVELOPE WITH INSUFFICIENT RESOLUTION

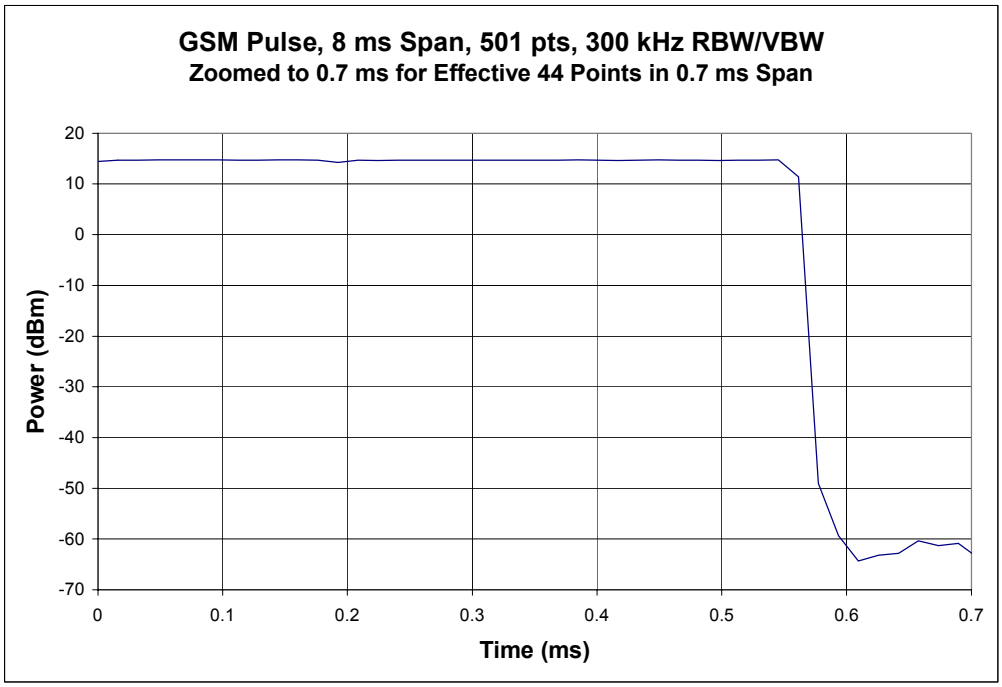

FIGURE D-5 SAMPLE GSM PULSES SHOWING INCREASE IN NOISE AS SIGNAL APPROACHES TRIGGER LEVEL

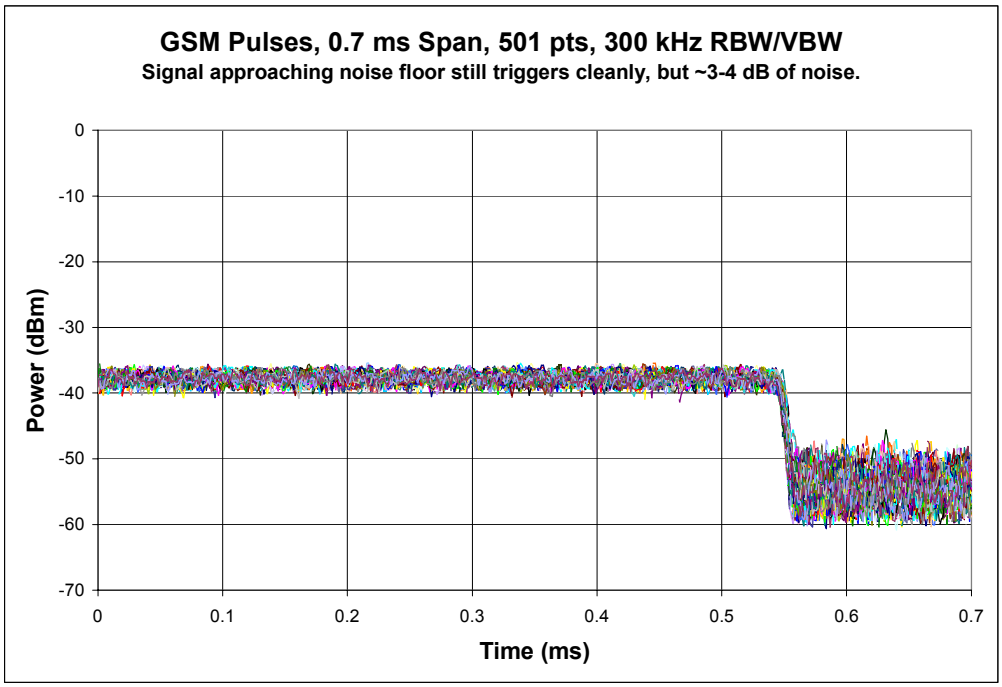

D.5 EGPRS/EDGE (8PSK Modulation)

EGPRS (EDGE) Packet Switched modes use a non-constant envelope modulation (8-PSK) modulation known as 8-Phase Shift Keying (8-PSK) that encodes three bits per symbol. The signal is slotted into 8 timeslots of approximately 0.577 ms with 148 symbols per slot. The non-constant modulation envelope of the 8-PSK pulse has almost 20 dB variation peak-to-null, and causes the average power of each frame to vary significantly based on the content of the frame, necessitating the average of multiple frames in order to obtain a stable average power reading. Some GMSK pulses are randomly interspersed between the 8-PSK pulses and must be detected separately and removed from the measurement. The treatment of the 8-PSK pulses is similar to that for GSM.

For the purposes of characterizing antenna performance, the minimum required power measurement is given by the linear average of a minimum of 1100 samples (corresponding to approximately 5 samples per symbol) across the central 85% of at least 20 valid 8-PSK bursts. This is typically accomplished using the RMS detector of a spectrum analyzer with a sample resolution of 450 ns or better. Averaging the power of 20 frames should reduce the resulting random uncertainty of a single data point to below ±0.1 dB. Averaging 50 frames should reduce the random uncertainty below ±0.05 dB. If the sample resolution is not high enough to meet the above criteria, or if only a sample detector is available, the number of frames averaged may be increased proportionally until the required number of individual samples is measured using either the RMS or sample detectors. In no case shall the sample rate be less than the symbol rate (270,833 symbols/s). For multi-slot EGPRS signals, the linear average of the center 85% of all active timeslots in one cycle should be used. A valid burst is defined as one having a width of 0.577 ms ±10%. The spectrum analyzer must be set for zero-span using video or burst triggering with resolution and video bandwidths of 300 kHz. The trigger level should be set as close to the noise floor as possible without generating spurious triggers (typically 5-10 dB above the noise). For single timeslot measurements of a single pulse, the sweep time should be set such that the pulse takes up the majority of the available analyzer window. A setting of 0.6 ms is recommended. For multi-slot measurements, the span can be set to just larger than the total number of timeslots to be measured. Ideally there should be at least 100 points per timeslot to ensure that the center 85% of each timeslot can be easily determined.

Due to the depth of nulls seen in 8-PSK pulses, the minimum dynamic range requirement from Appendix D.2 is increased by 20 dB and referenced from the trigger level rather than the noise floor. This is in order to reduce the number of spurious triggers caused by the nulls reaching the trigger level. Provided this requirement is met, pulses unable to meet the width criteria above after several retries may use the maximum signal level rather than the average of the center 85%. Similarly, the value of the trigger level may be substituted for signal levels below the trigger level that are unable to cause the analyzer to trigger. These allowances are made since these values will be in deep nulls of the pattern and have an insignificant effect on the TRP.

If a power meter is used, it must be capable of triggering from and measuring burst modulated signals with complex modulation formats. It must also have the capability to exclude segments of the beginning and ending of the burst so that the average power level of a defined central region can be measured. The power meter sensor must have a minimum video bandwidth of at least 300 kHz. The sample rate of the power meter must be sufficiently high that a minimum of 300 samples a taken across the central 85% of the pulse

Power meters using diode detectors are sampling detectors. The meter should be configured to respond as an RMS detector.

Refer to the following figures for examples of acceptable and unacceptable 8-PSK pulses, as well as typical behavior as the signal approaches the trigger level. Note that as expected, the noise level increases as the signal approaches the noise floor. However, it should also be noted that the use of average pulse power as opposed to peak power reduces the uncertainty of the result due to the noise by approximately the square root of the number of points averaged. This is because the noise is a random error effect and the averaging process reduces the uncertainty, effectively lowering the noise floor.

FIGURE D-6 SAMPLE 8-PSK POWER ENVELOPE WITH ACCEPTABLE RESOLUTION

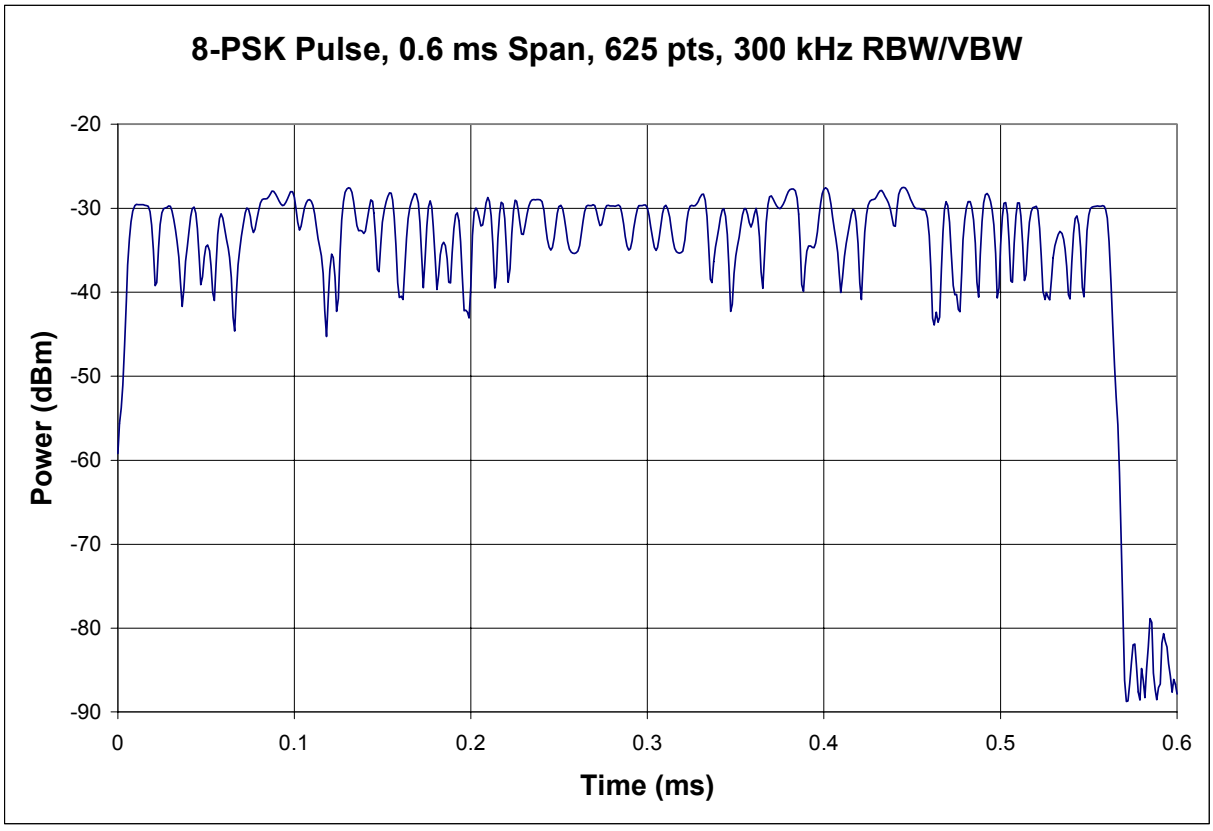

FIGURE D-7 MULTIPLE 8-PSK PULSES WITH RANDOM DATA CONTENT

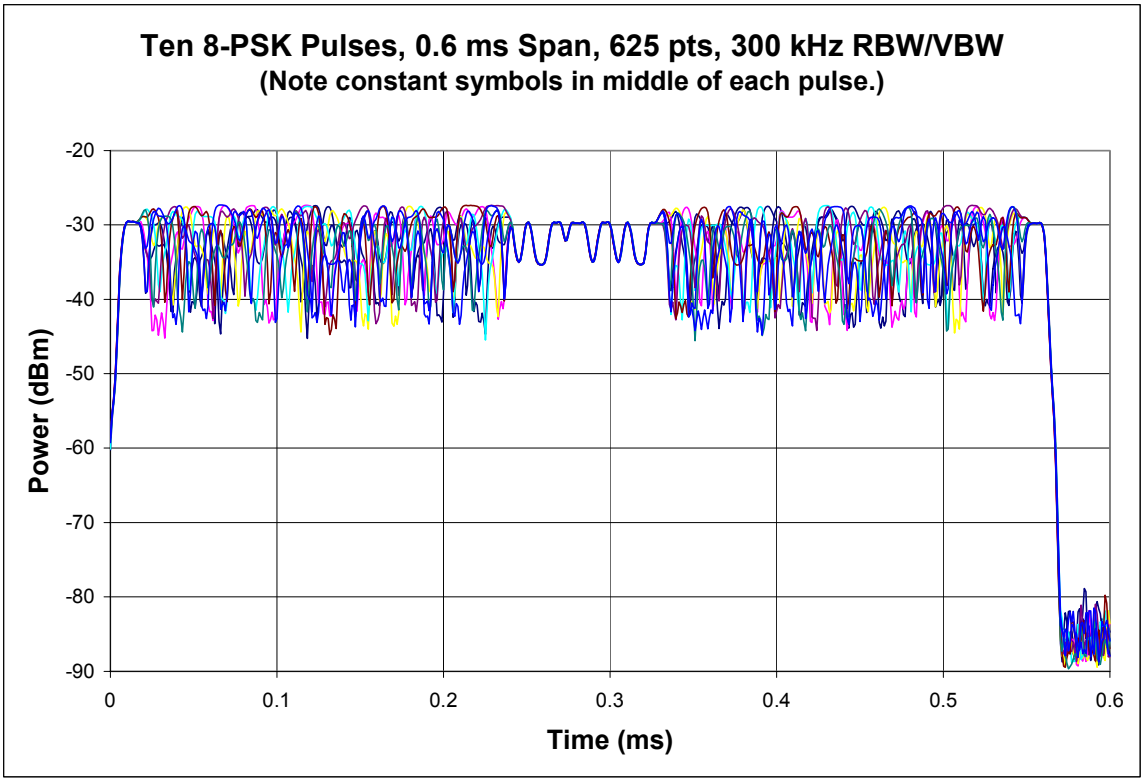

FIGURE D-8 EXAMPLE OF GMSK BURSTS MIXED IN WITH 8-PSK DATA

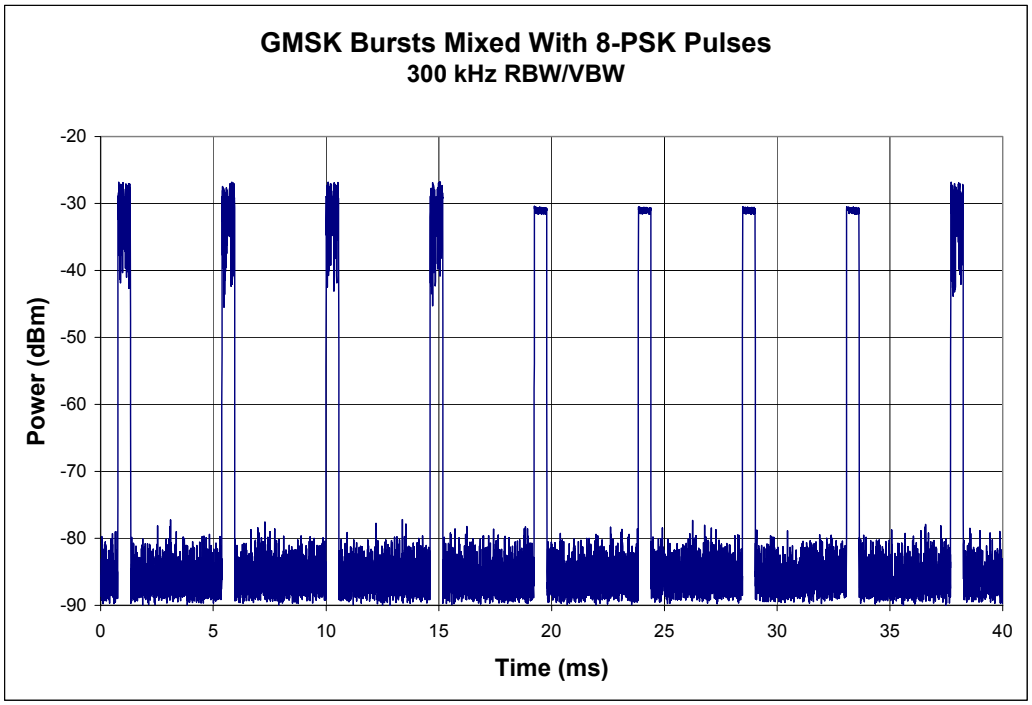

FIGURE D-9 SAMPLE 8-PSK PULSES SHOWING MIS-TRIGGERING AND INCREASE IN NOISE AT LOW LEVELS

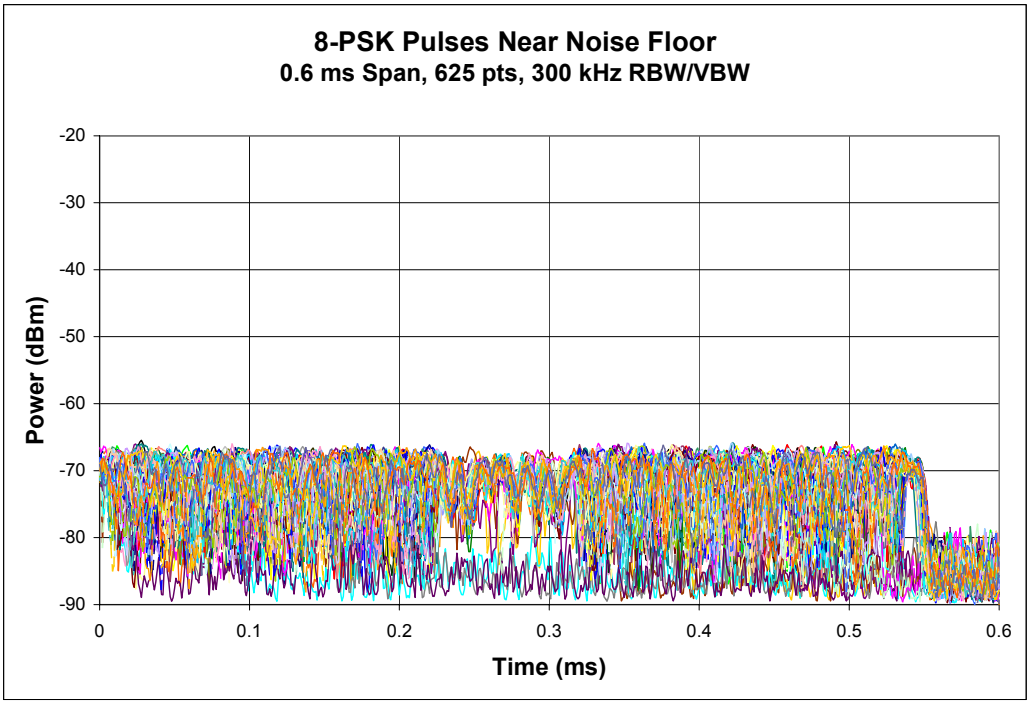

FIGURE D-10 SAMPLE MULTISLOT 8-PSK PULSES

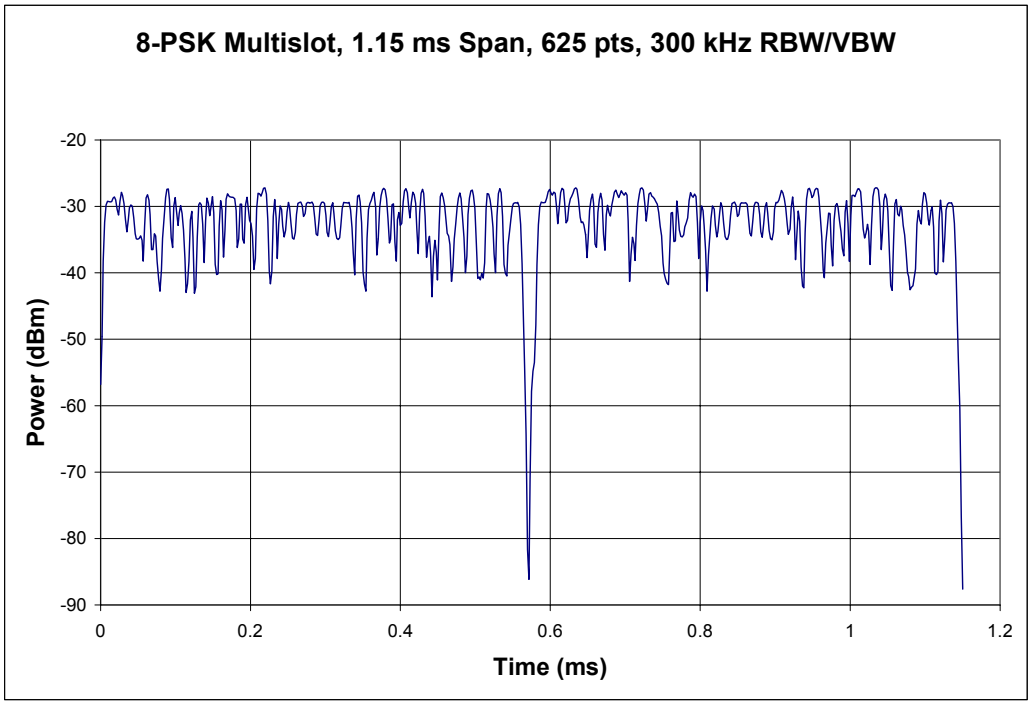

FIGURE D-11 BAD 8-PSK MULTISLOT TRACE RESULTING FROM GMSK BURST

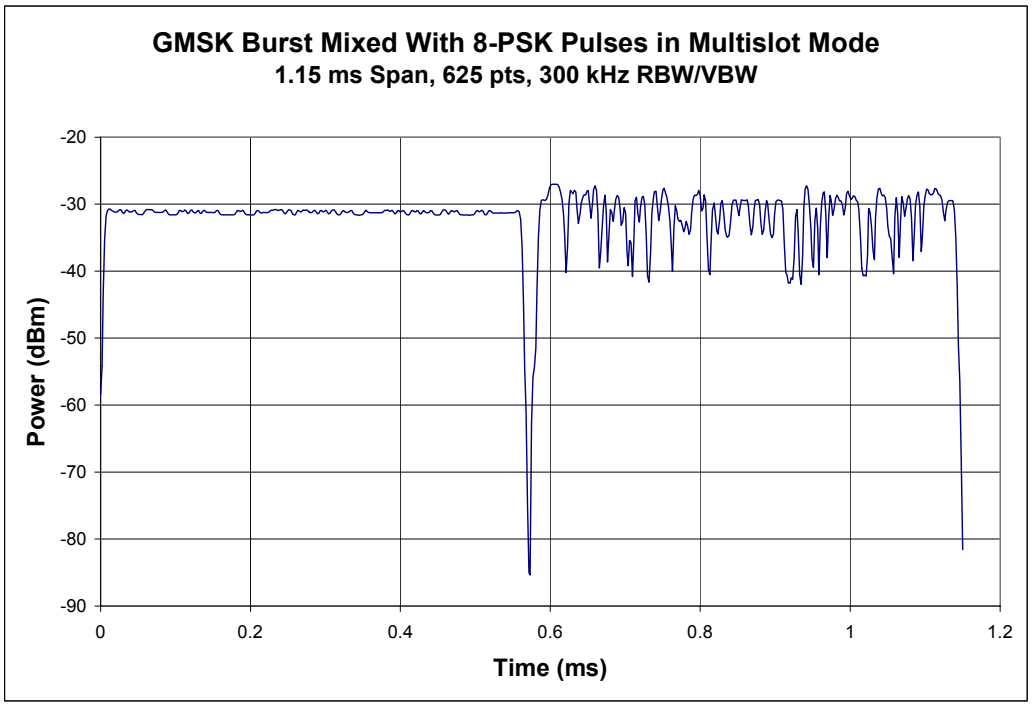

FIGURE D-12 BAD 8-PSK MULTISLOT TRACE RESULTING FROM MIS-TRIGGERING

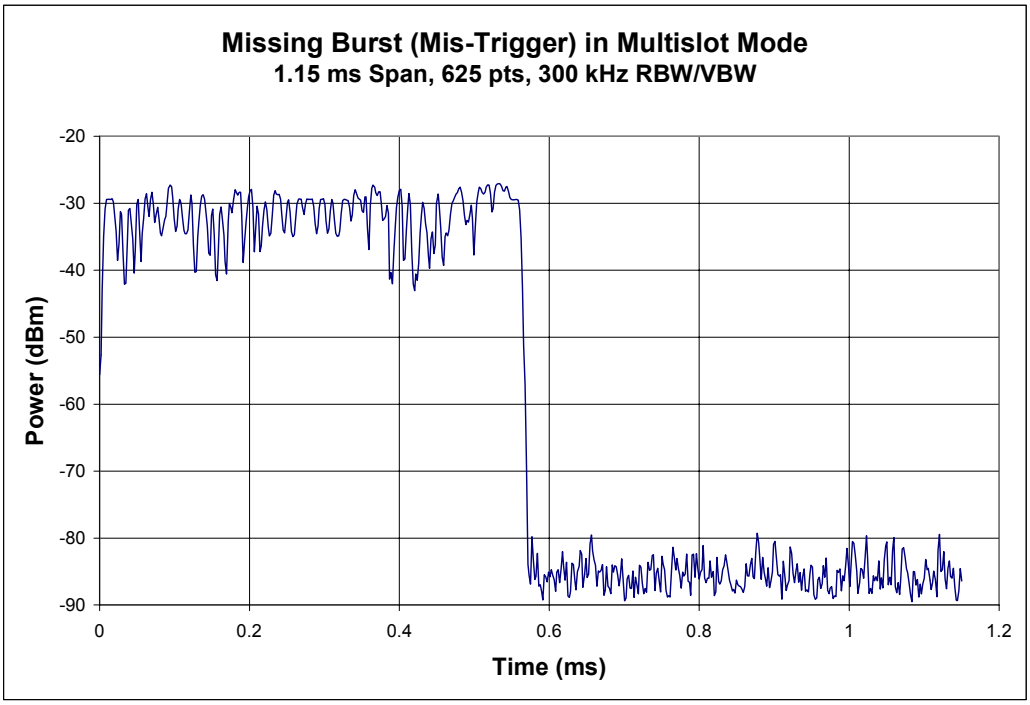

D.6 AMPS

This section was removed for V3.1.

D.7 CDMA

CDMA uses a digital spread spectrum technology for communication. The base station manages power control dynamically by sending binary "up" or "down" signals to maintain the received power at a desired range. Maximum output power is set by sending the "up" bit signal constantly. After a few milliseconds, the device will be at maximum power.

In order to cover the range of the spread spectrum it is necessary to use a wide bandwidth on the front end of the receiver. However, the digital envelope will cause the peak detector to read high (Figure D-13), so it's necessary to use either an RMS or sample detector to get an accurate reading. In a typical spectrum analyzer, the sample detector records one sample from the analog to digital converter (ADC) at each point on the trace. Each trace point represents an instantaneous picture (sample) of the signal level at that point in time. The linear power average of this data provides an acceptable measurement of the average power in the spread spectrum signal. However, the stability of this result is dependent on the number of points measured. The standard deviation of a CDMA sample sweep is typically over 2.5 dB,

resulting in an additional measurement uncertainty between 0.25 to 0.5 dB for a 401-point sample trace. By averaging multiple traces, or using more points per trace, it is possible to reduce this uncertainty. The use of an RMS detector over a sufficient time frame provides a lower noise sweep, since the RMS detector performs the linear power average at each point on the trace for the period of time available to measure that point. Increasing the sweep time allows the RMS detector to average more samples together for each point on the trace.

For the purposes of characterizing antenna performance, it is required to determine the average power of the CDMA envelope for a minimum dwell time of 100 ms. The spectrum analyzer shall be set for zero-span in free-run mode with resolution bandwidth of 3 MHz and a video bandwidth of 10 MHz (3 MHz if 10 MHz VBW is unsupported). Using an RMS detector, the sweep time shall be set to at least 100 ms. When using a sample detector, this time period may be broken up into several smaller sweeps, if desired, to increase the accuracy of the sample average, but the total time of all sweeps shall be at least 100 ms. The received signal must be stable for the entire trace in order to record a valid result. A stable trace is defined as all points within ±0.5 dB of the median value. For the sample detector, the running average of 20% of the total number of points must remain within ±0.5 dB of the median value of the running average. Alternately, the integrated channel power method described in the next section (W-CDMA) may be used, with a channel bandwidth of 1.25 MHz.

If a power meter is used, it shall be capable of measuring the average power of modulated signals with complex modulation formats. The power meter sensor must have a minimum video bandwidth of at least 1.5 MHz. The power meter triggering shall be set to free-run and the sampling time set to 100 ms or greater. The received signal must be stable for the entire trace in order to record a valid result. A stable trace is defined as all points within ±0.5 dB of the median value. Power meters using diode detectors are sampling detectors, and the comments pertinent to sampling detectors in the above paragraph apply to these detectors.

Note: *The maximum signal level of a CDMA EUT often varies by several tenths of a dB over the period of several seconds. For the purposes of a TRP test, this variation averages out over the period of the 242 data points used for the TRP measurement. However, when measured for a single EIRP data point, such as for the purpose of performing one of the alternate measurement methods, the uncertainty of a single data point is likely to be significantly larger than that for the entire TRP measurement. To reduce this particular contribution, it is recommended that multiple sweeps be taken and averaged to determine a more stable power reading.*

Refer to the following figures for examples of CDMA power envelopes resulting from using different detectors and an example of the running average used when the sample detector is used.

FIGURE D-13 COMPARISON OF CDMA POWER ENVELOPE USING PEAK, RMS, AND SAMPLE DETECTORS

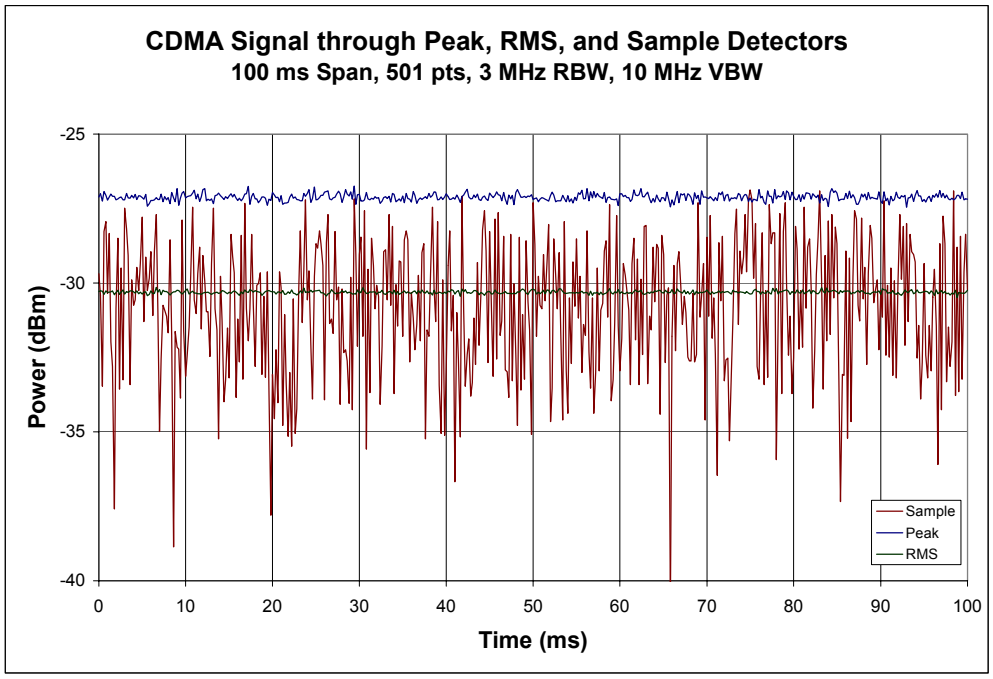

FIGURE D-14 EXAMPLE OF RUNNING AVERAGE USED TO QUALIFY SAMPLE DETECTOR SWEEP

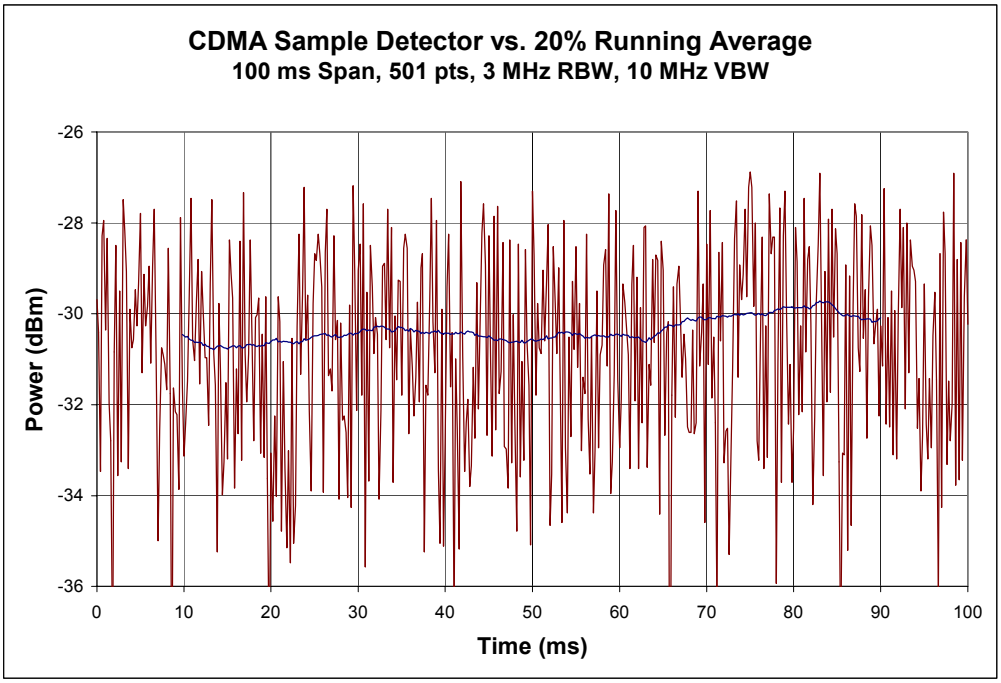

FIGURE D-15 EXAMPLE OF RUNNING AVERAGE WHEN MORE POINTS ARE USED

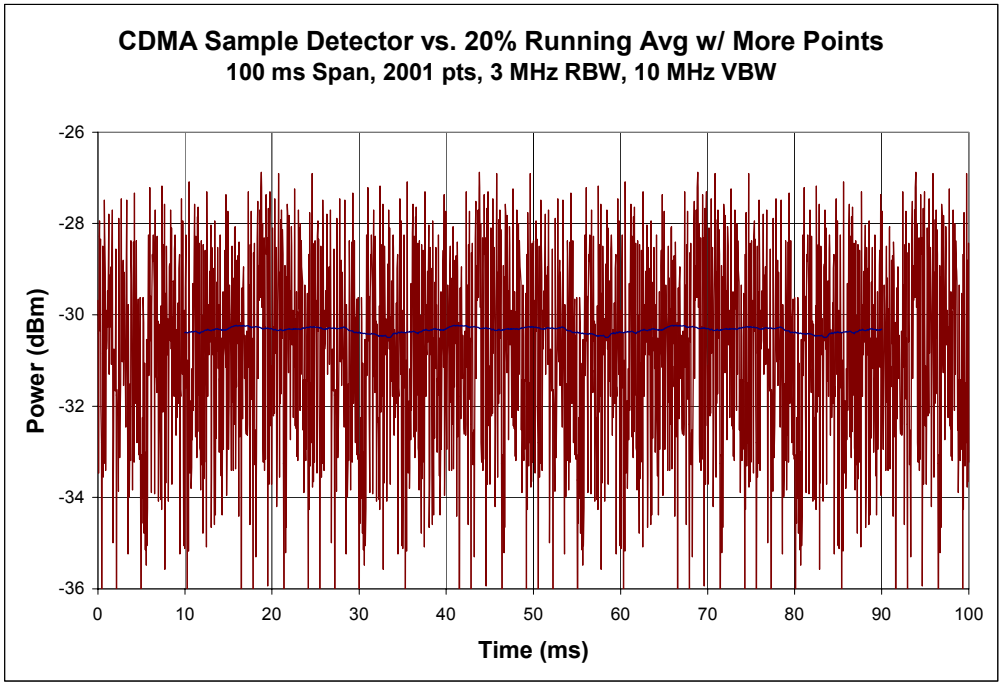

D.8 W-CDMA (UMTS)

Wideband CDMA uses a digital spread spectrum technology for communication. The communication channel is similar to CDMA, but with a wider bandwidth. As with CDMA, the base station can manage power control dynamically by sending binary "up" or "down" signals to maintain the received power at a desired range. Maximum output power is set by sending the "up" bit signal constantly. After a few milliseconds, the device will be at maximum power.

Since many spectrum analyzers are limited to only 3 MHz RBW, a zero-span power measurement is usually not appropriate for this technology. For accurate measurement of wideband CDMA channels using spectrum analyzers with limited bandwidth, an integrated channel power (ICP) measurement must be used to determine the total power in a channel. This is done by scanning the entire channel bandwidth using a narrow resolution bandwidth and then summing the power spectral density (scaled trace data points) across the measured bandwidth. A resolution bandwidth (RBW) from 0.5 to 3.0% of the total bandwidth is typically used to ensure that the band is sampled with sufficient resolution. The following equation is then used to compute the resulting channel power:

EQUATION D.3

$$P = \frac{CBW}{NBW} \times \frac{1}{N} \sum_{i=1}^{N} P_i$$

where P_i is the power of each data point in the trace, represented in linear units, *CBW* is the bandwidth of the channel, *NBW* is the noise bandwidth represented by the measurement of each data point in the trace, *N* is the number of points in the sweep, and *P* is the resulting channel power, again in linear units. Some spectrum analyzers may have this function built in as an optional measurement mode, but it's simple to perform this measurement without needing that additional functionality. The noise bandwidth is roughly equivalent to the resolution bandwidth setting of the spectrum analyzer, however, depending on the shape of the RBW filter implementation in the analyzer, there can be as much as half a dB of deviation between the RBW setting and the NBW needed for the calculation. To address this, we can re-write Equation D.3 to be:

EQUATION D.4

$$P = \frac{CBW}{NBW} \times \frac{1}{N} \sum_{i=1}^{N} P_i = CF_{\frac{RBW}{NBW}} \frac{CBW}{RBW} \times \frac{1}{N} \sum_{i=1}^{N} P_i$$

where *RBW* is the resolution bandwidth used to sweep across the channel, and $CF_{RBW/NBW}$ is a correction factor to correct for the difference between the RBW and NBW. Spectrum analyzer manufacturers embed this correction factor in their internal ICP algorithms, but it's not normally published in a data sheet. See Appendix D.8.1 for direction on how to determine this correction factor directly for any given instrument.

For the purposes of characterizing antenna performance, it is required to determine the integrated channel power of the W-CDMA channel for a minimum sweep time of 100 ms. The spectrum analyzer shall be set for 5 MHz span in free-run mode with resolution bandwidth of 30 kHz and a video bandwidth set to the maximum supported by the spectrum analyzer (3 MHz is the minimum VBW allowed). Using an RMS detector with a sample resolution of 5 µs or better, the sweep time shall be set to at least 100 ms with a minimum of 401 data points per sweep. When using a sample detector, this time period may be broken up into several smaller sweeps, if desired, to increase the accuracy of the sample average, but the total time of all sweeps shall be at least 100 ms. Whether using a sample detector or an RMS detector on a spectrum analyzer with a lower sampling rate, a total of at least 20,000 samples should be averaged across the band. The received signal must be stable for the entire trace in order to record a valid result. A stable trace is defined as a trace where no obvious signal drops to the noise floor are visible and where the running average over 10% of the span follows a smooth profile across the entire bandwidth. Ideally, the running average would remain within ±1.0 dB of the median value over the center 60% of the trace. Note that this last criterion also implies that the trace should be flat across the entire channel. Some EUTs may have bad band filters or notches in the frequency response of their antennas that cause the trace to slope across the

channel bandwidth. It is critical to ensure that any such phenomena are due to the EUT and not due to a bad measurement antenna or other problem with the measurement system.

If a spectrum analyzer supports sufficient resolution bandwidth to accurately measure the broadband WCDMA signal in a zero-span sweep, then it may be used as a broadband power measurement device rather than requiring integrated channel power measurements. For a Gaussian RBW filter shape, the RBW must be at least three times the channel bandwidth to obtain broadband power readings within 0.1 dB of the actual channel power. Newer spectrum analyzers often offer rectangular or flat-top filter options, which typically converge to the correct value when the RBW setting is something greater than 120% of the channel bandwidth. For the purposes of this test plan, broadband power measurements may be performed as described in the previous section for CDMA, using a Gaussian RBW of at least 20 MHz, or a flat top RBW filter of at least 8 MHz, with VBW set to the maximum supported by the spectrum analyzer.

If a power meter is used, it shall be capable of measuring the average power of modulated signals with complex modulation formats. The power meter sensor shall have a minimum video bandwidth of 10 MHz. The power meter triggering shall be set to free-run and the sampling time set to 100 ms or greater. The received signal must be stable for the entire trace in order to record a valid result. A stable trace is defined as all points within ±0.5 dB of the median value. Power meters using diode detectors are sampling detectors, and the comments pertinent to sampling detectors in the preceding paragraphs apply to these detectors.

Refer to the following figures for examples of W-CDMA frequency response traces using RMS and sample detectors and the corresponding running average, as well as an example of a bad sweep.

FIGURE D-16 EXAMPLE OF VALID FREQUENCY RESPONSE TRACE USING RMS DETECTOR

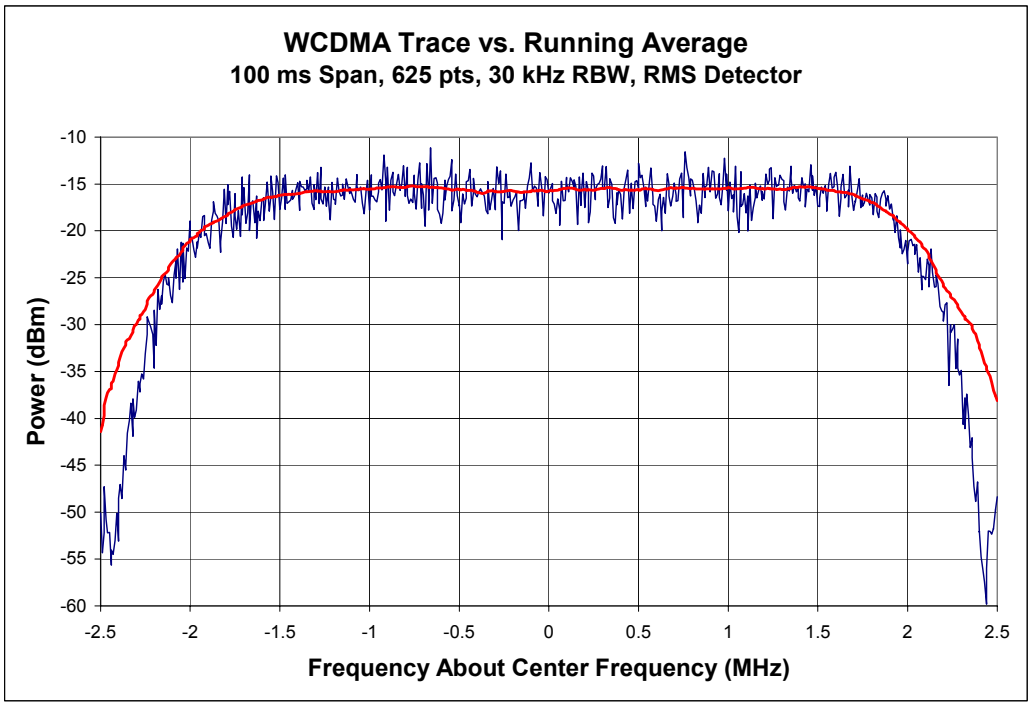

FIGURE D-17 EXAMPLE OF VALID FREQUENCY RESPONSE TRACE USING SAMPLE

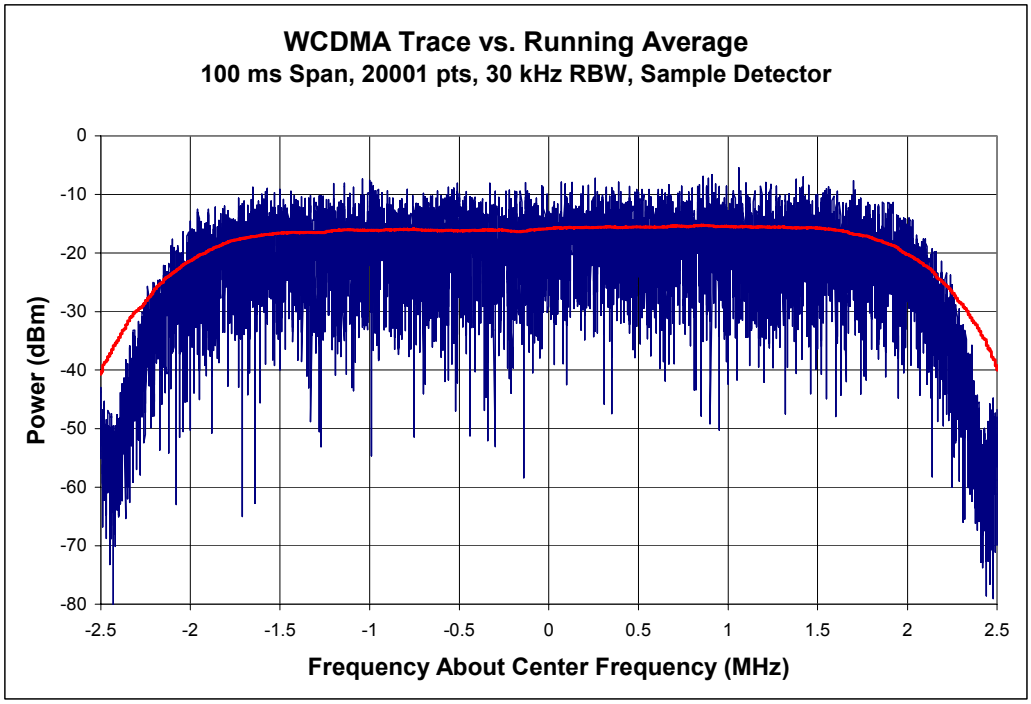

FIGURE D-18 EXAMPLE OF A SIGNAL DROP-OUT DURING AN RMS SWEEP

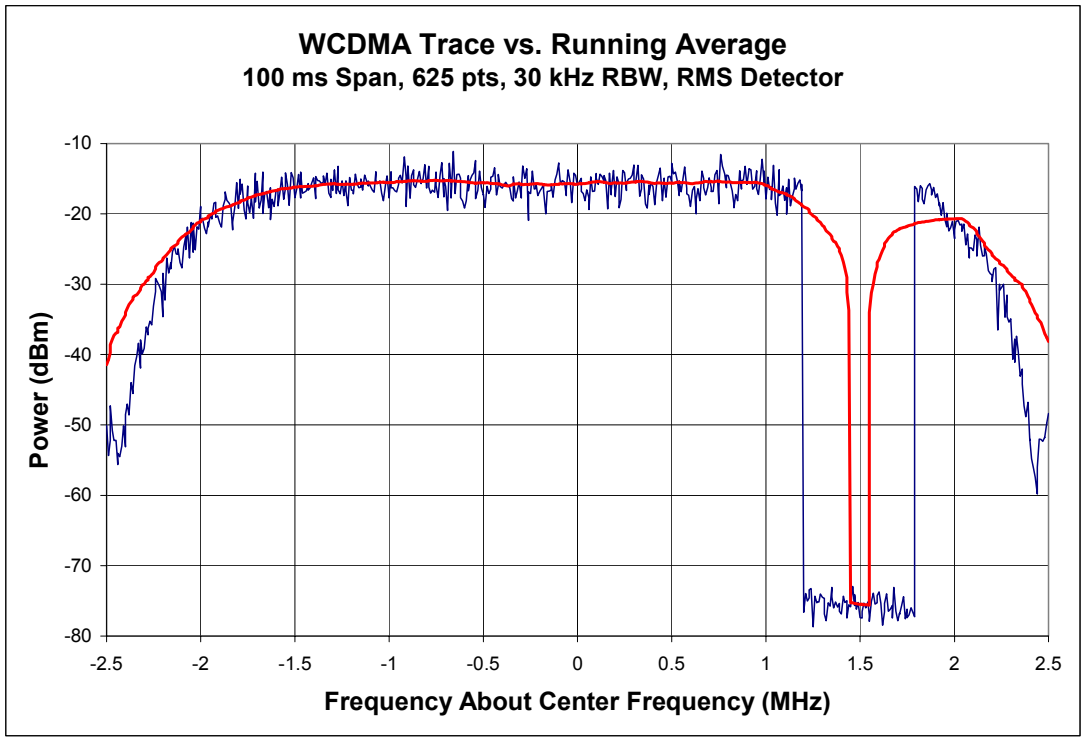

D.8.1 Determining the RBW/NBW Correction Factor

The integrated channel power formula is simply a weighted sum of the power measured in narrow frequency "windows" defined by the bandwidth filter of the spectrum analyzer. The assumption is that each point reports the power measured through a rectangular filter with a width defined by the noise bandwidth (NBW) value. To be statistically valid and capture the entire channel behavior, there must be enough measurement points so that each NBW window for each point touch without any gaps. In reality, however, the number of points are normally chosen such that the NBW overlaps at each point, requiring a weighting factor to average this out. Each point should represent a frequency range given by the channel bandwidth, divided by the total number of points. Thus, the power from each point with a width of *NBW* must be scaled by the factor:

EQUATION D.5

$$\frac{CBW}{NBW} \times \frac{1}{N}$$

Figure D-19 illustrates this concept.

FIGURE D-19 ILLUSTRATION OF THE DIFFERENCE BETWEEN NOISE BANDWIDTH AND DATA POINT WIDTH IN THE INTEGRATED CHANNEL POWER FORMULA

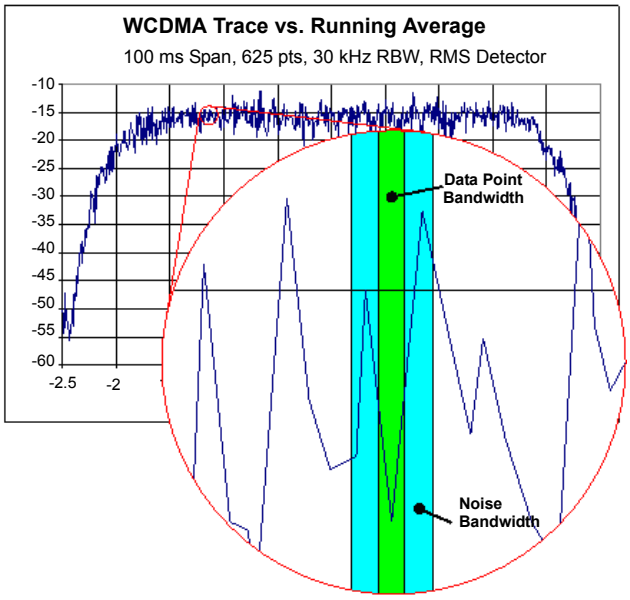

On a physical spectrum analyzer, the resolution bandwidth filter is not a perfect rectangular filter as the noise bandwidth is assumed to be. Rather, the typical RBW filter is a Gaussian filter, where the bandwidth is defined at the half power level of the Gaussian curve.
Figure D-20 illustrates the difference between an ideal Gaussian filter and a rectangular one, plotted on a linear power scale. While the tails of the Gaussian curve that extend outside the rectangular bandwidth are quite similar to the missing area near the peak of the filter, they do not cover the exact same amount of area. The result is that, for a broadband signal, an ideal Gaussian filter will read 0.28 dB higher than a rectangular filter with equivalent half power bandwidth. Thus, to use a Gaussian RBW filter for the integrated channel power calculation, a correction factor must be applied to address the difference in power reading between the applied filter and the desired rectangular filter shape.

Unfortunately, the RBW filters of a spectrum analyzer are never perfect Gaussian filters. The correction factor between RBW and NBW can often be as much as 0.5 dB. Therefore, to obtain a suitable correction factor for use in Equation D.4, it is necessary to determine the difference for the given spectrum analyzer directly. Newer spectrum analyzers may also offer the use of a rectangular or flat top filter shape instead of Gaussian. While this will normally reduce the required correction factor significantly, these filters are also never perfectly rectangular and thus still require some level of correction factor.

FIGURE D-20 COMPARISON OF A GAUSSIAN SHAPED RBW FILTER TO A RECTANGULAR NBW WITH THE SAME FREQUENCY BANDWIDTH

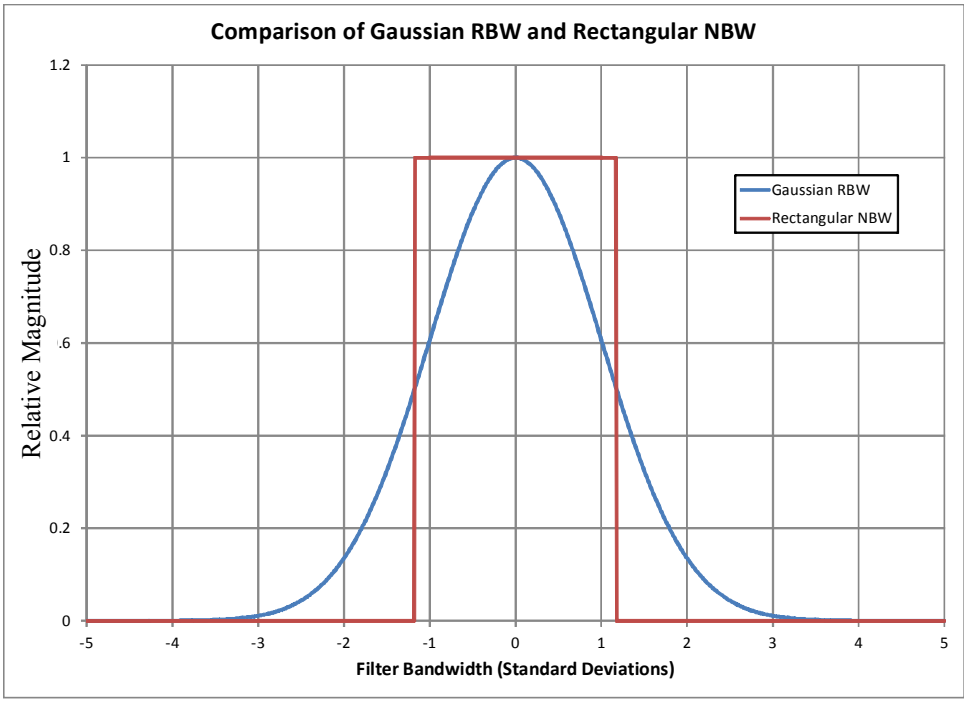

FIGURE D-21 EXAMPLE OF A FLAT TOP FILTER WITH 30 KHZ RBW

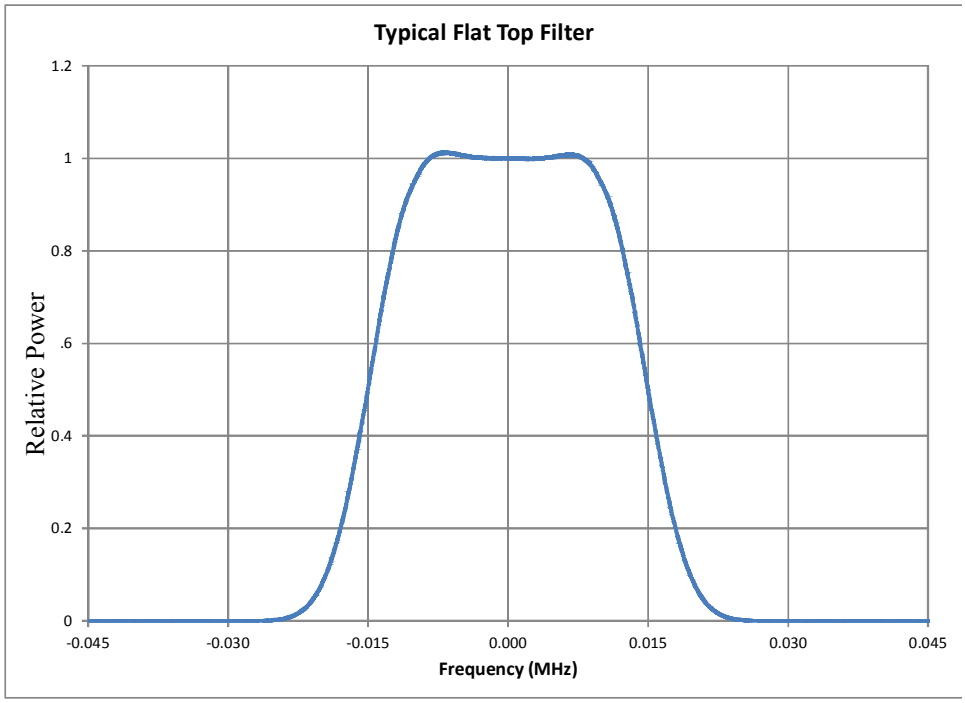

The following procedure may be used to determine the $CF_{RBW/NBW}$ value for use in Equation D.4.

1. Connect the output of a stable CW signal generator to the input of the spectrum analyzer to be evaluated. A 10 MHz reference connection is recommended to ensure that the two instruments are phase and frequency locked.
2. Set the center frequency for both units to 1 GHz (the choice of center frequency is somewhat arbitrary but should be in the range of normal operation of the spectrum analyzer for the target tests.)
3. Set the signal generator level to be approximately 10 dB below the reference level (top of the display window) of the spectrum analyzer.
4. Set the RBW to 30 kHz (or whatever RBW is to be evaluated).
5. Set the VBW to maximum.
6. Set the frequency span to 200 kHz (at least six times the RBW setting)
7. Select the RMS detector.
8. Set the number of sweep points to at least 1001, or the maximum allowed by the spectrum analyzer, but no more than 10,001.
9. Set the sweep time to one second.

10. Take one sweep and record the resulting trace. The shape of the RBW filter should be clearly visible centered in the trace.

11. Convert the trace from dBm to linear power units:

EQUATION D.6

$$P_{Linear} = 10^{P_{dB}/10}$$

12. Normalize the trace by dividing all points by the value at the center frequency. ***Note:*** *If a 10 MHz reference clock is not used, the center of the RBW filter may not appear in the exact center of the trace. For a Gaussian filter, using the maximum point in the trace is usually sufficient. However, for a rectangular/flat top filter where the filter can actually increase to either side of the center frequency, determination of the actual center of the filter is critical.*

13. Sum up the normalized linear trace values. ***Note:*** *This sum is impacted by the noise floor of the analyzer. This calculation assumes the peak is at least 40 dB above the noise floor and the span is not significantly larger than the visible bandwidth, such that the residual terms from the noise floor are negligible in the sum. To determine if there is a detectable impact from the noise, points near the noise floor may be set to zero and the resulting sum compared to the original.*

14. Determine the frequency step size of the trace by dividing the frequency span by the number of trace points minus one.

15. The correction factor is then given by:

EQUATION D.7

$$CF_{\frac{RBW}{NBW}} = \frac{RBW}{f_{StepSize}} \times \frac{1}{Sum}$$
$$= \frac{RBW}{F_{Span}} \times \frac{N-1}{\sum_{i=1}^{N} P_{Norm\,i}}$$

where RBW is the selected resolution bandwidth, $f_{StepSize}$ is the frequency step size of the trace, Sum is the sum of the normalized linear trace values, F_{Span} is the frequency span of the trace, N is the number of points in the trace, and P_{Normi} are the individual normalized linear power trace points.

16. The correction factor may be converted to dB to allow it to be added directly to a resulting ICP result in dBm, where the RBW is used in place of NBW.

EQUATION D.8

$$CF_{dB} = 10 \times \log 10\left(CF_{\frac{RBW}{NBW}} \right)$$

D.9 LTE

LTE uses SC-FDMA to produce a digital spread spectrum where specific sub-channels may be used or unused depending on the configuration information provided by the eNodeB base station. Thus, the occupied bandwidth is configurable by the number of specified resource blocks (RBs) independent of the actual channel bandwidth, allowing multiple UEs to share one channel. Each resource block is 180 kHz wide (200 kHz including guard intervals). The current TRP requirements specify sub-channel bandwidths of 12 RBs or 2.4 MHz for 10 MHz channels, 8 RBs or 1.6 MHz for 5 MHz channels, including a suitable guard band. While there are a number of different power control options for LTE, the test plan expects maximum power to be produced by sending the "up" command constantly. After a few hundred milliseconds, the device will be at maximum power.

LTE supports two frame structure types to enable both FDD and TDD modes of operation. Both types of frame are 10 ms in duration and consist of 10 subframes of 1 ms duration (see TS 36.211). In TDD mode, the frame can be divided into two half frames, with one special subframe per frame or half frame to facilitate downlink to uplink switching. A number of subframe and special subframe configurations are supported. The uplink period of the special subframe cannot be used for user plane data (PUSCH). Thus, under the default subframe configuration specified in TS 36.508, the UE will be transmitting 2 ms bursts every 5 ms to transport user plane data in PUSCH.

For the purposes of characterizing antenna performance, the integrated channel power may be determined using the technique described in Appendix D.8 for WCDMA, or using a broadband power sweep as described in Appendix D.7 for CDMA, with the following modifications. For integrated channel power, a channel bandwidth of 2.4 MHz shall be used (assuming 12 RBs allocated), centered on the occupied bandwidth defined by the resource block allocation. A stable trace should be flat to within ±1.0 dB of the midpoint value for a 10% running average across the center 70% of the trace. For broadband power mode, the spectrum analyzer shall be set to at least the appropriate minimum RBW specified in Table D-1, centered on the occupied bandwidth defined by the resource block allocation, with VBW set to maximum. A stable trace is defined as all points within ±0.5 dB of the midpoint value. In either case, the required frequency offsets specified in Table D-1 may be determined generally as (RBStart + (RBAllocation - Total RBs) / 2) * 0.18 MHz.

TABLE D-1 BROADBAND POWER MODE MEASUREMENT REQUIREMENTS

Channel BW	RB allocation	Subchannel BW (inc. guard band)	Minimum RBW	RB start	Frequency offset
5 MHz	8	1.6 MHz	4 MHz	0	-1.53 MHz
				8	-0.09 MHz
				17	+1.53 MHz
10 MHz	12	2.4 MHz	8 MHz	0	-3.42 MHz
				19	0.0 MHz
				38	+3.42 MHz
20 MHz	18	3.6 MHz	8 MHz	0	-7.38 MHz
				41	0.0 MHz
				82	+7.38 MHz

Note: *The Subchannel BW, including guard band, may be reconsidered in future versions as scaling guard band requirements with number of RBs may not be appropriate.*

If a power meter is used, it shall be capable of measuring the average power of modulated signals with complex modulation formats. The power meter sensor shall have a minimum video bandwidth of 10 MHz. The power meter triggering shall be set to free-run and the sampling time set to 100 ms or greater. The received signal must be stable for the entire trace in order to record a valid result. A stable trace is defined as all points within ±0.5 dB of the median value. Power meters using diode detectors are sampling detectors, and the comments pertinent to sampling detectors in the preceding paragraphs apply to these detectors.

In addition, for the case of measurements with the TDD frame structure, the broadband power measurement is the linear average of the center 95% of the 2ms burst and the measurement shall be triggered in order to synchronize the measurement with the burst. If a power meter is used, it must be capable of triggering from and measuring the average power of multiple bursts of modulated signals with complex modulation formats.

Refer to the following figures for examples of LTE frequency response traces for various configurations.

FIGURE D-22 EXAMPLE OF VALID LTE FREQUENCY RESPONSE TRACE USING RMS DETECTOR.

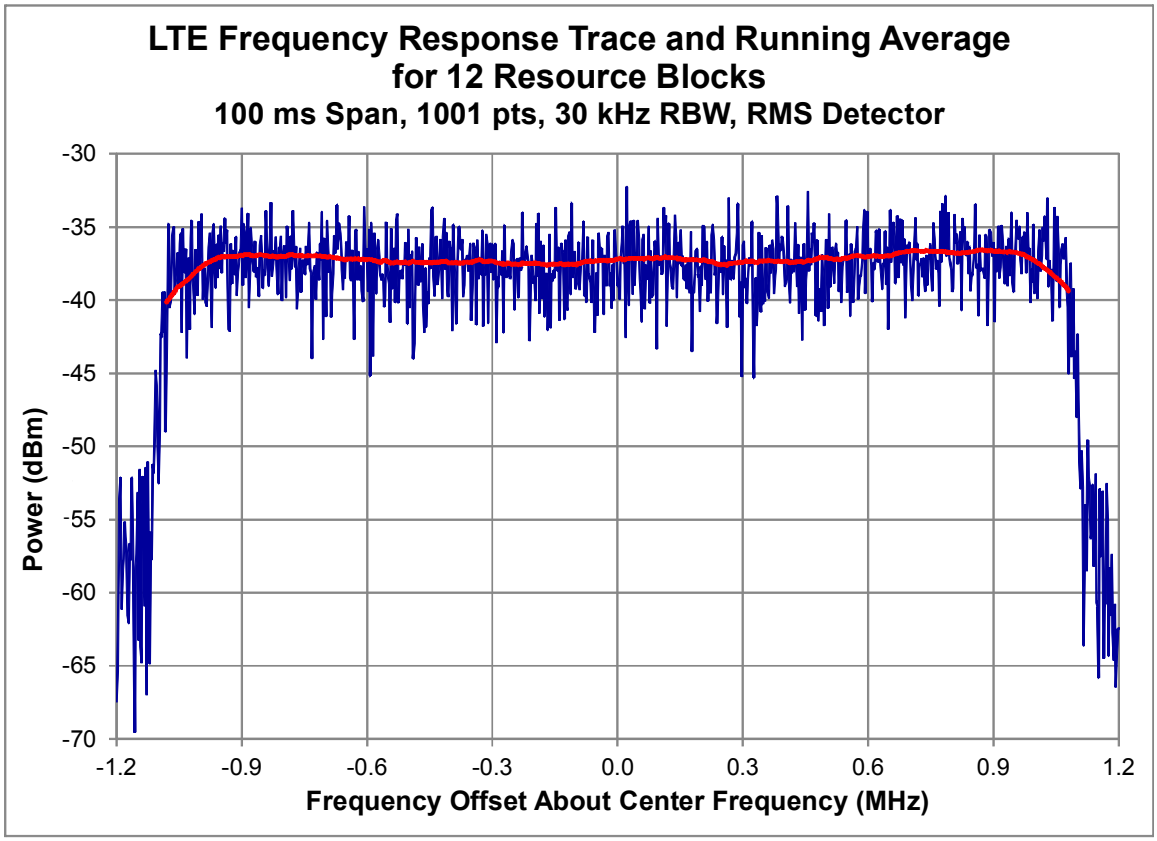

FIGURE D-23 EXAMPLE OF VALID LTE WIDEBAND TIME RESPONSE TRACE USING RMS DETECTOR

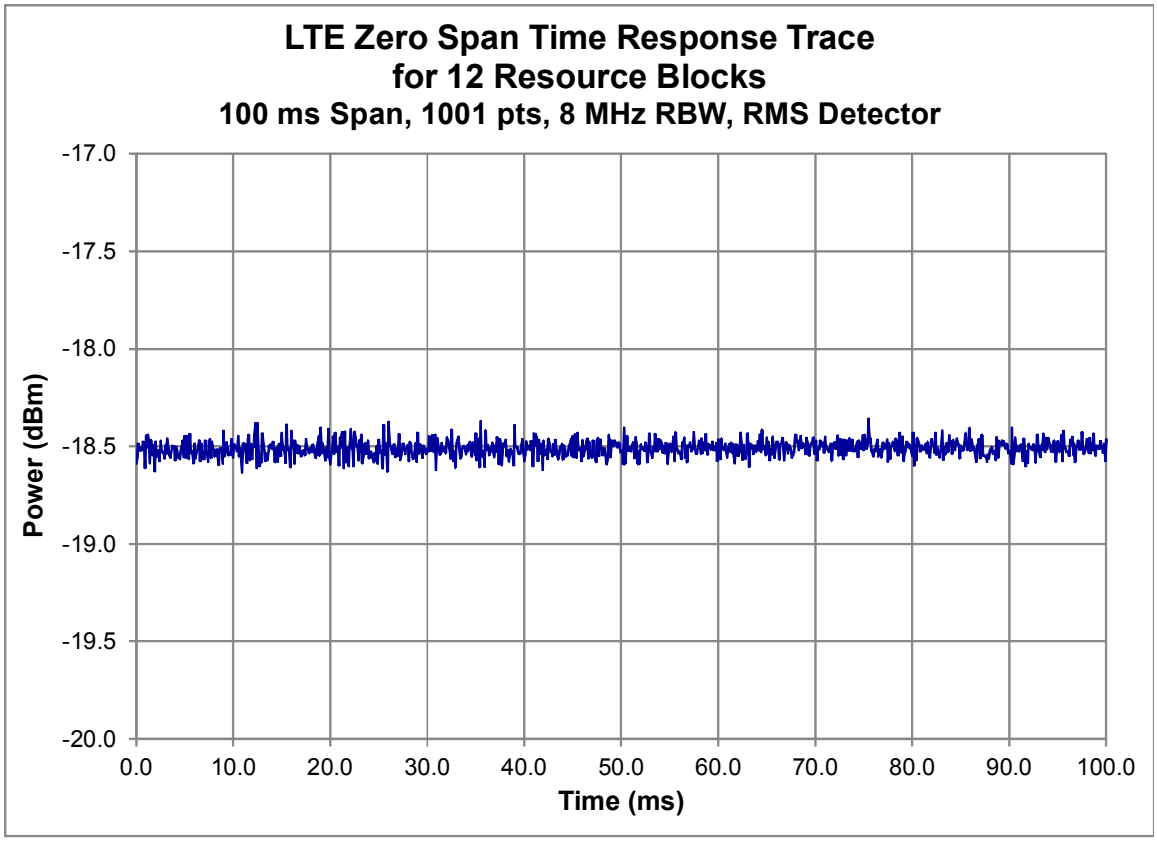

Appendix E Total Isotropic Sensitivity and Total Radiated Power Derivations (Informative)

This appendix describes a way of reducing complete spherical patterns of receive-sensitivity or effective isotropic radiated power data to single figures of merit, and to give some meaningful examples of this process. The basic principle applied is to compare the EUT's performance to that of a transceiver with a perfect (100% efficient) antenna.

E.1 Total Isotropic Sensitivity

FIGURE E-1 TIS

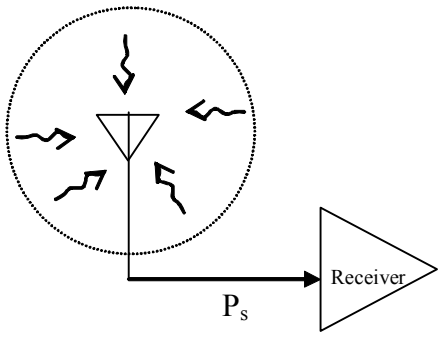

Definitions

This subsection utilizes Yeh's derivation of average received power in the mobile environment as described in Jakes' *Microwave Mobile Communications* [5]. While some equations from that derivation are reproduced here for clarity, the reader is referred to that source for its complete development.

Assume a hypothetical scattered environment which provides equal mean incident powers [6] in both of the orthogonal components E_θ and E_ϕ, and a uniform distribution of angle of incidence (across all θ,ϕ) for both polarizations. Now assume the mean incident powers for both polarizations are simultaneously adjusted (while held equal to one another) so that the average power available to the EUT's receiver from the EUT's antenna when immersed in this environment[7] is equal to the power required for the receiver to operate at its threshold of sensitivity (e.g., a specified bit error rate). If the EUT were now replaced with an ideal isotropic antenna which has equal gain in each linear polarization E_θ and E_ϕ, in every direction, the mean power available from the ideal isotropic antenna immersed in this same scattered environment is defined as the **Total Isotropic Sensitivity**[8], **TIS**, expressed in Watts.

Define the Effective Isotropic Sensitivities, EIS, as follows:

$EIS_\theta(\theta,\phi)$ = Power available from an ideal isotropic, Theta-polarized antenna generated by the Theta-polarized plane wave incident from direction (θ,ϕ) which, when incident on the EUT, yields the threshold of sensitivity performance.

$EIS_\phi(\theta,\phi)$ = Power available from an ideal isotropic, Phi-polarized antenna generated by a Phi-polarized plane wave incident from direction (θ,ϕ) which, when incident on the EUT, yields the threshold of sensitivity performance.

EIS is the pattern quantity that is actually measured in the chamber during the EUT Measurement Part, by recording power required at each angle and polarization to achieve sensitivity, and is expressed in Watts. It is determined by including the same path-loss factor (as measured at the receive frequency instead of the transmit frequency) that is used in the chamber to yield EIRP for a transmitting antenna. Note that the EIS terms are defined with respect to a single-polarized ideal isotropic antenna, but the TIS is defined with respect to a dual-polarized ideal isotropic antenna. This is a convenience to make the path loss characterization procedure (i.e., the Range Reference Measurement) for receive measurements in the chamber correspond with the path loss characterization procedure done for EIRP. That is to say, the same type of path loss terms, recorded at the appropriate receive frequency, that are generated in the Range Reference Measurement to yield EIRP patterns for a transmit test will yield EIS patterns for a receive test as defined here (based on single-polarized isotropic references). TIS is based on a dual-polarized isotropic comparison, because real-world EUTs and propagation are dual-polarized. Proper choice of integration kernels will be seen to reconcile this apparent difference.

7. Most correctly, “immersed in the environment” means the EUT is moved randomly through the (assumed stationary) environment so as to accomplish this averaging of the incident power. In this section, “immersion” is used as shorthand for this hypothetical movement process.
8. This is a sensible definition because it compares the EUT's antenna/receiver system to a perfect, 100% efficient antenna that responds equally to either polarization.

In general, it will be seen that

EQUATION E.1

$$EIS_x(\theta,\phi) = \frac{P_S}{G_{x,EUT}(\theta,\phi)} \ ,$$

where P_S is the radiated sensitivity of the EUT's receiver and $G_{x,EUT}(\theta,\phi)$ is the relative isotropic gain (in polarization x) of the EUT's antenna (in this case, including mismatch and ohmic losses) in the direction (θ,ϕ). Radiated sensitivity corresponds to the minimum signal power at the radio receiver's input (antenna's output) required to meet the airlink's minimum performance criterion (typically expressed in terms of bit, block or frame error rate). The radiated sensitivity can differ from that found in a conducted test due to interaction factors such as self-desensitization and other non-linear behaviors.

Calculation of Received Power

Following Yeh's derivation of average received power, a right-hand spherical coordinate system (θ,ϕ,r) is utilized, where: $\hat{a}_\theta$ and $\hat{a}_\phi$ are orthogonal unit vectors associated with θ and ϕ. In the general case, the average power received by an antenna in a scattered environment is (equation 3.1-22 of Jakes):

$$P_{rec} = \oint\left[P_1 G_\theta(\Omega)P_\theta(\Omega) + P_2 G_\phi(\Omega)P_\phi(\Omega)\right]d\Omega \ ,$$

where Ω is the coordinate point on a spherical surface given by (θ,ϕ), and $d\Omega$ is the differential element of solid angle, $\sin(\theta)d\phi d\theta$. This is equivalently written as:

EQUATION E.2

$$P_{rec} = \oint\left[P_1 G_\theta(\theta,\phi)P_\theta(\theta,\phi) + P_2 G_\phi(\theta,\phi)P_\phi(\theta,\phi)\right]\sin(\theta)d\phi d\theta$$

$G_\theta(\theta,\phi)$ and $G_\phi(\theta,\phi)$ are the power gain patterns for the θ and ϕ polarizations, respectively, of the antenna, and $P_\theta(\theta,\phi)$ and $P_\phi(\theta,\phi)$ are the angular density functions of incoming plane waves having θ and ϕ polarizations, respectively, for the environment. P_1 and P_2 are, respectively, the average powers that would be received by a θ- or ϕ-polarized ideal isotropic antenna in the scattered environment.

$P_\phi(\theta,\phi)$ are constants equal to $\frac{1}{4\pi}$ (yielding a uniform distribution of angle of incidence), and P_1 is equal to P_2 . Specifically, P_1 and P_2 are equal to that particular value P_{TIS} which yields the condition of the EUT being at the specified threshold of sensitivity in the hypothetical scattered environment, or $P_1 = P_2 = P_{TIS}$.

For the case of the EUT under these conditions, the mean power delivered by its antenna to its receiver when immersed in this same scattered environment is, by definition, the receiver's sensitivity power, P_S, so that Equation E.2 becomes:

EQUATION E.3

$$P_S = \frac{P_{TIS}}{4\pi} \oint \left[G_{\theta,EUT}(\theta,\phi) + G_{\phi,EUT}(\theta,\phi) \right] sin(\theta) d\phi d\theta \,,$$

for the EUT which has antenna gain patterns $G_{x,EUT}(\theta,\phi)$ and is immersed in the scattered environment.

The ideal isotropic dual-polarized antenna envisioned in the definition of TIS would have a total power gain in every direction of 1 (that is, 0 dBi). Therefore, its component gains in each polarization in every direction are 1/2 (that is, -3 dBi), $G_\theta(\theta,\phi) = G_\phi(\theta,\phi) = 1/2$. Hence, substituting into, the average received power for the dual-polarized isotropic antenna in the described environment, TIS, is seen to be:

EQUATION E.4

$$TIS = \oint \left[P_{TIS} \cdot \frac{1}{2} \cdot \frac{1}{4\pi} + P_{TIS} \cdot \frac{1}{2} \cdot \frac{1}{4\pi} \right] sin(\theta) d\phi d\theta = \frac{P_{TIS}}{4\pi} \oint sin(\theta) d\phi d\theta = P_{TIS}$$

Turning to the EIS definitions, for example that of $EIS_\theta(\theta,\phi)$, Equation E.1 can also be justified. The $EIS_\theta(\theta,\phi)$ measurement refers to an average received power with a single, θ-polarized plane wave incident on the EUT from a particular direction (θ,ϕ). As shown by Taga, this particular case can also be treated using Equation E.2 by setting:

$$P_\theta(\theta,\phi) = \frac{\left[\delta(\theta-\theta_S)\delta(\phi-\phi_S)\right]}{\sin(\theta)} \quad \text{and} \quad P_\phi(\theta,\phi) = 0 \quad ,$$

where $\delta(x)$ is the dirac delta function and (θ_S,ϕ_S) represents a particular direction for which the EIS is being evaluated. Substituting into Equation E.2 for the EIS case (and recalling that the received power in this case is defined to be the sensitivity power, P_S), we have:

$$P_S = \oint \left[P_{1,EIS} G_{\theta,EUT}(\theta,\phi) \frac{\left[\delta(\theta-\theta_S)\delta(\phi-\phi_S)\right]}{sin(\theta)} + 0 \right] sin(\theta) d\phi d\theta = P_{1,EIS} G_{\theta,EUT}(\theta_S,\phi_S) \,,$$

where $P_{1,EIS}$ is just the mean incident power constant that yields the threshold of sensitivity for the EUT at the angle (θ_S,ϕ_S).

For the θ-polarized ideal isotropic antenna envisioned in the definition of EIS_θ (θ,ϕ), its gain function is G_θ (θ,ϕ) = 1 (that is, 0 dBi) and G_ϕ (θ,ϕ) = 0. Similarly substituting these into Equation E.2 yields:

$$EIS_\theta(\theta_S,\phi_S) = \oint\left[P_{1,EIS}\cdot 1\cdot\frac{[\delta(\theta-\theta_S)\delta(\phi-\phi_S)]}{sin(\theta)}+0\right]sin(\theta)d\phi d\theta = P_{1,EIS}$$

Combining these last two equations, we have:

$$P_S = EIS_\theta(\theta_S,\phi_S)G_{\theta,EUT}(\theta_S,\phi_S)\ ,$$

for the particular evaluation point (θ_S, ϕ_S), or more generally for the function at any angle,

$$P_S = EIS_\theta(\theta,\phi)G_{\theta,EUT}(\theta,\phi)$$

A similar development would yield the analogous expression for EIS_ϕ (θ,ϕ), and these two results lead directly to Equation E.1.

Hence, we can rearrange Equation E.1 so that:

$$G_{x,EUT}(\theta,\phi) = \frac{P_S}{EIS_x(\theta,\phi)}$$

Substituting into Equation E.3 yields:

$$P_S = \frac{P_{TIS}}{4\pi}\oint\left[\frac{P_S}{EIS_\theta(\theta,\phi)}+\frac{P_S}{EIS_\phi(\theta,\phi)}\right]sin(\theta)d\phi d\theta$$

This can be rearranged to yield:

$$P_{TIS} = \frac{4\pi}{\oint\left[\frac{1}{EIS_\theta(\theta,\phi)}+\frac{1}{EIS_\phi(\theta,\phi)}\right]sin(\theta)d\phi d\theta}$$

Substituting this into Equation E.4 yields:

EQUATION E.5

$$TIS = \frac{4\pi}{\oint\left[\frac{1}{EIS_\theta(\theta,\phi)}+\frac{1}{EIS_\phi(\theta,\phi)}\right]sin(\theta)d\phi d\theta}$$

Results for a few Special Cases

Assume that the receiver, environment, and antenna are all at the same temperature, e.g., 290K.

Case 1: The EUT employs a 100% efficient, single-polarized, ideal isotropic radiator: For example, assume the EUT's antenna is an ideal, Theta-polarized isotropic antenna. By definition, $EIS_\theta(\theta,\phi)$ is then P_s for every angle, and $EIS_\phi(\theta,\phi)$ is infinite at every angle.

Then Equation E.5 becomes:

$$TIS = \frac{4\pi}{\oint\left[\frac{1}{P_S}+\frac{1}{\infty}\right]sin(\theta)d\phi d\theta} = \frac{4\pi}{\oint\left[\frac{1}{P_S}+0\right]sin(\theta)d\phi d\theta} = \frac{P_S 4\pi}{\oint sin(\theta)d\phi d\theta} = P_S$$

In other words, TIS of an EUT with a 100% efficient, ideal isotropic, single-polarized antenna is just the sensitivity power, P_s.

Case 2: The EUT employs a 100% efficient, dual-polarized, ideal isotropic radiator: $EIS_\theta(\theta,\phi)$ is then $2P_s$ for every angle, and $EIS_\phi(\theta,\phi)$ is also $2P_s$ at every angle. (Recall that the EIS is defined with respect to a single-polarized isotropic, and a dual-polarized isotropic antenna must have half the gain in each polarization of a corresponding single-polarized isotropic antenna.) Then Equation E.5 becomes:

$$TIS = \frac{4\pi}{\oint\left[\frac{1}{2P_S}+\frac{1}{2P_S}\right]sin(\theta)d\phi d\theta} = \frac{P_S 4\pi}{\oint sin(\theta)d\phi d\theta} = P_S$$

Again, an EUT with a 100% efficient, ideal isotropic antenna has a TIS that is equal to the conducted sensitivity of the receiver, P_s.

Case 3: The EUT employs a 50% efficient but otherwise ideal, single-polarized isotropic antenna. $EIS_\theta(\theta,\phi)$ is then $2P_s$ for every angle (the antenna is a 3 dB attenuator, degrading the receiver noise figure by 3 dB, so twice the power is required to get the same performance), and $EIS_\phi(\theta,\phi)$ is infinite at every angle. Thus, Equation E.5 becomes:

$$TIS = \frac{4\pi}{\oint\left[\frac{1}{2P_S}+\frac{1}{\infty}\right]sin(\theta)d\phi d\theta} = \frac{4\pi}{\oint\left[\frac{1}{2P_S}+0\right]sin(\theta)d\phi d\theta} = \frac{2P_S 4\pi}{\oint sin(\theta)d\phi d\theta} = 2P_S$$

Therefore, an EUT with a 50% efficient antenna has a TIS equal to the conducted sensitivity degraded by 3 dB (i.e., twice as large).

This supports two general conclusions. First, the lower limit (best achievable value) for TIS is simply the conducted sensitivity of the EUT's receiver, P_S. This TIS is achieved with a perfectly matched, 100% efficient antenna. Second, the TIS of a real antenna will be the conducted sensitivity of its receiver degraded by the mismatch/efficiency loss of the antenna.

E.2 Total Radiated Power

FIGURE E-2 TRP

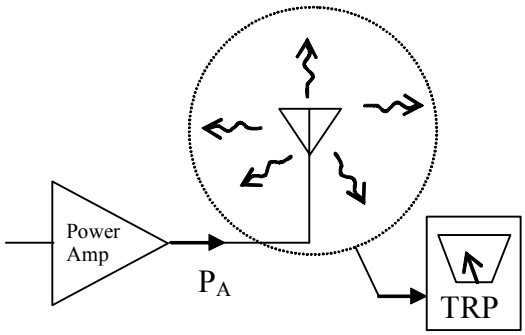

Definitions

P_A = Power delivered to the antenna (properly, the power available to the actual antenna load), in W

TRP = Total Radiated Power, the power that is actually radiated by the antenna, in W

The TRP is the sum of all power radiated by the antenna, regardless of direction or polarization. If the antenna were enclosed in a perfectly absorbing sphere, the TRP would be the power that would be absorbed by that sphere. TRP can be related to P_A in this fashion:

EQUATION E.6

$$TRP = P_A \cdot eff$$

Where

eff = Radiation efficiency of the antenna

The radiation efficiency, *eff*, is defined in most antenna textbooks [7] as the ratio of the power radiated by an antenna to the power delivered to the antenna. The power delivered to the antenna may differ from the output of the power amplifier into a 50 ohm load due not only to antenna mismatch, but also any non-linear interaction factors induced in the active circuitry.

Derivation of Total Radiated Power

The Total Radiated Power of a given antenna and source is (see, for example, Stutzman & Thiele, page 33, equation 1-131):

$$TRP = \oint U(\theta,\phi)d\Omega ,$$

Where $U(\theta,\phi)$ = radiation intensity at each angle in Watts/steradian.

Expanding this integral,

$$TRP = \int_{\theta=0}^{\pi}\int_{\phi=0}^{2\pi} U(\theta,\phi)\sin(\theta)d\phi d\theta$$

It is seen that the sin (θ) term results simply from the mathematical expansion of the differential element of solid angle, $d\Omega$.

$$d\Omega = \sin(\theta)d\phi d\theta ,$$

The effective isotropic radiated power, EIRP, is defined as (Stutzman & Thiele, page 62, equations 1-226 and 1-227):

$$EiRP(\theta,\phi) = P_T G_T(\theta,\phi) = 4\pi U(\theta,\phi) ,$$

Where $P_T G_T$ is the product of the power delivered to the antenna and the antenna's power gain. (The equation cited in the reference is actually for the specific case of peak EIRP at the angle of maximum gain, but the reasoning used in the reference produces the above equation for the more general EIRP vs. angle function.)

Then we have:

$$U(\theta,\phi) = \frac{EiRP(\theta,\phi)}{4\pi} ,$$

And the integral for TRP becomes:

EQUATION E.7

$$TRP = \frac{1}{4\pi}\int_{\theta=0}^{\pi}\int_{\phi=0}^{2\pi} EiRP(\theta,\phi)\sin(\theta)d\phi d\theta$$

Thus, if the complete spherical pattern of the EIRP of the EUT is integrated with the sin (θ) weighing as described in this equation, the result will be the total power the EUT is radiating.

It should be noted here that this integration would be modified to yield the same total radiated power if the pattern measurement is expressed in terms of ERP (effective radiated power referenced to a half-wave dipole) rather than EIRP. Specifically, ERP is numerically 2.14 dB less than EIRP:

$$ERP(\theta,\phi) \cong \frac{EiRP(\theta,\phi)}{1.64},$$

so that:

$$TRP \cong \frac{1.64}{4\pi} \int_{\theta=0}^{\pi} \int_{\phi=0}^{2\pi} ERP(\theta,\phi)\sin(\theta)\,d\phi\,d\theta$$

It must be emphasized that, whether the pattern data itself is taken in the form of ERP or EIRP, use of the appropriate integration will yield numerically the same TRP (as well it should-the EUT is radiating the same power in either case).

In practice, the total EIRP will likely be measured at each sample point by measuring its two orthogonally polarized components, $EIRP_{\theta}(\theta,\phi)$ and $EIRP_{\phi}(\theta,\phi)$. To accommodate this measurement practicality, we can split the radiation intensity at each angle into two contributions, one from each polarization (power in independent components simply adds):

$U_{\theta}(\theta,\phi)$ = Radiation intensity due to Theta component of E-field
$U_{\phi}(\theta,\phi)$ = Radiation intensity due to Phi component of E-field

Then Equation E.7 can be re-derived as:

EQUATION E.8

$$TRP = \frac{1}{4\pi} \int_{\theta=0}^{\pi} \int_{\phi=0}^{2\pi} (EiRP_{\theta}(\theta,\phi) + EiRP_{\phi}(\theta,\phi))\sin(\theta)\,d\phi\,d\theta$$

E.3 Conversion of Integrals to Summations of Discretely Sampled Pattern Data

It can be seen that both the TIS and TRP expressions [Equation E.5 and Equation E.8] involve integrals of the form.

EQUATION E.9

$$I = \frac{1}{4\pi} \int_{\theta=0}^{\pi} \int_{\phi=0}^{2\pi} K(\theta,\phi)\sin(\theta)\,d\phi\,d\theta$$

where K is some function of Theta and Phi. This subsection treats the manner in which equations of this form are to be approximated as summations of discrete data that is gathered on a uniform grid in Theta and Phi. This leads to the figure of merit expressions given in Appendix B.

As described in Section 2 of this test plan, measurements may be taken with different positioner systems that gather data in different orders. For example, a conic-cut system might increment Theta in the nominal range of 0 to 180 degrees (0 to π radians), and record a complete scan of Phi from 0 to 360 degrees (0 to 2π radians) at each Theta increment, while a great-circle-cut system might increment Phi in the range of 0 to 180 degrees, and record a complete rotation of Theta from 0 to 360 degrees at each Phi increment. However, both systems will record measurements at the same points relative the EUT or head phantom, as described in Section 2 and Appendix A. Hence, regardless of the order in which the data are actually gathered, they can be recast into the standard nominal ranges of Theta from 0 to 180 degrees (0 to π radians) and Phi from 0 to 360 degrees (0 to 2π radians) that correspond to the standard right-hand spherical coordinate system. Such a data set is the starting point for the development in this subsection.

Assume that data are available at uniform angular intervals in Theta and Phi. There are N intervals in Theta from 0 to π radians, and M intervals in Phi from 0 to 2π radians. Let i be the index variable used to denote the Theta measurement points (i ranges from 0 to N), and j be the index variable used to denote the Phi measurement points (j ranges from 0 to M). A given angle (sample point) is then specified as (θ_i, ϕ_j), with $(\theta_0, \phi_0) = (0, 0)$ and $(\theta_N, \phi_M) = (\pi, 2\pi)$. N and M are chosen, depending on the type of test, to yield the correct angular intervals specified in the test plan. For transmit testing, the angular interval is specified as 15 degrees, so N is 180/15 = 12 and M is 360/15 = 24. For receive testing, the angular interval is specified as 30 degrees, so N is 180/30 = 6 and M is 360/30 = 12. In summary:

N = number of angular intervals in the nominal Theta range from 0 to π

M = number of angular intervals in the nominal Phi range from 0 to 2π

i = index for each Theta sample, i ranges from 0 to N

j = index for each Phi sample, j ranges from 0 to M

Then the Theta and Phi intervals are:

EQUATION E.10

$$\Delta\theta = \theta_i - \theta_{i-1} = \frac{\pi}{N}$$

$$\Delta\phi = \phi_j - \phi_{j-1} = \frac{2\pi}{M}$$

Returning now to Equation E.9, the inner (Phi) integral can be approximated using the trapezoidal rule [8] as

$$I \cong \frac{1}{4\pi}\int_{\theta=0}^{\pi}\frac{\Delta\phi}{2}\sum_{j=0}^{M-1}\left[K(\theta,\phi_j)+K(\theta,\phi_{j+1})\right]\sin(\theta)d\theta$$

This is rearranged in the conventional fashion as

$$I \cong \frac{1}{4\pi}\int_{\theta=0}^{\pi}\left[\Delta\phi\sum_{j=1}^{M-1}K(\theta,\phi_j)+\frac{\Delta\phi}{2}\left[K(\theta,\phi_0)+K(\theta,\phi_M)\right]\right]\sin(\theta)d\theta$$

Since $\phi_0 = 0$ and $\phi_M = 2\pi$, $K(\theta,\phi_0) = K(\theta,\phi_M)$ and the redundant measurement at ϕ_M need not be taken. The summation also then reduces to:

$$I \cong \frac{\Delta\phi}{4\pi}\int_{\theta=0}^{\pi}\sum_{j=0}^{M-1}K(\theta,\phi_j)\sin(\theta)d\theta$$

Applying the trapezoidal approximation now to the Theta integration:

$$I \cong \frac{\Delta\phi}{4\pi}\left\{\Delta\theta\sum_{i=1}^{N-1}\sum_{j=0}^{M-1}K(\theta_i,\phi_j)\sin(\theta_i)+\frac{\Delta\theta}{2}\left[\sum_{j=0}^{M-1}K(\theta_0,\phi_j)\sin(\theta_0)+\sum_{j=0}^{M-1}K(\theta_N,\phi_j)\sin(\theta_N)\right]\right\}$$

Since $\theta_0 = 0$ and $\theta_N = \pi$, $\sin(\theta_0) = \sin(\theta_N) = 0$, and the entire second term drops out, leaving:

$$I \cong \frac{\Delta\phi\Delta\theta}{4\pi}\sum_{i=1}^{N-1}\sum_{j=0}^{M-1}K(\theta_i,\phi_j)\sin(\theta_i)$$

Using Equation E.10, this becomes:

EQUATION E.11

$$I \cong \frac{\pi}{2NM} \sum_{i=1}^{N-1} \sum_{j=0}^{M-1} K(\theta_i, \phi_j) \sin(\theta_i)$$

It is important to note from Equation E.11 that the sample points (θ_i, ϕ_j) only need to be recorded for $i = 1$ through $N - 1$, and for $j = 0$ through $M - 1$. Thus, no data need be recorded at positions corresponding to Theta = 0 and 180 degrees, nor at positions corresponding to Phi = 360 degrees (Phi = 0 data are recorded), because those points are not used in Equation E.11. For transmit tests with $N = 12$ and $M = 24$, this means that only 11 Theta cuts and 24 Phi cuts, or 264 measurements in each polarization, need be taken. For receive tests with $N = 6$ and $M = 12$, only 5 Theta cuts and 12 Phi cuts, or 60 measurements in each polarization, need be taken.

Applying the discretization Equation E.11 to the TIS integral Equation E.5, we have:

EQUATION E.12

$$TIS = \frac{4\pi}{\oint \left[\frac{1}{EIS_\theta(\theta,\phi)} + \frac{1}{EIS_\phi(\theta,\phi)} \right] sin(\theta) d\phi d\theta} \cong \frac{1}{\frac{\pi}{2NM} \sum_{i=1}^{N-1} \sum_{j=0}^{M-1} \left[\frac{1}{EIS_\theta(\theta_i,\phi_j)} + \frac{1}{EIS_\phi(\theta_i,\phi_j)} \right] sin(\theta_i)}$$

or

$$TIS \cong \frac{2NM}{\pi \sum_{i=1}^{N-1} \sum_{j=0}^{M-1} \left[\frac{1}{EIS_\theta(\theta_i,\phi_j)} + \frac{1}{EIS_\phi(\theta_i,\phi_j)} \right] \sin(\theta_i)}$$

where N and M are of course chosen as those values appropriate for the receive testing, 6 and 12, respectively.

Applying the discretization Equation E.11 to the TRP integral Equation E.8, we have:

EQUATION E.13

$$TRP = \frac{1}{4\pi}\int_{\theta=0}^{\pi}\int_{\phi=0}^{2\pi}(EiRP_{\theta}(\theta,\phi)+EiRP_{\phi}(\theta,\phi))\sin(\theta)d\phi d\theta \cong \frac{\pi}{2NM}\sum_{i=1}^{N-1}\sum_{j=0}^{M-1}(EiRP_{\theta}(\theta_i,\phi_j)+EiRP_{\phi}(\theta_i,\phi_j))\sin(\theta_i)$$

or

$$TRP \cong \frac{\pi}{2NM}\sum_{i=1}^{N-1}\sum_{j=0}^{M-1}\left[EiRP_{\theta}(\theta_i,\phi_j)+EiRP_{\phi}(\theta_i,\phi_j)\right]\sin(\theta_i)$$

where N and M in this case are 12 and 24, respectively.

Equation E.12 and Equation E.13 are the TIS and TRP figures of merit, which are delineated in Appendix B.

E.4 Total Isotropic Sensitivity Estimator Based on RSS-Based Methods

For the purposes of TIS, the "threshold of sensitivity performance" would be that point at which the wireless device just passes the sensitivity test; that is, EIS for a given angle/polarization is the minimum RF power level where the radiated sensitivity test still passes.

Because each EIS measurement can be very time-consuming, a complete spherical TIS measurement performed by repeating the sensitivity test to determine every EIS point on the sphere would require extensive test time. Hence the ability to accurately estimate the EIS pattern, and thus the resultant TIS, in a reduced timeframe is critical to minimize the overall test time required to certify a product. The basic approach is to make a minimum number (generally only one) of direct EIS measurements, and then to substitute other less-time-consuming means of capturing the pattern shape information needed to determine the entire EIS pattern. Since this process relies on the repeatability of a single-point EIS measurement, rather than the integrated result of many single-point EIS measurements, some increase in uncertainty will be incurred.

The basic approach is to directly measure EIS at a single angle/polarization, and then to provide the pattern information through the use of receive signal strength (RSS) measurements reported by the EUT (for some technologies like GPS this may be C/N_0 or some other indicator of the received signal strength), which is a quick measurement that can be performed at all the other angles of the sphere.

To accomplish this in a radiated test chamber, incident field on the EUT is raised by some practical amount (typically 20 dB or so) above the point where the EUT is operating at its threshold of sensitivity on its pattern peak, and then fixed there for the remainder of the pattern measurement process. Ideally this level is near the top of the linear portion of whatever RSS report the EUT can produce, but must not be above the maximum RSS value the EUT can report. At each angle/polarization, the RSS reported by the EUT is recorded as the pattern value for that angle/polarization.

In addition to the RSS pattern information, an RSS linearization curve is required to "calibrate" the data reported by the EUT. This creates a transfer standard between the EUT and the calibrated signal generator (base station simulator, satellite simulator, etc.) used to generate the downlink signal. Because the TIS is primarily determined by peaks in the RSS pattern, which tend to cover more surface area than nulls, the linearization is critical within at least the first 10 dB below the pattern peak. While ideally the linearization should be evaluated across the entire range of RSS values recorded in the pattern, for pattern nulls more than 10 dB below the peak, extrapolation may be used to determine the remaining linearization correction. Normally, the linearization should be determined in an over-the-air configuration for one polarization at the peak of the pattern, but conducted linearization curves may be used in certain circumstances provided additional uncertainty terms are applied to the result.

The linearization curve can be treated as a function of the output power of the signal generator such that the measured RSS is given by:

$$RSS_i = RSS(P_{SGi})$$

Assuming that the RSS data is monotonic, an inverse function can be defined such that:

$$RSS_i = RSS(RSS^*(RSS_i))$$

so that:

$$P_{SGi} = RSS^*(RSS_i)$$

The conversion from RSS to power may use linear interpolation or curve fitting as necessary to fill in between measured and reported RSS and power steps. The assumption for currently defined RSS based metrics is that linear interpolation is done in dB, not linear power units, although this could be different for other technologies. Note that in cases where interpolation between points may not be the best solution, best fit lines or curves could produce an RSS* relationship that does not lie directly on the measured linearization data.

Once all of the measured RSS values in the pattern have been linearized, the pattern should be normalized by dividing each pattern value by the peak value in linear power units (equivalent to subtracting the peak from the pattern in dB). The entire process can be represented by the following equation:

$$P(\theta,\phi,Polarization) = RSS^*(RSS(\theta,\phi,Polarization))/RSS^*(RSS_{Peak}) \ ,$$

where RSS_{Peak} is the maximum RSS determined in the pattern (for GPS this may be the maximum RSS determined in the upper hemisphere of the pattern). The result is a relative pattern with a peak value of 1.0 (0 dB) for any polarization.

A full EIS measurement is performed at the same peak position and polarization to determine a reference for the resultant estimated EIS pattern, which is then given by:

$$EIS(\theta,\phi,Polarization) = EIS_{ref} / P(\theta,\phi,Polarization)$$

where all terms are in linear power units. Alternately the EIS pattern can be determined by subtracting the relative pattern from the reference EIS value in dB. From this point, the previously defined integrals can be used to determine TIS and the various partial surface integrals required for a given technology.

This linearization and normalization method can be repeated to reduce the resultant measurement uncertainty by normalizing to multiple EIS reference values around the surface of the sphere and then averaging the resulting patterns. Through this process, the uncertainty associated with using a single EIS reference can be reduced by a factor of $1/\sqrt{N}$ where N is the number of EIS points used to determine the average EIS pattern.

Appendix F Symmetry Pattern Antenna (Informative)

The pattern symmetry requirement specified in Section 3 should not be misinterpreted as an absolute accuracy requirement. A requirement of ±0.1 dB for antenna pattern measurements taken in the cellular and PCS bands would be very challenging to accomplish. To clarify pattern symmetry, and provide context for selecting its value, the following is provided for informational purposes only.

F.1 Symmetry Pattern vs. Absolute Accuracy

The expanded uncertainty budget required by this test plan is cited in Section 7.5. Given this specification, consideration must be given to the many items in the complete uncertainty budget that contribute to this final total. Examples of these are the uncertainty of the instrument used to measure absolute power (e.g., spectrum analyzer or power meter), the uncertainty with which the gain of the Calibrated Reference Antenna was measured, quiet zone accuracy (i.e., ripple or reflection in the chamber), etc. Many of these uncertainty contributions can be made quite small at these frequency ranges. Three-dimensional pattern integration of the Calibrated Reference Antenna can yield very precise directivity references. In the case of measuring highly non-directive devices, the two largest single contributors to the uncertainty budget are usually the ultimate accuracy of the power measurement instrument, and the quiet zone accuracy (ripple) in the anechoic chamber.

To obtain the overall uncertainty desired, it is likely that a quiet zone ripple substantially better than ±1.0 dB is required. To quantify the quiet zone accuracy, an antenna (i.e., the omni-directional dipole or loop source) substantially better than the ±1.0 dB ripple level discerned, therefore, should be used. Thus, the omni-directional test antennas used for the chamber evaluation given in Section 3 (not necessarily for the Range Reference Measurement) are required to have patterns that are symmetric to ±0.1 dB. This level of pattern symmetry is achieved rather easily with an electric dipole rotated about its axis, and can be achieved with some care with the uniform-current (Alford) loops described in this section. (Reference can also be made to, e.g., *Loop Antennas with Uniform Current*, Proc. IRE, vol. 32, pp. 603-607, October, 1944.)

Pattern symmetry is measured with an antenna centered precisely on the azimuth axis of rotation of the positioner. An anechoic chamber with a very low reflectivity is not required to verify a nominally omni-directional antenna's pattern symmetry. If an antenna with a perfectly symmetric omni pattern is precisely on the center of rotation, even if there is a substantial reflector in the chamber, a perfectly uniform pattern can be observed. This is because the signals on both the direct and reflected paths remain constant as the antenna is rotated. So, as long as an “omni” antenna starts out more or less omni, it can be qualified for pattern symmetry in a chamber that might not meet even the ±1.0 dB quiet zone ripple referred to above.

It is important to note this specification calls for pattern SYMMETRY of ±0.1 dB -- NOT absolute gain accuracy. In fact, for the chamber evaluation detailed in Section 3 (not the Range Reference Measurement) phase, gain is not needed at all—only verification of the pattern symmetry. Furthermore, the ±0.1 dB symmetry requirement is not arbitrary; it follows directly from the desire to meet the expanded uncertainty budgets cited in Section 7.5.

To summarize, this specification does not require chamber evaluation antennas with a gain accuracy of ±0.1 dB. Rather, the antenna pattern symmetry should be ±0.1 dB, which is achievable and quantifiable.

Appendix G Instructions for Calculating Standard Uncertainty Values (Normative)

G.1 Mismatch

This uncertainty contribution addresses variation in the test system VSWR that introduces measurement uncertainty. For modern automated test systems used for OTA testing, it is expected that there will be considerable impedance mismatch between the various RF cables and components used within the system. Standing waves result in cables between points of mismatch that can cause variations in the signal levels measured. At the frequencies of interest, longer cables tend to be self-attenuating, resulting in a reduction in the standing wave contribution. In other cases, attenuators may be added at connection ports to reduce standing wave effects. The assumption made here is that any standing wave contributions in the cable only serve to modify the resultant signal level, but do not introduce sufficient time delay to corrupt the digital communication being measured. In this case, the error in a measurement due to mismatches throughout the system is caused by the difference in the VSWR between the calibration step (where the path loss of cables and other components of the measurement system is determined) and the measurement step (where those cables and components are used in a power or sensitivity measurement). If only the magnitude of the mismatch at a given connection were to change, then the measurement uncertainty for that change could be estimated using the difference in VSWR magnitudes before and after the change. However, more often, the change in the system also entails a change in cable lengths between two mismatches. That change in cable length results in a change in the frequency dependence of the mismatch, which makes it impractical to try to consider the difference between VSWR values to determine the uncertainty. Instead, the VSWR uncertainty due to each mismatch where a cable connection is changed must be applied to determine the appropriate measurement uncertainty contributions.

The maximum error due to VSWR between two ports is given in general form by the following equation:

EQUATION G.1

$$\varepsilon_{VSWR} = 20\log\left(1 + |\Gamma_1| \times |\Gamma_2| \times |S_{21}| \times |S_{12}|\right)$$

where Γ_1 and Γ_2 are the complex reflection coefficients of the two ports in question and S_{21} and S_{12} are the forward and reverse transmission coefficients between the two ports. From this it is evident that reducing the reflection coefficients (by reducing mismatches) or reducing the transmission coefficients (by adding attenuation) will reduce the resulting error contribution. The reflection coefficient can be expressed in terms of the VSWR at a given connector by Equation G.2:

EQUATION G.2

$$|\Gamma| = \frac{VSWR - 1}{VSWR + 1}$$

From this equation, a simpler two-port formulation can be derived to represent the VSWR error contribution due to the reflectivity of each side of a cable connection point. This allows estimating the required uncertainty contribution by simply measuring the reflection coefficients of each side of a cable connection that is changed between the calibration and measurement steps.

EQUATION G.3

$$\begin{aligned} \varepsilon_{VSWR} &= 20\log\left(1 + |\Gamma_1| \times \left(|\Gamma_2| \times |S_{21}| \times |S_{12}|\right)\right) \\ &= 20\log\left(1 + |\Gamma_{source}| \times |\Gamma_{load}|\right) \end{aligned}$$

where Γ_{source} and Γ_{load} are the complex reflection coefficients of the cable/connector ends looking towards the source or load respectively.

Note: *If there are several connections in a test set-up, they will all interact and contribute to the combined mismatch uncertainty. The method that shall be used for calculating the combined mismatch uncertainty for these cases is fully explained in annex D of TR 102 273.*

For a typical OTA system, there are four principal cable junctions to evaluate: 1) the loopback cable connection made to calibrate out cable losses and test equipment factors during the range calibration; 2) the connection between the "transmit" cable and the reference antenna placed within the quiet zone; 3) the connection between the measurement port cable of the test system (the cable normally connected to the test equipment to route signals to or from the measurement antenna) and the loopback cable; and 4) the connection of the measurement port cable to the test equipment. The impact of the first three contributions can be minimized through the use of appropriate attenuators at the end of the transmit and loopback cables. The fourth term can be reduced through the addition of an attenuator that remains in the measurement system on the end of the cable leading to the measurement instrument.

An additional term has traditionally been evaluated related to the potential of the EUT to alter the VSWR of the measurement antenna. Generally, any change in VSWR sufficient to produce a notable uncertainty contribution would likely be due to the EUT being within the reactive region of the measurement antenna, or otherwise large enough to violate other range length requirements. However, the variability of the measurement antenna VSWR in the presence of different EUTs should be evaluated to confirm that this contribution is negligible, and in the event that any variation is detected, an appropriate measurement uncertainty term shall be included.

Since the error due to VSWR has a sinusoidal nature, it causes a deviation that clusters equally above and below the initial transmitted signal. This U-shaped distribution must be converted

to an equivalent normal distribution probability by using the following equation to determine the standard uncertainty.

EQUATION G.4

$$u_i = \frac{a_i}{\sqrt{2}} = \frac{\varepsilon_{VSWR}}{\sqrt{2}}$$

G.2 Cable Factor

This uncertainty applies to the Measurement Antenna only.

For cases in which the Measurement Antenna is directional (i.e. peak gain greater than +5 dBi e.g. horn, LPDA, etc.), the standard uncertainty should be taken as 0.00 dB. For all other cases of Measurement Antenna gain (i.e. dipole, sleeve dipole, loop, etc.), the following rules apply:

- If nothing has been changed in the time interval between the Range Reference Measurement and the EUT measurement, the interaction of the cable (whether it is 'dressed' in ferrites and/or a balun) will be the same in both parts of the test, so a fixed value of 0.00 dB shall be taken for the expanded uncertainty contribution.
- If the cable has been changed or moved to a different routing, but the dressing with ferrites and/or a balun remains the same (or similar), then a fixed value of 0.50 dB shall be taken and its distribution shall be assumed to be rectangular (i.e. standard uncertainty = 0.29 dB).
- If the dressing has been changed and ferrites and/or balun have only been present in one of the parts of the test, then 0.00 dB shall be entered in the measurement part of the test, and 4.00 dB in the Range Reference Measurement (justification for these values can be found in Annex A, section A.5 and Annex E in TR 102 273).

G.3 Insertion Loss

Where the same cable on the input to the Measurement Antenna has been used in both parts of the test, then a fixed value of 0.00 dB shall be entered into the tables for both parts of the test.

Where any cable is used in only one part of the test (e.g. the Range Reference Measurement) and its insertion loss is used in the calculations, then either the overall combined standard uncertainty of the insertion loss measurement shall be used in the relevant table or the manufacturer's data sheet shall be consulted. In the latter case, this uncertainty will usually be quoted as ±x dB. Unless something specific is stated about the distribution of this uncertainty,

it should be assumed to be rectangularly distributed, in which case the standard uncertainty shall be calculated as: $\frac{\text{maximum value}}{\sqrt{3}}$.

G.4 Receiving Device (Spectrum Analyzer, Measurement Receiver or Base Station Simulator)

The receiving device is used to measure the received signal level in TRP tests either as an absolute level or as a reference level. It can generally contribute uncertainty components in two ways: absolute level accuracy and non-linearity. Both components are present in the EUT part of the test, but only the non-linearity uncertainty is present in the Range Reference Measurement, with the exception of cases where one of the optional transfer standard methods is used to apply the absolute accuracy of one instrument as a correction to that of another.

For relative measurements, if the same receiver is used to measure both test configurations, then the receiving device is used to measure the relative received signal levels. The receiving device can generally contribute uncertainty components in terms of non-linearity for this measurement. If two different instruments are used (including, possibly, two different options in the same base station simulator) then the absolute uncertainties of both devices will contribute. So the absolute uncertainty for the second receiver would be included as an additional uncertainty.

These uncertainty contributions shall be taken from the manufacturer's data sheet and converted to dB if necessary. The worst case data sheet values shall be used.

Note that the measurement uncertainty specification of the instrument may vary as a function of the chosen bandwidth setting or other parameters. The lab shall ensure that appropriate manufacturer's uncertainty contributions are specified for the settings used.

G.5 Signal Generator or Base Station Simulator

In a similar manner to the receiving device, the signal generator or base station simulator can contribute in two ways (absolute level and stability) to the uncertainty in, respectively, the Range Reference Measurement and the TIS measurement. In the case of a network analyzer used for the Range Reference Measurement, the signal generator is combined with the receiver in one unit that measures the relative difference between the output signal and received signal. Thus, the uncertainty contribution of the signal generator is included in one overall uncertainty contribution of the instrument, and does not need to be entered separately.

For relative measurements, if the same base station simulator is used to measure both test configurations, then it is used to measure the relative radiated sensitivity. In this case, the base station simulator will generally contribute uncertainty components in terms of non-linearity

for the relative measurement. If two different instruments are used (including, possibly, two different options in the same base station simulator) then the absolute uncertainties of both devices will contribute. In that case the absolute uncertainty of the base station simulator for test configuration B would be included as an additional uncertainty.

These uncertainty contributions shall be taken from the manufacturer's data sheet and converted to dB if necessary.

1. If using the manufacturer's data sheet, the worst case values shall be used.
2. An allowed alternative is to use an alternate measurement device to normalize the signal generator RF output level.
3. An allowed alternative is to use the calibration report plus the MU and aging terms from the calibration lab.

For certain test configurations, the confidence level for BER/FER for measuring the sensitivity may be limited in order to keep the test time low. The measured sensitivity with lower confidence levels will have some small variation. For the full TIS measurements, the variation for each sensitivity reading will largely average out over the large number of sample points over the 3D sphere. However, for a single point measurement, this small variation in sensitivity shall be included as an uncertainty. One way to mitigate this uncertainty is to use a much higher confidence level (i.e. longer test time) to significantly reduce this uncertainty. For the multi-point measurement, the small variation in radiated sensitivity is averaged over multiple points and its uncertainty is reduced by the averaging process. Test measurements can be conducted to characterize the uncertainty associated with whichever test method (such as using a higher confidence level) is selected for the single/multi point radiated measurement.

G.6 Gain of the Calibrated Reference Antenna

For cases in which the Calibrated Reference Antenna is directional (i.e., peak gain greater than +5 dBi e.g. horn, LPDA, etc.), the standard uncertainty for the gain shall be taken as the reported value from its measurement.

For all other cases of Measurement Antenna gain (i.e., dipole, sleeve dipole, loop, etc.), the following rules apply:

- Where the gain of the Calibrated Reference Antenna has been measured in a different test chamber using the same mounting arrangements/jigs, the value of the standard uncertainty shall be taken as the reported value from that measurement.
- Where the gain of the Calibrated Reference Antenna has been measured in a different test chamber using different mounting arrangements/jigs, the value of the standard uncertainty shall be taken as the reported value from that measurement, combined by the RSS method with a contribution from the mounting arrangement/jig. A fixed value of 0.5 dB shall be taken and its

distribution shall be assumed to be rectangular (i.e. standard uncertainty = 0.29 dB).

- Where the gain of the Calibrated Reference Antenna has been measured in the same test chamber (possibly by the 3-antenna method) using the same mounting arrangements/jigs, the value of the standard uncertainty shall be taken as that calculated for the measurement.

G.7 Measurement Distance

G.7.1 Offset of the Phase Center of the EUT from Axis(es) of Rotation

All head phantom measurements defined in this test plan require θ and ϕ rotation of the EUT and head phantom combination about the Ear Reference Point (assumed to be the location of the phase center) as the coordinate origin. As this may be practically impossible for a number of reasons (e.g. the turntable may be too small to allow adequate offset, etc.), an alternative of rotating about the center of the SAM head phantom is allowed. The center of the SAM head phantom is defined as the new origin of the coordinate system if the axes are translated 82 mm in the -Y direction from the original origin shown in Figure A-3. The new alignment is shown in Figure A-6. For this new alignment, an additional uncertainty contribution must be included in the calculation of measurement uncertainty for the EUT measurement because the phase center will rotate on a non-zero radius about the center of rotation, thereby giving a variable measurement distance.

The maximum level change due to this alternative positioning of the SAM head is:

$$20 \log_{10}\left(\frac{d}{d-0.082}\right) \text{dB}$$

where d = range length i.e. the distance between the phase center of the measurement antenna and the axis of rotation of the turntable (ϕ-axis for distributed axis positioner systems, θ-axis for multi-axis positioner systems).

Note: *"d" is in meters.*

Since this level change uncertainty is assumed to be rectangularly distributed, the standard uncertainty shall be derived by dividing the maximum level by $\sqrt{3}$.

G.7.2 Offset of the Phase Center of the Calibrated Reference Antenna from Axis(es) of Rotation

For the Range Reference Measurement (i.e, where the Calibrated Reference Antenna is involved), any uncertainty in the accuracy of positioning its phase center on the axis(es) of rotation will directly generate an uncertainty in this part of the measurement. For sleeve dipoles and loops, provided that care is taken in their positioning the uncertainty should be 0.00 dB since their phase centers are easily identifiable. However, for ridged horn antennas and LPDAs (for both of which the position of the phase center varies with frequency), the phase center could be at any point within the tapered sections, giving:

For a ridged horn: A maximum positional uncertainty, ±*d*, where *d* equals 0.5 times the length of taper

For an LPDA: A maximum positional uncertainty, ±*d*, where *d* equals 0.5 times the length of the boom

The level uncertainty resulting from these positional uncertainties shall be calculated as:

$$\pm 20\log_{10}\left(\frac{measurement\ distance - d}{measurement\ distance}\right)$$

Since this level uncertainty is assumed to be rectangularly distributed, the standard uncertainty shall be derived by dividing by $\sqrt{3}$.

G.7.3 Blocking Effect of the EUT on the Measurement Antenna (if too close)

This uncertainty arises because the EUT can 'block' the power radiated by the Measurement Antenna, reflecting the energy back into the antenna which, as a result, can change its input impedance/VSWR whilst also creating a standing wave within the chamber between the Measurement Antenna and EUT. The magnitudes of the resulting uncertainties are dependent on both the directionality of the Measurement Antenna and the measurement distance. The uncertainties increase with increasing directionality (i.e., increasing gain) of the Measurement Antenna and with decreasing measurement distance. The magnitudes of the effects will vary as the EUT and/or Measurement Antenna is rotated (since the 'blocking' area changes with angle), and therefore allowances for the uncertainties introduced shall be made.

Note: *These uncertainties only apply for tests of the EUT against the head phantom or for notebooks and other large form factor devices. The contributions can be expected to be worst for large flat reflecting objects such as a notebook display or large metallic housings. These terms may also apply to the range calibration in the event that the reference antenna has a large radar cross section. Note too that significant changes in VSWR at range lengths on the*

order of a few wavelengths from the DUT may be indicative of the DUT encroaching on the reactive region of the measurement antenna, thus invalidating measurement results.

G.7.3.1 VSWR

This measurement uncertainty is due to a second order standing wave between the DUT and any mismatch in the system cabling as seen from the measurement antenna. As described in Appendix G.1, measurement uncertainty arises when the VSWR changes between the range calibration and DUT measurement steps.

To estimate the magnitude of this uncertainty, Equation G.5 is used to evaluate the potential standing wave contribution from reflections within the test volume to the first notable mismatch past the measurement antenna.

EQUATION G.5

$$\varepsilon_{VSWR} = 20\log\left(1+\left|\Gamma_{DUT}\right|\times\frac{G_{MA}\lambda}{8\pi R}\times\left(\left|\Gamma_2\right|\times\left|S_{21}\right|\times\left|S_{12}\right|\right)\right)$$
$$= 20\log\left(1+\left|\Gamma_{DUT}\right|\times\frac{G_{MA}\lambda}{8\pi R}\times\left|\Gamma_{load}\right|\right)$$

Where $G_{MA}\lambda/8\pi R$ is a modified version of the Friis transmission equation representing the measurement antenna (MA) with linear power gain G_{MA} both transmitting and receiving the signal reflected from the DUT at a distance R from the MA, for a total distance of $2R$. Since the gain of the measurement antenna includes the effect of mismatch on the antenna, there is no need to further evaluate the VSWR of the measurement antenna itself. The S-Parameters in Γ_{load} correspond to the path loss of any cables and attenuators between the measurement antenna and the first significant mismatch Γ_2. As described in Appendix G.1, this can be replaced by a single measurement of the mismatch at the end of the cable attached to the measurement antenna. To determine the worst-case possible error contribution due to this term, Γ_{DUT} may be set to 1 to represent a perfectly reflecting metal plane normal to the measurement antenna boresight. The maximum error due to this term is then converted to a standard uncertainty contribution as described in Appendix G.1.

Example:

Range length: 1.2 m

Measurement antenna gain: 9 dB

Test frequency: 700 MHz

Cable loss: 3 dB

Mismatch at test equipment rack: 2:1

EQUATION G.6

$$\varepsilon_{VSWR} = 20\log\left(1+\frac{10^{9/10}\times\frac{c}{7\times10^{8}}}{8\pi\times1.2}\times\left(\frac{2-1}{2+1}\times10^{-3/20}\times10^{-3/20}\right)\right)$$
$$= 20\log\left(1+\frac{7.94\times0.428}{8\pi\times1.2}\times\left(\frac{1}{3}\times0.707^{2}\right)\right)$$
$$= 0.16\ \text{dB}$$

Note: *Any significant change in the VSWR of the measurement antenna would imply a reactive region interaction, implying that the measurement antenna is too close to the DUT and thus the test system should not be used in this case.*

G.7.3.2 Chamber Standing Wave

In addition to the second order VSWR term described above, there is the potential for a standing wave reflection between the measurement antenna and the DUT, representing an additional chamber ripple term beyond that recorded in the ripple test. While this contribution may tend to average out over the surface of an irregular object, that cannot be guaranteed. This term is also a function of the reflectivity of the measurement antenna, which may be difficult to determine empirically. If a measured or manufacturer specified reflectivity is unavailable, then for the purpose of this contribution, the reflectivity of the measurement antenna shall be assumed to be the gain of the measurement antenna multiplied by the reflectivity corresponding to the VSWR of the MA. Thus, Equation G.6 above becomes:

EQUATION G.7

$$\varepsilon_{VSWR} = 20\log\left(1+\left|\Gamma_{DUT}\right|\times\frac{G_{MA}\lambda}{8\pi R}\times\left|\Gamma_{MA_VSWR}\right|\right)$$

Given the same example parameters above, and a measurement antenna VSWR of 2.5:1, this contribution then becomes:

EQUATION G.8

$$\varepsilon_{VSWR} = 20\log\left(1+\frac{10^{9/10}\times\frac{c}{7\times10^{8}}}{8\pi\times1.2}\times\frac{2.5-1}{2.5+1}\right)$$
$$= 20\log\left(1+\frac{7.94\times0.428}{8\pi\times1.2}\times.429\right)$$
$$= 0.41\,\text{dB}$$

If a free-space reflectivity of the measurement antenna is available, Equation G.8 simplifies to:

EQUATION G.9

$$\varepsilon_{VSWR} = 20\log\left(1+\left|\Gamma_{DUT}\right|\times\frac{\lambda}{8\pi R}\times\left|\Gamma_{MA}\right|\right)$$

G.7.4 Additional Measurement Uncertainties for Inadequate Measurement Distance

The minimum measurement distances given in Table 3-1 are based on industry accepted "rules of thumb" for single point measurements. The assumption in the test plan is that meeting these minimum measurement distances will result in negligible measurement uncertainty due to measurement distance. Additional measurement uncertainty contributions are required for measurement distances that are less than the distances given in Table 3-1. These additional measurement uncertainty contributions are shown in Table G-1.

TABLE G-1 CONTRIBUTIONS FOR INADEQUATE MEASUREMENT DISTANCE

Band	Lower Frequency (MHz)	Upper Frequency (MHz)	Required Measurement Distance (m)	MU Contributions for Inadequate Range Length				
				R = 1.2m	R ≥ 1.29m	R ≥ 1.43m	R ≥ 1.5m	R ≥ 1.60m
3GPP Band 13	746	787	1.21	0	0	0	0	0
3GPP Band 17	704	746	1.28	0.2	0	0	0	0
3GPP Band 12	699	746	1.29	0.2	0	0	0	0
AWS-1 RX (3GPP Band 4 RX)	2110	2155	1.29	0.2	0	0	0	0
3GPP Band 41	2496	2690	1.61	0.2	0.1	0.1	0.1	0

The MU contributions in Table G-1 were determined by making a TRP measurement on a passive antenna at different range lengths. The same data sets were then transformed to far-

field data using a spherical near-field-to-far-field transform. The output of the transform is the data with all of the effects of range length removed. The TRP was then re-calculated using the far-field data. The difference between the TRP calculated using the finite measurement distances and the infinite measurement distances was then used to establish the measurement uncertainty contributions in Table G-1. The details of these measurements can be found in [23].

Note that the uncertainty contributions in Table G-1 should be included in the measurement uncertainty calculations for the simulated use case. They should not be included in the measurement uncertainty calculations for the free space use case or the reference measurement.

G.8 Signal Level Ripple Within Quiet Zone

The signal level ripple is measured during the chamber proving procedures detailed in Section 3, using omni-directional probe antennas (sleeve dipoles and loops). The ripple test provides a very thorough measurement of the interaction of the chamber and positioning equipment with different signal paths throughout the quiet zone. The ripple test result represents a worst-case deviation in EIRP or EIS for a theoretical isotropic radiator/receiver or an omni-directional radiator/receiver with the same orientation as the ripple test. Suitable values for the measurement uncertainties associated with different measurement quantities can be determined as follows.

G.8.1 Effect of Ripple on TRP and TIS Integration

In TRP and TIS tests, the test metric (quantity used for comparison between EUTs) is the result of a spherical surface integral of the EIRP or EIS. In order to estimate the effect of a single EIRP/EIS point on the total integrated value, it is necessary to define a statistical uncertainty value referred to as the surface standard deviation (SSD). The SSD uses the ripple test results to determine a Type A uncertainty value for a theoretical isotropic radiator placed anywhere within the quiet zone. Empirical results of both measured and calculated omni-directional and directional antennas indicate that the uncertainty predicted by the SSD of the ripple encompasses the variation in the TRP/TIS integral value for the expected range of EUT patterns.

The standard deviation from a sample of N readings is given by:

EQUATION G.10

$$s(q_k) = \sqrt{\frac{1}{(N-1)}\sum_{k=0}^{N-1}(q_k - \bar{q})^2}$$

In terms of relative deviations in linear power, this becomes:

EQUATION G.11

$$s(p_k) = \sqrt{\frac{1}{(N-1)}\sum_{k=0}^{N-1}\left(\frac{p_k}{\overline{p}} - 1\right)^2}$$

where p_k is an individual ripple measurement point, converted to linear units ($p_k = 10^{p_k(dB)/10}$), and $\overline{p}$ is the average of the associated ripple measurement, again in linear units. This is the average of the associated ripple measurement, again in linear units. This formulation provides the SSD for the Phi-axis ripple test, since the contribution of the EIRP/EIS to the surface integral is the same at each Phi angle.

For the Theta axis ripple, the contribution of each EIRP/EIS point to the surface integral is dependent on the Theta angle, and therefore, so does any error contribution due to that point. The spherically weighted contribution becomes:

EQUATION G.12

$$s(p_k) = \sqrt{\frac{1}{(N-1)}\sum_{k=0}^{N-1}\left[\left(\left(\frac{p_k}{\overline{p}} - 1\right)\sin(\theta_k)\right)^2\right]}$$

Note: *This simplifies to the previous equation when* $\theta = 90$.

The standard uncertainty contribution due to the ripple test is then given by the maximum of all the $s(p_k)$ values for all orientations, offsets, and polarizations of the ripple test:

EQUATION G.13

$$u(x) = 10\log(1 + \max(s_j(p_k)))$$

Equation G.13 represents the value to be placed in Table 7-2 for $N > 50$. For $N \leq 50$, an appropriate coverage factor should be applied.

G.8.1.1 Applying the Surface Standard Deviation

Repeat the following steps for each required band and positioning system configuration (free-space vs. SAM head phantom, etc.) to generate the uncertainty for that configuration.

For each ripple test measurement:

- Compute the linear average of the ripple value.
- Calculate the spherically weighted surface standard deviation using Equation G.12. Use $\theta = 90$ for Phi-axis ripple test results.

- Select the maximum SSD from all 13 ripple test positions and calculate the standard uncertainty in dB using Equation G.13. This value shall be used directly in the uncertainty budget in Table 7-2.

G.8.1.2 Analysis of Uncertainty vs. Error Contribution

In order to provide some confidence in the uncertainty values produced by this method, it is useful to compare the actual error contribution to a TRP/TIS integral to the uncertainty predicted by a ripple test. This can only be performed rigorously by assuming an isotropic radiation pattern for the EUT, but, as mentioned above, the result is deemed reliable for other non-isotropic EUTs of interest to this test plan. It is easy enough to test specific cases and show that the SSD expanded uncertainty encompasses the TRP/TIS error for likely real pattern shapes. This formulation will refer solely to TRP, but the same procedure can be followed for TIS. Starting with Equation B.1:

EQUATION G.14

$$TRP \cong \frac{\pi}{2NM}\sum_{i=1}^{N-1}\sum_{j=0}^{M-1}\left[EiRP_{\theta}(\theta_i,\phi_j)+EiRP_{\phi}(\theta_i,\phi_j)\right]\sin(\theta_i)$$

In terms of total EIRP and an associated error term at each point, this becomes:

EQUATION G.15

$$TRP+Error_{TRP} \cong \frac{\pi}{2NM}\sum_{i=1}^{N-1}\sum_{j=0}^{M-1}\left[EiRP_{Total}(\theta_i,\phi_j)+Error(\theta_i,\phi_j)\right]\sin(\theta_i)$$

which can be represented as a relative TRP error as:

EQUATION G.16

$$1+\frac{Error_{TRP}}{TRP} \cong \frac{\frac{\pi}{2NM}\sum_{i=1}^{N-1}\sum_{j=0}^{M-1}\left[EiRP_{Total}(\theta_i,\phi_j)+Error(\theta_i,\phi_j)\right]\sin(\theta_i)}{\frac{\pi}{2NM}\sum_{i=1}^{N-1}\sum_{j=0}^{M-1}EiRP_{Total}(\theta_i,\phi_j)\sin(\theta_i)}$$

which simplifies to:

EQUATION G.17

$$\frac{Error_{TRP}}{TRP} \cong \frac{\sum_{i=1}^{N-1}\sum_{j=0}^{M-1}Error(\theta_i,\phi_j)\sin(\theta_i)}{\sum_{i=1}^{N-1}\sum_{j=0}^{M-1}EiRP_{Total}(\theta_i,\phi_j)\sin(\theta_i)}$$

In a ripple test, the variation occurs along only one axis of rotation, so it's possible to simplify this equation further. Although either axis could be held constant, the following formulation will assume that the ripple is along the Theta axis. The Phi-axis result is similar. Substituting in the Theta ripple test geometry results in the following equation:

EQUATION G.18

$$\frac{Error_{TRP}}{TRP} \cong \frac{\sum_{i=1}^{N-1} Error(\theta_i)\sin(\theta_i)}{\sum_{i=1}^{N-1} EiRP_{Total}(\theta_i)\sin(\theta_i)}$$

Assuming $N > 50$, the expanded uncertainty for a 95% confidence level ($k = 2$) is just:

EQUATION G.19

$$U = 2\,u(x)$$

The linear representation of the expanded uncertainty is given by:

EQUATION G.20

$$U_{lin} = (1 + s_{\max}(p_k))^2 = \left(1 + \sqrt{\frac{1}{(N-1)}\sum_{k=0}^{N-1}\left[\left(\left(\frac{p_k}{\overline{p}} - 1\right)\sin(\theta_k)\right)^2\right]}\right)^2$$

Assume that the relative ripple from the ripple test, $(p_k / \overline{p} - 1)$, is equivalent to the relative error at a given EIRP point, $Error(\theta_i, \phi_j) / EiRP_{Total}(\theta_i, \phi_j)$, so that the Theta axis ripple gives:

EQUATION G.21

$$U_{lin} = \left(1 + \sqrt{\frac{1}{(N-1)}\sum_{i=0}^{N-1}\left[\left(\frac{Error(\theta_i)}{EiRP_{Total}(\theta_i)}\sin(\theta_i)\right)^2\right]}\right)^2$$

We can normalize the $Error / EiRP_{Total}$ ratio such that $EiRP_{Total}$ is one everywhere (equivalent to an isotropic radiator) and define a new error term, as the relative error at each EIRP point. The expanded uncertainty then simplifies to:

EQUATION G.22

$$U_{lin} = \left(1 + \sqrt{\frac{1}{(N-1)}\sum_{i=0}^{N-1}\left[\left(Error'(\theta_i)\sin(\theta_i)\right)^2\right]}\right)^2$$

In the limiting case of $Error'(\theta_i) = 0$, this reduces to $U_{lin} = 1$ so that U = 0 dB. For an isotropic radiator, the TRP error equation becomes:

EQUATION G.23

$$Error'_{TRP} \cong \frac{\sum_{i=1}^{N-1} Error'(\theta_i)\sin(\theta_i)}{\sum_{i=1}^{N-1}\sin(\theta_i)} = \frac{\sum_{i=1}^{N-1} Error'(\theta_i)\sin(\theta_i)}{2(N-1)/\pi}$$

In the limiting case of $Error'(\theta_i) = 0$, this reduces to $Error'_{TRP} = 0$. The corresponding linear value for comparison to the uncertainty is given by $1 + Error'_{TRP}$. When $Error'_{TRP} = 0$, this results in a 0 dB error. It should be noted that the relative error can never be less than -1 since that would imply that $TRP + Error_{TRP} < 0$, which is impossible. Comparing these two formulations gives:

EQUATION G.24

$$\left(1 + \sqrt{\frac{1}{(N-1)}\sum_{i=0}^{N-1}\left[\left(Error'(\theta_i)\sin(\theta_i)\right)^2\right]}\right)^2 \quad \text{and} \quad 1 + \frac{\sum_{i=1}^{N-1} Error'(\theta_i)\sin(\theta_i)}{2(N-1)/\pi}$$

Note the similarities between the two equations.

G.8.2 Effect of Ripple on Range Reference Measurement

In addition to the integration of TRP and TIS values, the Range Reference Measurement can potentially suffer the effects of the signal ripple. Since the range reference measurement may be performed with various support structure components removed, the impact on the measurement uncertainty is based only on the ripple of components remaining in the test volume during the calibration process. The value of the uncertainty component arising from ripple depends on the directivity of the reference antenna, with higher gain antennas typically seeing lower chamber induced ripple, but more uncertainty related to the reference gain and phase center position of the reference antenna.

- Where the Calibrated Reference Antenna is a sleeve dipole or magnetic loop placed in the center of the test volume, the standard uncertainty shall be calculated by dividing the maximum ripple of the chamber as configured for the range calibration by $\sqrt{3}$ since the uncertainty is considered to be rectangularly distributed. In cases where advanced calibration methods are used to minimize this contribution (e.g. ripple or efficiency based calibrations as described in Section 4, this contribution may be further divided by $\sqrt{N}$, where N is the number of data points used in the averaging measurement.
- Where the Calibrated Reference Antenna is a ridged horn, the positional uncertainty (assuming the phase center is unknown) shall be considered equal to 0.5 times the length of the flared section. The resulting signal level ripple shall be taken as:

$$\sin\left(\left(\frac{0.5\times length\ of\ \ flared\ \ section\ in\ mm}{150}\right)\times 0.90\right)\times max\ ripple$$

  and the standard uncertainty calculated by dividing by $\sqrt{3}$ since the uncertainty is considered to be rectangularly distributed.
- Where the Calibrated Reference Antenna is a LPDA, the positional uncertainty (assuming the phase center is unknown) shall be considered equal to ±0.5 times the length. The resulting signal level ripple shall be taken as:

$$\sin\left(\left(\frac{0.5\times length\ in\ mm}{150}\right)\times 0.90\right)\times max\ ripple$$

  and the standard uncertainty calculated by dividing by $\sqrt{3}$ since the uncertainty is considered to be rectangularly distributed.

G.9 Influence Quantities

Temperature is the only influence quantity in the tests covered by this test plan. It influences test equipment used for TRP and TIS. This measurement uncertainty must be included when the test equipment is used outside of the certified temperature range.

TRP test

The ambient temperature uncertainty ±v in Kelvin is converted to a level uncertainty by means of formula 5.2 in ETSI TR 100 028 Part 1. The test laboratory making the measurements may, by means of additional measurements, estimate its own influence quantity dependencies, but if this is not carried out the values stated in table F.1 in ETSI TR 100 028 Part 2 should be used as worst-case values.

The standard uncertainty shall be calculated as:

$$u_{j\,temperatureuncertainty} = \frac{\sqrt{\left(\frac{(v_{temp})^2}{3}\right) \times \left((\mu_{power_avg})^2 + (\mu_{power_std})^2\right)}}{23} dB$$

where

μ_{power_avg} is mean value of power measurement sensitivity in percentage per Kelvin (%/K). A worst-case value is 4 %/K for k=2 (see ETSI TR 100 028 Part 2).

μ_{power_std} is standard deviation of power dependence per Kelvin. A worst-case value is 1.2 %/K for k=2 (see ETSI TR 100 028 Part 2).

Example of a typical measurement uncertainty calculation:

Ambient temperature uncertainty = ±1 K.

$$u_{j\ temperature\ uncertainty} = \frac{\sqrt{\left(\frac{(1\mathrm{K})^2}{3}\right) \times \left((4\%/\mathrm{K})^2 + (1.2\%/\mathrm{K})^2\right)}}{23} = 0.10\mathrm{dB}$$

Note: *The μ_{power_avg} and μ_{power_std} are used as percentage changes per Kelvin and temperature v_{temp} in Kelvin.*

TIS test

The ambient temperature uncertainty $\pm v$ in Kelvin is converted to a level uncertainty by means of formula 5.2 in ETSI TR 100 028 Part 1. The test laboratory making the measurements may, by means of additional measurements, estimate its own influence quantity dependencies, but if this is not carried out the values stated in table F.1 in ETSI TR 100 028 Part 2 should be used as worst-case values.

The standard uncertainty shall be calculated as:

$$u_{j\,temperatureuncertainty} = \frac{\sqrt{\left(\frac{(v_{temp})^2}{3}\right) \times \left((\mu_{voltage_avg})^2 + (\mu_{voltage_std})^2\right)}}{11.5} dB$$

where

$\mu_{voltage_avg}$ is mean value of voltage measurement in percentage per Kelvin (%/K). A worst-case value is 2.5 %/K for k=2 (see ETSI TR 100 028 Part 2).

$\mu_{voltage_std}$ is standard deviation of voltage dependence per Kelvin. A worst-case value is 1.2 %/K for k=2 (see ETSI TR 100 028 Part 2).

Example of a typical measurement uncertainty calculation:

Ambient temperature uncertainty = ±3 K.

$$u_{j\ temperature\ uncertainty} = \frac{\sqrt{\left(\frac{(3[\mathrm{K}])^2}{3}\right) \times \left((2.5[\%/\mathrm{K}])^2 + (1.2[\%/\mathrm{K}])^2\right)}}{11.5} = 0.42\mathrm{dB}$$

Note: *The $\mu_{voltage_avg}$ and $\mu_{voltage_std}$ are used as percentage changes per Kelvin and temperature v_{temp} in Kelvin.*

G.10 Uncertainties of Head, Hand and Positioning of EUT in the Hand and Against the Head Phantoms

This uncertainty component arises from:

- The tolerance of head shape, shell thickness and dielectric parameters and mounting construction
- The tolerance of hand shape and mounting fixture
- Positioning the phone in the hand and the hand with the phone at the head with respect to the definitions provided in Appendix A.

The combined uncertainty of head, hand and EUT positioning in the hand and against the head phantoms as defined in Section 7 shall be determined as:

TABLE G-2 STANDARD UNCERTAINTIES FOR THE HEAD, HAND AND EUT POSITIONING IN THE HAND AND AGAINST THE HEAD

Description of uncertainty contributions	Standard Uncertainty, dB
Head Phantom Uncertainty	See Appendix G.10.2
Hand Phantom Uncertainty	See Appendix G.10.3 and Appendix G.10.8

TABLE G-2 STANDARD UNCERTAINTIES FOR THE HEAD, HAND AND EUT POSITIONING IN THE HAND AND AGAINST THE HEAD

Description of uncertainty contributions	Standard Uncertainty, dB
Head Phantom Fixture Uncertainty	See Appendix G.10.4
Hand Phantom Fixture Uncertainty	See Appendix G.10.4 and Appendix G.10.8
Phone Positioning Uncertainty	See Appendix G.10.5 and Appendix G.10.8
Combined Standard Uncertainty (root-sum-squares)	

G.10.1 Concept of Phantom and Positioning Uncertainties

The uncertainty components and the guidelines for their evaluation are such that the values can be assessed independent of the chamber performance, e.g., by the vendors. They shall represent the maximum uncertainty for the determination of TRP and TIS:

The measurement uncertainty estimate shall include the following frequency bands:

- 700-900 MHz
- 1500-2200 MHz
- 2300-2800 MHz

The selected phones used in the evaluation shall enable to extrapolate the uncertainty to the entire phone population. Since the evaluation effort per phone can be significant, the total number of phones to be used in the evaluation is limited for practical reasons. Therefore worst-case considerations combined with statistical methods shall be applied. For guidance, see NIST [9].

The number of phones shall be at least six and include at least:

- Two monoblock phones (fixed or portrait slides),
- Two fold phones,
- Two with antennas at the top, and
- Two with antennas at the bottom of the phone.

The applied evaluation techniques, the rational for the selection of phones and frequencies, obtained results and extrapolations for obtaining the required coverage factors shall be documented and made available to the reviewing bodies.

G.10.2 Head Phantom Uncertainty

The head phantom uncertainty is the effect of the tolerances of the inner and outer surface shape, the dielectric parameters and the shell thickness, as well as the supporting materials

except the head phantom fixture. The transformations of these tolerances to uncertainties for TRP/NHPRP/UHRP/PGRP have been studied in *The Uncertainties and Repeatability Limitations of Transmitter and Receiver Performance Assessments Posed by Head Phantoms* [3]**.** The following approximations (Equation G.25 through Equation G.28) shall be used to determine the head uncertainty for both orientations, i.e., vertical and horizontal orientation, where a rectangular distribution shall be assumed:

EQUATION G.25

$$u_{head_phantom_shell}[dB] = c_1 \cdot \left[10 \cdot \log_{10}\left(1 + \left|\frac{\Delta d}{d}\right|\right)\right]$$

EQUATION G.26

$$u_{head_phantom_permittivity}[dB] = c_2 \cdot \left[10 \cdot \log_{10}\left(1 + \left|\frac{\sqrt{\Delta\varepsilon^2 + \Delta\varepsilon_{unc}^2}}{\varepsilon}\right|\right)\right]$$

EQUATION G.27

$$u_{head_phantom_conductivity}[dB] = c_3 \cdot \left[10 \cdot \log_{10}\left(1 + \left|\frac{\sqrt{\Delta\sigma^2 + \Delta\sigma_{unc}^2}}{\sigma}\right|\right)\right]$$

EQUATION G.28

$$u_{head_phantom_shape}[dB] = c_4 \cdot \left[10 \cdot \log_{10}\left(1 + \left|\frac{\Delta shape}{shape}\right|\right)\right]$$

where

The weighting factor $c_1 = 0.10$ as determined according to Appendix I and documented in *The Uncertainties and Repeatability Limitations of Transmitter and Receiver Performance Assessments Posed by Head Phantoms* [3]. Δd is the maximum deviation from the nominal shell thickness d (see Appendix C) from the CAD file, whereas the maximum tolerable deviation is ±0.2 mm. This tolerance must be verified for an area as wide as ±50 mm symmetric to the line connecting the Ear Reference Point to the Mouth Point (line extending from the ear reference point to 20 mm below the mouth point as well as for the surface of the ear). The measurements can be conducted with a properly calibrated inductive thickness measurement instrument. The corresponding measurement documentation can be provided by the vendor of the head phantom, which only requires validation if the head phantom has visually degenerated.

$\Delta\varepsilon$ and $\Delta\sigma$ are the tolerances from the target relative permittivity and conductivity of the head material, respectively, where the maximum tolerance shall be ±20%. Weighting factor c_2 = 0.39 and weighting factor c_3 = 0.065 were determined according to the methodology of Appendix I [3].

$\Delta\varepsilon_{unc}$ and $\Delta\sigma_{unc}$ are expanded measurement uncertainties (k = 2) of dielectric parameters according to Appendix G.10.6.

$\Delta shape$ is the tolerance of the inner surface of the shell. If the tolerance is within 2% from that specified in the SAM CAD file provided in IEEE 1528-2002 [10] and maintained in this boundary range during the entire measurement cycle, the effect of the head phantom shape can be neglected, i.e., weighting factor c_4 = 0. If the tolerance is larger, a numerical study as outlined in Appendix I must be conducted to determine $\Delta shape$.

G.10.3 Hand Phantom Uncertainty

The hand phantom makes a contribution to OTA measurement uncertainty due to the manufacturing tolerances of its dielectric properties and shape [11]. In this section, the requirements for acceptance of the hands are defined and how the uncertainty of the hands, that meet the minimal requirements, is determined.

The dielectric properties on the surface of the hand may differ from those of its interior, so both are included in the evaluation. The molded exterior surface of the hand shall be measured directly with an open-ended coaxial probe. The interior hand material is evaluated indirectly, by substituting a cube-shaped sample molded from the same material and having some exterior surfaces removed. The full protocol for evaluating the hand phantom material is as follows:

1. Each hand shall be manufactured together with a reference cube of the same material. The sides of the reference cube shall be not less than 40 mm in length.
2. The molded surface on three orthogonal sides of the cube shall be sliced away to a depth of at least 3 mm, in order to expose interior material for evaluation. The remaining three sides of the cube shall be left untreated.
3. Relative permittivity and conductivity shall be measured at ten specified points on the hand exterior surface (see Figure G-1 through Figure G-4), and the exterior averages ($\varepsilon_{ext_{avg}}$, $\sigma_{ext_{avg}}$, 10 points) and standard deviations ($\varepsilon_{ext_{std}}$, $\sigma_{ext_{std}}$, 10 points) calculated accordingly. If a non-standard handgrip is used, then select 10 points on the hand exterior surface similar to those shown in Figure G-1 through Figure G-4.
4. Relative permittivity and conductivity shall be measured at ten different points on each of the three cut, exposed surfaces of the reference cube, and the combined interior averages ($\varepsilon_{\mathrm{int}_{avg}}$, $\sigma_{\mathrm{int}_{avg}}$, 30 points) and standard deviations ($\varepsilon_{\mathrm{int}_{std}}$, $\sigma_{\mathrm{int}_{std}}$, 30 points) shall be calculated. Individual interior averages for each of these three sides ($\varepsilon_{\mathrm{int}_i}$, σ_{int_i} , 10 points) shall also be calculated.
5. The total averages (ε_{avg} , σ_{avg}) shall be calculated as the average of exterior and interior values by either evaluating all data points or using:

$$\left(\varepsilon_{avg} = \frac{\varepsilon_{ext_{avg}} + 3 \cdot \varepsilon_{\text{int}_{avg}}}{4} \, , \; \sigma_{avg} = \frac{\sigma_{ext_{avg}} + 3 \cdot \sigma_{\text{int}_{avg}}}{4} \right)$$

6. The total standard deviations ($\varepsilon_{std}, \sigma_{std}$) shall be calculated as the statistical combination of exterior and interior values by either evaluating all data points or using:

$$\left(\varepsilon_{std} = \sqrt{\frac{1}{4}\left(\varepsilon^2_{ext_{std}} + \varepsilon^2_{ext_{avg}} + 3 \cdot \left(\varepsilon^2_{\text{int}_{std}} + \varepsilon^2_{\text{int}_{avg}}\right)\right) - \varepsilon^2_{avg}} \; , \right.$$
$$\left. \sigma_{std} = \sqrt{\frac{1}{4}\left(\sigma^2_{ext_{std}} + \sigma^2_{ext_{avg}} + 3 \cdot \left(\sigma^2_{\text{int}_{std}} + \sigma^2_{\text{int}_{avg}}\right)\right) - \sigma^2_{avg}} \right)$$

7. The hands are acceptable, i.e., meeting the minimal requirements, if:
   a. ε_{avg} deviate by less than 15% from the target values
   b. σ_{avg} deviate by less than 25% from the target values
   c. the difference between the averaged permittivity of each 10-point interior surface ($\varepsilon_{\text{int}_{avg}}$) deviates by less than 10% and ($\varepsilon_{ext\,avg}$) by less than 20% from the total average ε_{avg}
   d. the difference between the averaged conductivity of each 10-point interior surface ($\sigma_{\text{int}_{avg}}$) deviates by less than 20% and ($\sigma_{ext\,avg}$) by less than 30% from the total average σ_{avg}
   e. the standard deviation of the combined measurements (30 interior points and 10 exterior points) is less than 20% for permittivity ε_{std} and less than 40% for conductivity σ_{std}
8. For the hands meeting the minimal requirements of step 7., the following approximations (Equation G.29 through Equation G.31) shall be used to determine the hand uncertainty where a rectangular distribution is assumed. The total standard uncertainty (root-sum-squares of $u_{hand_phantom_permittivity}$, $u_{hand_phantom_conductivity}$, $u_{hand_phantom_shape}$)
   shall not exceed 0.5 dB:

EQUATION G.29

$$u_{hand_phantom_permittivity}[dB] = c_1 \cdot \left[10 \cdot \log_{10}\left(1 + \left| \frac{\sqrt{\Delta\varepsilon^2_{avg} + \varepsilon^2_{unc} + (a_1\varepsilon_{std})^2}}{\varepsilon} \right| \right) \right]$$

EQUATION G.30

$$u_{hand_phantom_conductivity}[dB] = c_2 \cdot \left[\overline{10 \cdot \log_{10}\left(1 + \left| \frac{\sqrt{\Delta\sigma_{avg}^2 + \sigma_{unc}^2 + (a_1\sigma_{std})^2}}{\sigma} \right| \right)} \right]^-$$

EQUATION G.31

$$u_{hand_phantom_shape}[dB] = c_3 \cdot \left[\overline{10 \cdot \log_{10}\left(1 + \left| \frac{\Delta shape}{shape} \right| \right)} \right]^-$$

whereby,

$\Delta\varepsilon_{avg}$, $\Delta\sigma_{avg}$, ε_{std} , σ_{std} are the values determined as defined above and ε_{unc} and σ_{unc} are expanded measurement uncertainties (k = 2) of the dielectric parameters according to Appendix G.10.6 determined for homogeneous materials.

The cube will be provided together with the hand such that the user can evaluate if the interior (cube) properties of the hand has degenerated over time by performing the test above. c_1 = 0.78, c_2 = 0.39 and a_1 = 0.50 were determined according to the methodology of Appendix I. OCP measurements at the surface of used hands may change over time with minimal impact on OTA evaluations due to the sensitivity of the OCP method on surface contamination.

$\Delta shape$ is the uncertainty on TRP/NHPRP/UHRP/PGRP, resulting from the tolerance of the hand phantom shape. Since the hands are usually manufactured within models, the tolerance is 2% and therefore the effect is negligible, i.e., c_3 = 0. If the tolerance is larger, a numerical study as outlined in Appendix I must be conducted to determine $\Delta shape$.

FIGURE G-1 TEN LOCATIONS OF DIELECTRIC MEASUREMENTS AT THE BRICK HAND SURFACE

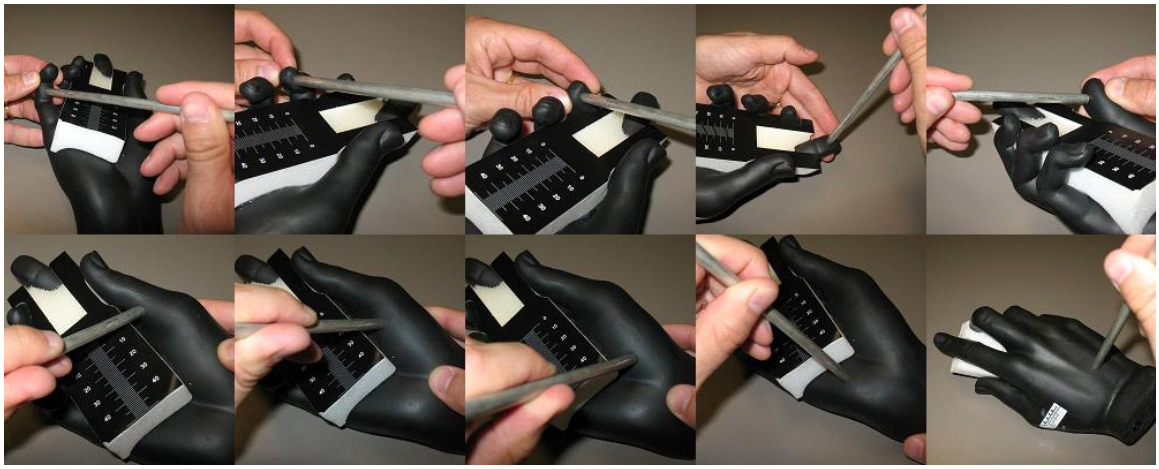

FIGURE G-2 TEN LOCATIONS OF DIELECTRIC MEASUREMENTS AT THE FOLD HAND SURFACE

FIGURE G-3 TEN LOCATIONS OF DIELECTRIC MEASUREMENTS AT THE NARROW DATA HAND SURFACE

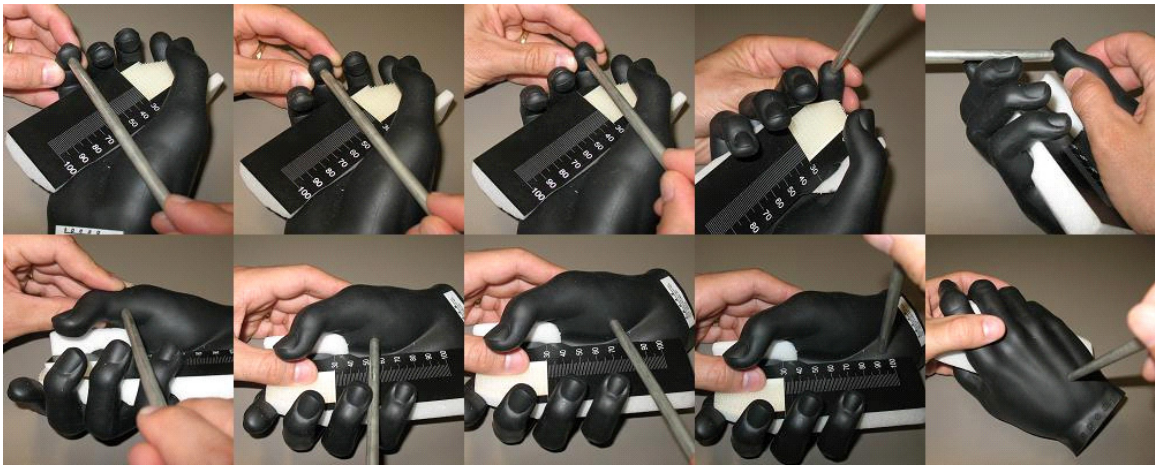

FIGURE G-4 TEN LOCATIONS OF DIELECTRIC MEASUREMENTS AT THE PDA HAND SURFACE

G.10.4 Head and Hand Phantom Fixtures Uncertainty

The head and hand phantom fixtures uncertainty is the effect of the head and hand phantom fixtures on the TRP/NHPRP/UHRP/PGRP compared to the standard configuration with an ideally RF transparent fixture. The head phantom fixture is the adapter between the mounting structure or head adapter connected to the turntable and head. The hand fixture is the fixture with which the hand with the phone can be appropriately positioned at the head. They shall be constructed with low-loss dielectric material with a dielectric constant of less than 5 and a loss tangent of less than 0.05 for frequencies between 300 MHz-6 GHz and the proof of compliance has to be documented (these material parameters can be determined using the methods described in Appendix H). Any metallic parts such as screws shall not exceed 10 mm in any dimensions. The head and hand phantom fixtures and the mounting structure can be evaluated combined or separately, as described in Appendix G.10.4.1 and Appendix G.10.4.2. Two methods, an experimental and a numerical technique, are proposed to obtain an uncertainty estimate. If the uncertainties are evaluated individually the combined uncertainty shall be determined by root-sum-squares since the directional distortions can be considered independent. The effect of the fixture is frequency dependent and shall be evaluated (at a minimum) at the middle channel of the 3GPP Band 41, PCS, & Cell bands in order to estimate the uncertainty of the 2300-2800 MHz, 1500-2200 MHz and the 700-900 MHz bands, respectively.

G.10.4.1 Experimental Evaluation

The following procedure allows evaluation of the RF impact of any additional support structure or fixtures used to hold the hand phantom against the side of the head phantom.

Repeated TRP tests with and without the fixtures in place are used to estimate the resulting measurement uncertainty using a Type A analysis.

For the purpose of this test it is necessary to rigidly attach each phone and hand combination to the head in order to evaluate the TRP with and without the supporting fixture in place. This may be accomplished using a minimum of cellophane tape and expanded polystyrene foam as required to support the phone and hand, while avoiding significant impact on the radiation pattern of the EUT. In order to provide sufficient variation in radiation pattern and near-field coupling effects, at least six different EUTs (three monoblock and three fold phones), each having significantly different antenna types, shall be used. At least one phone shall have an antenna at the base of the phone, one shall have an extended antenna, and one phone shall have an antenna embedded in the back of the phone. All phones used in the study should be well characterized and known to be stable.

The RF evaluation shall be performed at the middle channel of the 3GPP Band 41, PCS and Cell bands for each phone used in order to estimate the uncertainty of the 2300-2800 MHz, 1500-2200 MHz and the 700-900 MHz bands, respectively.

For each phone, repeat the following steps:

1. Record the phone model, style, description, ESN, and any other identifying information.
2. Set up and verify proper operation of the OTA test system.
3. Mount the phone in the appropriate hand phantom and attach rigidly to the head phantom as described in Appendix A, and place the head/hand/phone combination in the test system.
4. Perform a TRP test at each required channel, repeating the test three times.
5. Install the hand support structure, positioning it in a manner representative of the way it would be oriented in order to hold the hand phantom in its current position, taking care to avoid moving the hand phantom and phone relative to the head phantom.
6. Measure the TRP of the head/hand/phone/fixture combination at each required channel, and repeat the test a total of five times.
7. Remove the hand support structure and repeat the TRP test on the head/hand/phone combination an additional three times.
8. Calculate the TRP and NHPRP values for each measurement as specified in Appendix B, as well as the UHRP (Upper Hemisphere Radiated Power) and PGRP (Partial GPS Radiated Power) corresponding to the UHIS and PIGS values.
9. For each test frequency, determine the average and standard deviation of each value across the six head/hand/phone only tests.
10. Subtract the average values from the corresponding values for each of the head/hand/phone/fixture tests and determine the absolute maximum of each value.

Once each phone has been tested in this manner, perform the following analysis to determine the uncertainty estimate for this support fixture.

1. Determine the maximum of each TRP/NHPRP/UHRP/PGRP delta across all phones.
2. Convert each of these values, X_{Max}, to a standard uncertainty assuming a rectangular distribution ($u_{X_{Max}j} = X_{Max} / \sqrt{3}$).
3. Average the standard deviation of each TRP/NHPRP/UHRP/PGRP across all reference (head/hand/phone only) tests. This value represents the standard uncertainty inherent in the repeatability of the test system.
4. Determine the standard uncertainty of each TRP/NHPRP/UHRP/PGRP value using the following formula:

   $$u_{Xj} = \sqrt{u^2_{X_{Max}j} - \overline{\sigma}^2}$$

   In the event that $u_{XMax\,j}$ is less than the repeatability standard uncertainty, $\overline{\sigma}$, then u_{Xj}=0.
5. The maximum u_{Xj} from the TRP/NHPRP/UHRP/PGRP values shall then be used as the standard measurement uncertainty estimate, u_j, for the fixture. If the maximum u_{Xj}, u_{XjMax}, is less than the average of all $\overline{\sigma}$ for the various radiated power quantities at a given frequency, $\overline{\overline{\sigma}}$, (indicating that the effect of the support structure cannot be clearly extracted from the noise of the repeatability) then the required u_j shall be given by the following formula:

   $$u_j = \sqrt{\frac{u^2_{Xj_{Max}} + \overline{\overline{\sigma}}^2}{2}}$$

G.10.4.2 Numerical Evaluation

The study shall be conducted according to Appendix I by comparing the differences between TRP/NHPRP/UHRP/PGRP with and without fixtures.

G.10.5 Phone Positioning Uncertainty

The phone positioning is the largest phantom related uncertainty and requires careful assessment, especially since it depends on the skills and care of the person conducting the tests. The position of the phone affects the electromagnetic loading with respect to the hand and head, the scattering and absorption properties, orientation with respect to the evaluation plan, etc. The effect of this tolerance on TRP/NHPRP/UHRP/PGRP not only depends on the deviation of the position, but also depends strongly on the phone and frequency. Two methods, an experimental and a numerical technique, are proposed to obtain an uncertainty

estimate based on a maximum expected position variation. In order to determine this maximum position variation, the lab must evaluate how their personnel place the EUT on the phantom(s) using any available fixturing, as well as any flexure in their test setup that can cause the position to vary, and then use that maximum positional variation to determine the overall RF impact of the expected variation.

To determine the expected positioning repeatability by the lab technicians a variety of different phone styles, shapes, and sizes shall be evaluated. At a minimum, at least six different phones as described in Appendix G.10.5.1 shall be evaluated. For each phone, perform the following steps:

1. Instruct each technician to attach the phone to the head and/or hand as directed in Appendix A using whatever fixturing is to be used regularly. The technician shall not be "coached" to produce the best setup, although prior training to ensure that the technicians are aware of the proper methodology is recommended.
2. For all phone setups, have an independent observer record the position of the phone relative to the available reference marks on the head and/or hand phantom, as well as the position of the hand relative to the head, when applicable. Recorded information should represent both position offsets in three dimensions as well as angular rotations about three orthogonal axes. It is highly recommended that a repeatable system of photography (e.g., camera(s) on tripod(s) at unchanged or precisely marked locations relative to the head/hand) be used to photograph each setup to allow overlaying the various photographs to evaluate the range of variation in position/orientation from multiple directions (e.g., top, front, and side).
3. For systems where the head/hand combination rotates around a horizontal axis, such that the effect of gravity on the mounting will change throughout the test, the variation in mounting position shall be evaluated as a function of orientation. In this case, mount the head/hand/EUT combination as used and compare the relative positions of the EUT and hand at no less than four positions (every 90 degrees in an above, below, left, right orientation)
4. Repeat steps 1-3 for each technician in the lab, ensuring that each mounting process is started from the same completely disassembled state. For labs with a small number of technicians, the mounting should be repeated multiple times by each technician to produce at least five separate mountings per phone.
5. Repeat steps 1-4 for all technicians.
6. For each phone, determine the maximum variation between the set of mountings (random error), as well as the maximum deviation from the target reference points described in Appendix A (systematic error contribution). Combine the two contributions into a single rectangular quantity for each measured dimension of variation using the following formula:

$$v_j = \sqrt{v_{random\ \ j}^2 + v_{systematic\ \ j}^2}$$

In the case where the RF evaluation will be performed on equivalent phone models to those evaluated here, the corresponding variation quantities for each phone model may be used. Otherwise, the maximum variation across all evaluated phone models shall be used for the RF uncertainty evaluation. It is recommended that this procedure is repeated whenever a technician is added to the team.

For relative measurements, if the phone is not handled between measuring both test configurations, then the additional uncertainty due to the positioning error of the EUT with the head/hand phantom will be 0.00 dB for this measurement. Otherwise, this uncertainty should be included twice, once in the reference TRP/TIS measurement, and once in the relative measurement.

G.10.5.1 Experimental Evaluation

The following procedure allows evaluation of the RF impact of the expected positioning uncertainty based on the analysis performed above. Repeated TRP tests with intentional deviations matching those found in the previous analysis shall be used, using any corresponding fixturing, etc. In order to provide sufficient variation in radiation pattern and near-field coupling effects, at least six different EUTs (three monoblock and three fold phones), each having significantly different antenna types, shall be used. At least one phone shall have an antenna at the base of the phone, one shall have an extended antenna, and one phone shall have an antenna embedded in the back of the phone. All phones used in the study should be well characterized and known to be stable.

The RF evaluation shall be performed at the middle channel of the 3GPP Band 41, PCS and Cell bands for each phone used in order to estimate the uncertainty of the 2300-2800 MHz, 1500-2200 MHz and the 700-900 MHz bands, respectively.

For each phone, repeat the following steps:

1. Record the phone model, style, description, ESN, and any other identifying information.
2. Set up and verify proper operation of the OTA test system.
3. Mount the phone in the appropriate hand phantom and attach to the head phantom as described in Appendix A, offsetting the phone from the target position by the maximum offsets found through the procedure in the previous section.
4. Place the head/hand/phone combination in the test system and measure the TRP at each required channel.
5. Choose the maximum deviation dimension and adjust the phone/hand combination so that it is offset in the opposite direction (reverse the sign of the deviation) and repeat step 4.
6. Choose the next largest deviation and repeat the adjustment for that dimension and repeat step 4.
7. Flip the sign on the first deviation again to put that offset back to its starting position and repeat step 4. At this point, four cardinal positions with the maximum deviation shall have been tested.
8. Continue swapping the sign of the remaining deviation quantities, adjusting the position of the phone, and remeasuring the TRP until no less than six distinctly different positions with the maximum position variation have been evaluated.
9. Calculate the TRP and NHPRP values for each measurement as specified in Appendix B, as well as the UHRP and PGRP corresponding to the UHIS and PIGS values.
10. For each test frequency, determine the average and standard deviation of each value across the six (or more) head/hand/phone tests.

Once each phone has been tested in this manner, perform the following analysis to determine the uncertainty estimate for the positioning repeatability.

11. Determine the maximum of each TRP/NHPRP/UHRP/PGRP delta across all phones.
12. Convert each of these values, X_{Max}, to a standard uncertainty assuming a rectangular distribution ($u_{Xj} = X_{Max} / \sqrt{3}$).
13. The maximum <average> u_{Xj} from the TRP/NHPRP/UHRP/PGRP values shall then be used as the standard measurement uncertainty estimate, u_j, for the positioning repeatability.

G.10.5.2 Numerical Evaluation

Alternatively, a Type A uncertainty analysis can be conducted using high-end simulation tools supporting scripting of mechanical positioning. The first step of the procedure, as described in Appendix G.10.5.1, is conducted without measurement. A mechanical position matrix is derived for which the analysis is conducted following the procedures described in Appendix I. The evaluation of the obtained data is also evaluated according to Step 11 of Appendix G.10.5.1.

The following approximation (Equation G.32) shall be used to determine the phone positioning uncertainty:

EQUATION G.32

$$u_{positioning}[dB] = \sqrt{\left(k_1 \cdot |h|\right)^2 + \left(k_2 \cdot |v|\right)^2 + \left(k_3 \cdot |r_1|\right)^2 + \left(k_4 \cdot |r_2|\right)^2}$$

where:

h is the horizontal deviation (see Figure G-5) in mm from the exact position described in Appendix A and must be determined according to the procedure defined below.

v is the vertical deviation (see Figure G-5) in mm from the exact position described in Appendix A and must be determined according to the procedure defined below.

r_1 and r_2 are angular deviations (see Figure G-5) in degrees from the exact position described in Appendix A and must be determined according to the procedure defined below.

$k_1 = 0.18$, $k_2 = 0.07$, $k_3 = 0.14$ and $k_4 = 0.44$ are the sensitivity factors which were determined according to the methodology of Appendix I. The maximum sensitivity has been expanded by the number of degrees of freedom. If the maximum deviations for h, v, r_1 and r_2 are taken, then a rectangular distribution (divisor = 1.73) shall be used. If h, v, r_1 and r_2 are determined as standard deviations, then a normal distribution (divisor = 1) shall be used in Table G-4. These equations are only valid for h and $v \leq 5$ mm and r_1 and $r_2 \leq 2$ degrees.

FIGURE G-5 PHONE POSITIONING UNCERTAINTY COMPONENTS

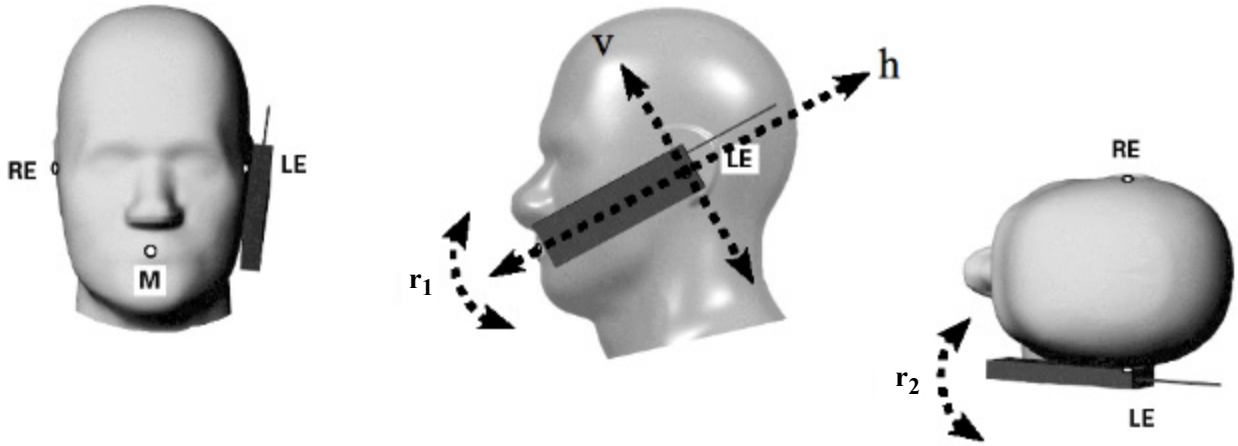

G.10.6 Estimation of Dielectric Parameter Measurement Uncertainties

The measurement procedures described in Appendix G use vector network analyzers for dielectric property measurements. Network analyzers require calibration in order to account for and remove inherent losses and reflections. The uncertainty budget for dielectric measurement contains inaccuracies in the calibration data, analyzer drift, and random errors. Other sources of errors are the tolerances on the sample holder hardware, and deviations from the optimal dimensions for the specified frequencies, and sample properties and dimensions. This applies regardless of the type of sample holder and the nature of the scattering parameters being measured.

An example uncertainty template is shown in Table G-3**.** Influence quantities shown may or may not apply to a specific test set-up or procedure, and other components not listed may be relevant in some test set-ups. The contributions also depend on the frequency and the type of sample (liquid, gel or solid). Measurement of well-characterized reference materials can be used to estimate the dielectric property measurement uncertainty, as described in the following procedure.

Note: *Due to the inability to assess the measurement uncertainty of the solid tissue equivalent material for the head phantom, the use of solid head phantoms is not allowed in the test plan at this time.*

1. Configure and calibrate the network analyzer in a frequency span large enough for the frequency range of interest, for example from 300 MHz to 3 GHz in 5 MHz steps, or with five or more frequencies within the device transmission band.
2. Measure a reference material at least *n* times to obtain the average and standard deviation for the relative permittivity and conductivity at each device centre-band and nearby frequencies.

3. For each of the test runs from step 2, to verify calibration validity versus frequency, calculate the differences between the measured and corresponding reference data at five or more frequencies within the device transmission band using the equations.

$$\varepsilon'_{r\ tolerance}\ [\%] = 100 \times \left| \frac{\varepsilon'_{r\ measured} - \varepsilon'_{r\ ref}}{\varepsilon'_{r\ ref}} \right|$$

$$\sigma_{tolerance}\ [\%] = 100 \times \left| \frac{\sigma_{measured} - \sigma_{ref}}{\sigma_{ref}} \right|$$

4. Use predetermined standard deviations for permittivity and conductivity if available. Otherwise, calculate the standard deviation of the mean ($s/\sqrt{n}$), e.g., *NIS 81* [12], using the maximum value versus frequency for the n separate permittivity and conductivity tolerances of step 3.
5. Estimate the uncertainties for the other components of Table G-3 (and other relevant components if needed) in the frequency range under consideration.
6. The individual uncertainties for ε_r' and σ each are entered into the columns a, b, c of Table G-3 to calculate the standard uncertainties u_i and the combined standard uncertainty. Insert a completed version of Table G-3 into the test report, along with rationale for which influence quantities were used or omitted.
7. Measure a second reference material to verify relative calibration validity, and ascertain that the measured data agrees with the reference values as in step 3. If equipment drift is suspected, go back to the reference material tests of step 2.

TABLE G-3 EXAMPLE OF UNCERTAINTY TEMPLATE FOR DIELECTRIC CONSTANT (ε_r') OR CONDUCTIVITY (σ) MEASUREMENT AT A SPECIFIC FREQUENCY BAND[1]

	a		***b***	***c***	$u_i = (a/b) \times (c)$	
Uncertainty Component	**Tolerance/ Uncertainty Value (± %)**	**Probability Distribution**	**Divisor**	c_i	**Standard Uncertainty (± %)**	v_i or v_{eff}
Repeatability (n repeats, mid-band)		Normal	1[2]	1		n-1
Reference material ε_r' or σ		Rectangular	$\sqrt{3}$	1		∞
Network analyzer drift, linearity, etc.		Rectangular	$\sqrt{3}$	1		∞
Test-port cable variations		U-shaped	$\sqrt{2}$	1		∞

TABLE G-3 EXAMPLE OF UNCERTAINTY TEMPLATE FOR DIELECTRIC CONSTANT (ε_r') OR CONDUCTIVITY (σ) MEASUREMENT AT A SPECIFIC FREQUENCY BAND[1]

	a		***b***	***c***	$u_i = (a/b) \times (c)$	
Uncertainty Component	**Tolerance/ Uncertainty Value (± %)**	**Probability Distribution**	**Divisor**	c_i	**Standard Uncertainty (± %)**	v_i or v_{eff}
Dimensional accuracy of the sample / line		Normal	1^2	1		∞
Homogeneity of the material		Normal	1^2	1		∞
Temperature of the material		Rectangular	$\sqrt{3}$	1		∞
Combined standard uncertainty						
Expanded uncertainty $k = 2$						

Note 1: Column headings *a*, *b*, *c* are given for reference. Separate tables are usually needed for each *er'* and *s*.

Note 2: Assumes the uncertainty value in column a is the standard deviation of a normal distribution. For an expanded uncertainty of a normal distribution, divide by 2.

Uncertainty contributions

Repeatability: Refer to evaluation of step 4) above.

Reference material: Uncertainty of the available reference data.

Network analyzer: Drift, Linearity and other contributions affecting the capability to measure attenuation and phase at the specific frequency.

Test-port cable variations: Influence of cable variations on amplitude and phase measurement

Dimensional accuracy of the sample/line: The reference line is assumed to be an precision 50 Ohm line with a section of air dielectric. With the section of this line filled with the sample material must be well known in length, not change the dimensions of the line, and fill the space without gaps at the inner or outer conductor.

Homogeneity of the material: Inhomogeneities of the material composition or inclusion of air affects the measurement. S21 or S12 should not differ significantly.

Temperature of the material: Influence of changes of the dielectric properties of the sample or reference material with the temperature, as far as not compensated.

Alternative method for evaluating uncertainties can be found in *Dielectric Metrology with Coaxial Sensors* [13].

G.10.7 Uncertainty for Reasonably Worst-case Head, Hand and EUT Positioning in the Hand and Against the Head

The uncertainty for reasonably worst-case head, hand and EUT positioning in the hand and against the head are provided in Table G-4.

TABLE G-4 EXAMPLE OF UNCERTAINTY ASSESSMENT FOR REASONABLY WORST-CASE HEAD, HAND AND EUT POSITIONING IN THE HAND AND AGAINST THE HEAD

	a		***b***	***c***	$u_i = (a/b) \times (c)$	
Uncertainty Component	**Tolerance/ Uncertainty Value (± dB)**	**Probability Distribution**	**Divisor**	c_i	**Standard Uncertainty (± dB)**	v_i or v_{eff}
Head Phantom						
Shell Thickness	0.41	Rectangular	1.73	0.10	0.02	∞
Filling/Liquid Dielectric Constant	0.46	Rectangular	1.73	0.39	0.10	∞
Filling/Liquid Conductivity	0.81	Rectangular	1.73	0.065	0.03	∞
Geometry/Shape	1.00	Rectangular	1.73	0.00	0.00	∞
Supporting Structure Uncertainty		Rectangular				
Combined Head Phantom Uncertainty					0.11	
Hand Phantom						
Material Dielectric Constant	0.59	Rectangular	1.73	0.78	0.26	
Material Conductivity	1.10	Rectangular	1.73	0.39	0.25	
Geometry/Shape (incl. spacer)	1.00	Rectangular	1.73	0.00	0.00	

TABLE G-4 EXAMPLE OF UNCERTAINTY ASSESSMENT FOR REASONABLY WORST-CASE HEAD, HAND AND EUT POSITIONING IN THE HAND AND AGAINST THE HEAD

	a		*b*	*c*	$u_i = (a/b) \times (c)$	
Uncertainty Component	**Tolerance/ Uncertainty Value (± dB)**	**Probability Distribution**	**Divisor**	c_i	**Standard Uncertainty (± dB)**	v_i or v_{eff}
Combined Hand Phantom Uncertainty					0.36	
Fixtures						
Head Phantom Fixture	0.25	Rectangular	1.73	1.00	0.14	
Hand Phantom Fixture	0.40	Rectangular	1.73	1.00	0.23	
Data Mode Fixture	0.16	Rectangular	1.73	1.00	0.09	
EUT Related						
EUT Positioning	0.58	Rectangular	1.73	1.00	0.33	
Combined Standard Uncertainty (Head+Hand+Fixture)					0.57	
Combined Standard Uncertainty (Hand+Fixture)					0.37	

Head Phantom				
	Δd	d	a	**Reference** Equation G.25
Shell Thickness Uncertainty Component	0.2	2	0.41	
	$\Delta\varepsilon/\varepsilon$	$\Delta\varepsilon_{unc}/\varepsilon$	a	**Reference** Equation G.26
Filling/Liquid Dielectric Constant	0.1	0.05	0.46	
	$\Delta\sigma/\sigma$	$\Delta\sigma_{unc}/\sigma$	a	**Reference** Equation G.27
Filling/Liquid Conductivity	0.2	0.05	0.81	

Hand Phantom						
	$\Delta\varepsilon_{avg}/\varepsilon$	$\varepsilon_{unc}/\varepsilon$	$\varepsilon_{std}/\varepsilon$	a_1	a	Reference Equation G.29
Material Dielectric Constant	0.1	0.03	0.2	0.5	0.59	
	$\Delta\sigma_{avg}/\sigma$	σ_{unc}/σ	σ_{std}/σ	a_1	a	Reference Equation G.30
Material Conductivity	0.2	0.05	0.4	0.5	1.10	

EUT Related						
	h (mm)	v (mm)	r_1 (deg)	r_2 (deg)	a	Reference Equation G.32
EUT Positioning	2.5	2	2	0.5	0.58	

G.10.8 Uncertainties of Hand Phantom Fixture and Phone Positioning in Data Mode Testing

The hand phantom uncertainty shall be evaluated according to Appendix G.10.3. The hand phantom data mode fixture uncertainty shall be evaluated according to Appendix G.10.4. If the uncertainty of positioning of the phone inside the hand is less than ±1 mm, then this uncertainty is negligible. Otherwise, it shall be evaluated according to Appendix G.10.5. Phone (including hand phantom) positioning uncertainty is performed according to Appendix G.21.

TABLE G-5 EXAMPLE OF UNCERTAINTY ASSESSMENT FOR HAND PHANTOM, FIXTURE AND PHONE POSITIONING IN DATA MODE TESTING

	a		***b***	***c***	$u_i = (a/b) \times (c)$	
Uncertainty Component	**Tolerance/ Uncertainty Value (± dB)**	**Probability Distribution**	**Divisor**	c_i	**Standard Uncertainty (± dB)**	v_i or v_{eff}
Hand Phantom						
Material Dielectric Constant		Rectangular	$\sqrt{3}$			∞
Material Conductivity		Rectangular	$\sqrt{3}$			∞
Geometry/Shape (incl. spacer)		Rectangular	$\sqrt{3}$			∞
Fixture						
Hand Phantom Fixture		Rectangular	$\sqrt{3}$			∞
EUT Related						
EUT Positioning inside Hand Phantom	0	Rectangular	$\sqrt{3}$			∞
EUT (including Hand Phantom) Positioning		Rectangular	$\sqrt{3}$			∞
Combined standard uncertainty						

G.11 Sensitivity Search Step Size

Rather than adjusting the output power of the base station simulator until the digital error rate (BER or FER) is within some narrow percentage range of the target error rate, the test plan requires reporting the power level nearest the target sensitivity level that still results in a passing error rate. This means that, excluding other uncertainty contributions, the actual sensitivity level ranges from the reported level to one step below the reported level. This can be represented as an asymmetric uncertainty contribution of +0/-*step size*, with a rectangular distribution. However, on average, the actual sensitivity, and thus the resulting TIS, will be one-half step below the reported value. The asymmetric uncertainty can typically be converted to a symmetrical uncertainty by applying an offset to the corresponding measurement value and dividing the total range of the expanded uncertainty by two. However, there are other minor uncertainty contributions related to the stability of the digital error rate measurement that this uncertainty contribution is assumed to encompass. The intention of the TIS test is to report a TIS value that has a high probability of being at or above the target sensitivity level. Therefore, for the purposes of this test plan, this uncertainty contribution is assumed to be symmetrical about the TIS result with a fixed uncertainty contribution of ± one-half of the step size.

For a 0.5 dB step size, a fixed uncertainty contribution of ±0.25 dB with a rectangular distribution (standard uncertainty contribution of 0.144 dB) should be reported for the step size uncertainty.

G.12 Coarse Sampling Grid in TIS Measurements

The sampling grid for TIS measurements is 30 degree steps in both θ– and ϕ-axes. The uncertainty arises from an assessment of how different the results for this spacing would be from an infinitely small sampling grid. It is possible to argue that, since all test houses are required to measure at the same 30 degree grid points using the same coordinate axes, all results would have the same value of uncertainty. However, this is not an adequate assessment since some carriers will be basing acceptance of handsets on the assumption that the measured values are correct; we need therefore to include, as an uncertainty, the contribution of this effect.

A fixed value of 0.4 dB shall be taken and its distribution shall be assumed to be rectangular (i.e. standard uncertainty = 0.23 dB).

Note: *The 15° sampling grid used in TRP tests is assumed to produce negligible uncertainty.*

G.13 Miscellaneous Uncertainty

In this test plan, the term 'miscellaneous uncertainty' is used to encompass all the unknown, unquantifiable, etc. uncertainties associated with TRP/TIS measurements. This term includes truly random effects as well as systematic uncertainties, such as that arising from dissimilarity between the patterns of the reference antenna and the EUT.

By allowing the inclusion of systematic contributions into the Miscellaneous Uncertainty, repeated measurements are therefore disqualified as a way of enumerating its overall magnitude. As a result, the magnitude of the uncertainty has to be estimated since, at least, the systematic behavior of the pattern difference effect is unquantifiable.

In this test plan, Miscellaneous Uncertainty includes, but is not limited to, the following effects:

- Pattern difference effect
- Humidity effects
- Temperature effects (not so much on equipment or the EUT - more on the losses of cables, attenuators, etc.)
- Personnel
- Dirty connector interfaces

The contribution of this effect to the overall uncertainty budget shall be accounted for in the following way:

- A fixed value of 0.2 dB with a normal distribution (i.e. standard uncertainty = 0.1 dB) shall be taken and incorporated into every uncertainty budget

G.14 TIS Normalization Uncertainty

This uncertainty component arises when using the single point or multi-point alternate test method for TIS testing as described in Section 6.15 and Section 6.16.

Using the nomenclature of Section 6.15, test configuration A will be the protocol/error rate/ data rate for which a full TIS measurement is performed while test configuration B will be the target protocol/error rate/data rate which will be tested using the single/multi-point radiated test.

The normalization uncertainty shall be treated as follows.

1. Calculate the standard uncertainty associated with the test configuration A measurement (as used for the full TIS measurement) by dividing half of the step size by $\sqrt{3}$ and by the square root of the number of measurements at different spatial positions which are averaged.

$$u_{j\ A} = \frac{Step\ Size_A}{2\sqrt{3 * Number\ of\ Measurements}}$$

2. Calculate the standard uncertainty associated with the test configuration B measurement (a single or multi-point measurement) by dividing half of the step size by $\sqrt{3}$ and by the square root of the number of measurements at different spatial positions which are averaged.

$$u_{j\ B} = \frac{Step\ Size_B}{2\sqrt{3 * Number\ of\ Measurements}}$$

3. Combine both of the uncertainty quantities with the other uncertainty contributions by root-sum-squares.

G.15 Effect of Theta Dependent Phi Optimization on TIS

It has been proven elsewhere that the numerical effect of the theta dependent phi optimization on the resultant pattern is negligible. However, for TIS, the reduction in the number of EIS points that are averaged into the resultant TIS can have an impact on the resulting TIS value. The current uncertainty budget does not independently isolate the random error of a single EIS measurement, so for the purpose of this discussion we will assume that the average of that random error is encapsulated in the Sensitivity Search Step Size uncertainty term defined in Appendix G.11.

In general, the average of N repeat measurements containing a random uncertainty term, u_c, will reduce the corresponding random uncertainty by a factor of $1/\sqrt{N}$. Thus, reducing the number of data points for a given cut from N to M will **increase** the random uncertainty of that cut by the factor of $\sqrt{N/M}$. However, since each cut is weighted by the sin(theta) term, the corresponding error contribution from that cut in the resulting TIS is also reduced by the same amount in linear units.

Rather than attempting to account for the sin(theta) weighting of each curve, the assumption here will be that the total step size uncertainty increases by a factor of $\sqrt{N/M}$ where $N = 62$ for an evenly spaced 30 degree step TIS test, and $M = 46$ for the theta dependent phi optimized pattern. In this case, $\sqrt{N/M} = 1.16$, so that for a 0.5 dB step size, the fixed uncertainty contribution of ±0.25 dB for the step size uncertainty becomes ±0.29 dB with a rectangular distribution. Therefore a standard uncertainty contribution of 0.167 dB shall be reported for the step size uncertainty instead of 0.144 dB when the theta dependent phi optimization is used.

G.16 Linearization of RSS Measurements

This uncertainty component arises from linearizing the conducted or radiated RSS measurements. The uncertainty is defined as the maximum standard deviation of the raw conducted or radiated RSS data from the final normalized conducted or radiated RSS data.

It is the responsibility of the lab to measure the maximum standard deviation and this will need to be converted to dB, if necessary.

G.17 Uncertainty of RSS Data From EUT

This uncertainty component refers to the integrity of the data reported, or recorded, by the EUT.

- The RSS measurements reported by the EUT shall be verified by examining the variance of the data in real time to ensure that it is not skewed by an erroneous reading. This variance check shall be used to determine if a data point requires retesting.

  OR

- The RSS measurements recorded by the EUT shall be verified using a post processing variance check to ensure that the data is not skewed by an erroneous reading. This variance check shall be used to determine if a data point requires retesting.

It is the responsibility of the lab to determine the maximum variance of the data obtained from the EUT and this will need to be converted to dB, if necessary.

Note: *This uncertainty term may be combined with the Appendix G.16 uncertainty term and reported as one uncertainty term.*

G.18 Reporting Mechanism for RSS Data From EUT

When the EUT either reports, or records, the RSS data at each position on the 3-D measurement sphere, there is an uncertainty introduced by this reporting mechanism that is inherent to the EUT. This uncertainty contribution refers to the quantization error present in the RSS data reported, or recorded, by the EUT at each data point on the 3-D measurement sphere.

It is the responsibility of the lab to determine the maximum quantization error of the data obtained from the EUT and this will need to be converted to dB, if necessary. This uncertainty term shall be assumed to be rectangularly distributed, in which case the standard uncertainty shall be calculated as $\frac{\text{maximum value}}{\sqrt{3}}$.

G.19 Special Considerations for Notebook Computers

Notebook computers have certain characteristics that are significantly different from cellular phone handsets and these characteristics must be accounted for in the measurement uncertainty budget. Two important differences are:

- Size - The size of a notebook computer may be larger than the 30 cm test zone defined for handsets. The test plan allows for testing devices that have a largest single dimension of 42 cm.
- Antenna location - The location of the antenna(s) in a notebook computer will often be unknown to the test lab. Hence the antenna may be located up to 40.3 cm from the center of the quiet zone.

These two characteristics combined result in a test scenario where a small antenna is potentially moved on a radius of 40.3 cm through the test zone.

G.19.1 Measurement Distance

Notebook computers whose single largest dimension is less than or equal to 42 cm may be tested at range lengths equal to or greater than the minimum range lengths specified in Section 3.1 of the test plan.

If the single largest dimension of the notebook computer under test exceeds 30 cm, an additional measurement uncertainty contribution must be included in the measurement uncertainty budget. The additional contribution is shown in Table G-6 below. The values for the additional uncertainty contributions were determined from numerical simulations assuming the worst case scenario of a large notebook with the antenna located in the top corner of the screen.

TABLE G-6 ADDITIONAL MEASUREMENT UNCERTAINTIES FOR LARGE FORM FACTOR DEVICES

Frequency Band	Frequency Range	Measurement Distance (cm)	Additional Uncertainty Contribution Required
LTE 700 MHz (3GPP Bands 12, 17, 13, 14)	699-798 MHz	$129 \leq R < 242$	0.25 dB
Cellular (3GPP Band 5) and 3GPP Band 26	814-894 MHz	$111 \leq R < 242$	0.25 dB
GPS	1575.42 MHz	$95 \leq R < 242$	0.20 dB

TABLE G-6 ADDITIONAL MEASUREMENT UNCERTAINTIES FOR LARGE FORM FACTOR DEVICES

Frequency Band	Frequency Range	Measurement Distance (cm)	Additional Uncertainty Contribution Required
AWS-1 TX (3GPP Band 4 TX)	1710-1755 MHz	$105 \leq R < 242$	0.20 dB
PCS (3GPP Band 2) and 3GPP Band 25	1850-1995 MHz	$119 \leq R < 242$	0.20 dB
AWS-1 RX (3GPP Band 4 RX)	2110-2155 MHz	$129 \leq R < 242$	0.20 dB
3GPP Band 41	2496-2690 MHz	$161 \leq R < 242$	0.20 dB

Note: *The rationale for the additional uncertainty contributions of* Table G-6 *is the following:* R *is less than* $2D^2/\lambda$ *and* $3D$. *The MU contribution is based on worst-case simulations, only small impact on integrated measurements is foreseen.*

Note: *Please refer to* Table 3-2 *for derivation of Measurement Distance lower bound.*

G.19.2 Offset of the Phase Center of the EUT from the Axis(es) of Rotation

In many cases the location of an embedded antenna in a notebook computer will be unknown by the lab performing the tests. Hence it will be impossible to place the phase center of the EUT on the axis of rotation. The antenna radiation patterns will be affected by the change in free space dispersion as the phase center moves towards and away from the measurement antenna. The maximum effect of this phenomena is given by:

$$\Delta = 20 \log_{10}\left(\frac{d+l}{d-l}\right) \text{dB}$$

where d is the range length and l is one half of the largest single dimension of the EUT and Δ is the maximum change in the pattern level due to effect. For a range length of 120 cm and a notebook computer with a single largest dimension of 42 cm, this results in a change in received signal level of 3.07dB. However, when the individual measurement points are integrated into a value for TRP or TIS, this effect is greatly reduced. For every point on the front of the measurement sphere where the measured signal level is higher than it should be, there is a corresponding point on the rear of the measurement sphere where the signal level is lower than it should be.

The uncertainty contribution for this effect is included in the uncertainty contribution for measurement distance given in Appendix G.19.1 above and no additional uncertainty contribution is required.

G.19.3 VSWR

Notebook computers present large, flat surfaces to the measurement antenna. The material of these surfaces is undefined. Thus there is the possibility that much of the energy incident on the EUT will be reflected back to the measurement antenna. Appendix G.7.3.1 details the procedure for determining the uncertainty contribution due the change in the input impedance/ VSWR of the measurement antenna. This procedure is appropriate for any EUT and no change is required for a notebook computer.

G.19.4 Chamber Standing Wave

As described in Appendix G.19.3 above, notebook computers have the potential of setting up large standing waves between the measurement antenna and the EUT. These standing waves contribute to measurement uncertainty in much the same way as reflections from the chamber surfaces and positioning equipment. However, measurements have shown that even with a notebook computer and a short measurement distance, this effect causes a change in measured TRP of less than 0.1 dB. As a result no additional uncertainty contribution is required.

G.19.5 Phase Curvature Across the EUT

The effect of phase curvature across the EUT on the integrated measurements of TRP and TIS is very small. Although the EUT may be relatively large, the actual antenna is small, and the phase curvature across the actual antenna will be insignificant. As a result no additional uncertainty is required beyond that detailed in Appendix G.19.1 above.

G.19.6 Signal Level Ripple within the Quiet Zone

For notebook computers whose single largest dimension does not exceed 30 cm, the results of the standard ripple test measurements may be used to calculate the uncertainty contribution due to ripple.

For notebook computers whose single largest dimension exceeds 30 cm, the ripple test measurements must be repeated using offsets as described in Section 3.6 The calculation of the measurement uncertainty contribution is then performed as described in Appendix G.8.

G.20 Uncertainty due to Difference in Gain over Different Channel Bandwidths

For relative measurements of different protocols with different channel bandwidths, there may be a difference in the associated path loss.

A conservative way of assessing the uncertainty due to the difference in system path loss over the different channel bandwidths is to perform the following steps:

1. Estimate the system path loss as a function of frequency by applying an appropriate curve fit to the measured system path loss.
2. Calculate the average system path loss over each channel bandwidth.

$$\overline{PL}(a,b) = \frac{1}{b-a}\int_a^b PL(f)df$$

$\overline{PL}(a,b)$ = average path loss over the frequency interval a to b.

$PL(f)$ = path loss as a function of frequency

3. The measurement uncertainty is then the difference in average system path loss over the 2 different channel bandwidths.

For systems with path loss variation less than 3 dB over a 25 MHz band containing the channel bandwidths of interest, a fixed uncertainty contribution of 0.2 dB with a rectangular distribution (standard uncertainty of 0.115 dB) may be used.

G.21 EUT Positioning/Repositioning Uncertainty

There are a number of uncertainty contributions related to positioning or repositioning the EUT in the test environment, including near field effects related to positioning against the head and/or hand phantoms or other fixturing. Appendix G.10.5 details the steps for determining the uncertainty contribution related to near field positioning repeatability with head and hand phantoms. In addition, free-space testing and multi-step test processes such as RSS based TIS and the various alternate test methods require one or more positioning uncertainty contribution(s).

For free-space testing, the orientation of the EUT in the mounting fixture can have small effects on the overall TRP/TIS and near horizon numbers due to slight differences in alignment. In addition, any near field interactions with the dielectric support can have an effect. Repeated TRP tests of a sample device with minor mounting changes between each test can be used to estimate this effect.

For RSS and alternate methods that rely on single point normalization techniques, any difference in the position between reference and target measurements can change the relative results and produces a repositioning error that may just be the result of automated positioning. Since this is a pattern related result instead of an average result like TRP/TIS, the variation at the peak of the EUT pattern can be used to estimate this quantity. For the purposes of this contribution, interpolated TRP pattern data can be used to determine the maximum change expected due to a one-degree positioning change. This term shall be treated as a rectangular distribution.

In cases where the EUT is repositioned relative to the head/hand/fixture (e.g., due to lost call or battery change) between steps of a relative test, the appropriate positioning uncertainty shall be applied a second time as a repositioning uncertainty.

G.22 Test System Frequency Flatness Uncertainty

For wireless technologies with channel bandwidths more than 2 MHz, there is a likelihood that the test system used will not have a flat frequency response across the entire channel. While the range calibration corrects for any variation of frequency response as a function of the center frequency of the channel, the broadband power measured from one of these technologies will be a function of the entire channel bandwidth as opposed to just the center frequency. Thus, any deviation of the rest of the channel from the signal level at the center frequency will result in an error in the measured result. For average power measurements, the error may be measured and corrected for, thereby minimizing the impact on measurement uncertainty. Where error correction is not possible or practical, the lab shall account for the total measurement uncertainty due to channel frequency response variation. Even with average channel power error correction, there may still be small uncertainty contributions related to frequency interpolation error that may need to be addressed. In addition, sensitivity measurement results are not necessarily a linear function of average channel power, resulting in some additional measurement uncertainty bias.

To determine the appropriate error correction or measurement uncertainty for total channel power, use range calibration curves measured with a frequency resolution sufficient to produce smoothly varying frequency response curves with no evidence of higher order contributions. While resolutions on the order of 1 MHz are likely to be sufficient for most systems, resolutions closer to the channel or RB allocation resolution (e.g. ~200 kHz) are recommended to minimize interpolation error. After applying the reference antenna gain, convert the path loss data to linear power units then perform a running average across the band, averaging the data points across the corresponding channel bandwidth. The following equation describes the expected error contribution that this uncertainty must address:

EQUATION G.33

$$\varepsilon_j = 10\log\left(\frac{\sum_{k=j-N/2}^{j+N/2} PL_k}{(N+1)PL_j}\right)$$

where ε_j is the expected relative error in the average power result for a given channel in dB, PL_j, is the linear path loss at the center frequency of the given channel, PL_k, is the linear path loss at each frequency point across the corresponding channel, and N is the number of frequency steps across a given channel bandwidth. Note that $N + 1$ points are actually averaged together from one edge of the channel to the other. This error may be removed directly at each frequency, f_j, by using the average path loss across the channel as the range loss correction rather than the path loss at the center frequency:

EQUATION G.34

$$\overline{PL}_j(dB) = 10\log\left(\frac{1}{N+1}\sum_{k=j-N/2}^{j+N/2} PL_k\right)$$

If not correcting for the average power error, the maximum deviation across all of the possible channels in a band shall be used to estimate the required channel flatness uncertainty contribution using a rectangular distribution so that $u_i = a_i / \sqrt{3}$, where a_i is given by $a_i = \max\left(\left|\varepsilon_j\right|\right)$.

Assuming the frequency response is not under-sampled, the worst case error due to interpolation may be estimated as the maximum change in path loss magnitude between any two points within a band.

EQUATION G.35

$$\varepsilon_{interpolation}(dB) = \max\left(\left|PL_{j+1}(dB) - PL_j(dB)\right|\right)$$

This error shall be converted to an appropriate measurement uncertainty contribution using a rectangular distribution so that $u_i = \varepsilon_{interpolation} / \sqrt{3}$.

Note that while sensitivity results may be more directly affected by the frequency dependent behavior of variations in channel flatness, such that the sensitivity result would be biased to a higher power level (worse sensitivity result), for the purposes of this test plan, this effect is deemed to be encompassed by the sensitivity search step size contribution in Appendix G.11.

Appendix H Tissue Equivalent Dielectric Property Measurements (Normative)

This appendix describes the measurement of the dielectric properties of tissue-equivalent material. The head phantom is either filled with tissue simulating liquid or a solid or gel-like material. The hand is usually based on a carbon-filled silicone rubber material. This appendix intends to provide sufficient details to enable users to perform accurate measurement of the dielectric properties of liquid or solid materials including the corresponding uncertainties.

Besides relative permittivity and conductivity, the carbon-loaded polymer matrix materials used for making hand phantoms have other properties which must be carefully controlled, most notably DC resistance and stiffness. In carbon-loaded materials with increasing carbon concentrations, a point is reached, the percolation point, at which the particles are no longer completely isolated and the DC resistance of the entire macroscopic sample drops suddenly. Measurements of permittivity and conductivity on materials around this carbon concentration are believed to be subject to systematic instabilities, and need careful procedures.

An additional issue is that in solids with suspended particles, natural surfaces represent a unique plane, and may contain a much-reduced particle loading compared to any other sectional plane through the solid, where particles will intersect the plane. Cutting such material may result in release of a carbon film that may also strongly affect the measurements.

The open-ended coaxial probe (OCP) technique has demonstrated an acceptable degree of consistency between labs, even around the percolation point. Moreover, the published target dielectric properties for hand materials were derived from open-ended probe measurements on a sample of human hands. The OCP method shall be used for all surface dielectric property measurements. If the TEM transmission line technique is used for bulk property measurements, users shall show that their technique agrees with results obtained using the open-ended coaxial probe technique.

General procedures to evaluate dielectric parameter measurement uncertainties are provided in Appendix G.16.

Note: *Due to the inability to assess the measurement uncertainty of the solid tissue equivalent material for the head phantom, the use of solid head phantoms is not allowed in the test plan at this time.*

H.1 Measurement Techniques

This section intends to provide sufficient detail and a test methodology based on the OCP method to enable users to perform dielectric property measurements of hand and head phantom materials. The dielectric parameters to be determined are the complex relative permittivity $\varepsilon_r = \varepsilon_r' - j\sigma/\omega\varepsilon_0$ of the material.

It is recommended that with each delivered hand, manufacturers will provide two test samples of the material made from the same mix as the hand, one to be kept by the user, and the other by the manufacturer. The test samples shall be of the correct dimensions, or cast in a TEM line, to lend themselves to a quick check using one of the methods below.

H.2 Open-ended Coaxial Probe (OCP) Method

Gabriel has shown that data obtained on various carbon loaded materials using the open-ended coaxial measurement method encompass the required property range of proposed dielectric target values [4] [14].

One additional property of the hand materials that must be considered is their rubbery nature, which makes the surfaces readily compressible. The degree to which the coaxial sensor is pressed into the surface of the test sample has a significant effect on the results obtained. Sensors with a nominal diameter of at least 7 mm are to be preferred over smaller ones in this respect.

A cylindrical sample-under-test, such as can be provided by molding inside a 20 ml plastic syringe, alleviates the concern that might exist with a flat block that probe pressure causes the material directly under the probe tip to bow away from contact.

To obtain measurement consistency, the sensor can be supported on a framework that allows measurement at either a fixed contact pressure or at a fixed sensor displacement. In both cases, as contact is increased from a light touch, the dielectric results change, but above a certain critical pressure/penetration, stable results are obtained. Measurements shall be made in this condition. Investigations indicate that a pressure of around 500 kPa is necessary for this condition to be met, or a displacement of 3 mm. 500 kPa is equivalent to a load of 2 kg on a nominal 7 mm diameter probe.

Measurement at a fixed sensor displacement offers a considerable advantage over the fixed pressure technique by providing, at the same time, a simple measurement of the elastic modulus of the material-under-test. It is the elastic modulus which determines the ultimate stiffness of the molded hand. The NIST website at the link below shows how the deformation of a cylinder of material compressed between two plane surfaces relates to its elastic modulus.

http://emtoolbox.nist.gov/elastic/case10.asp

If, in this setup, the top plane surface is taken as the flat tip of the open-ended probe, and the lower plane is a load cell, the applied load read from the load cell for a fixed deformation relates directly to the material's elastic modulus.

Figure H-1 shows the physical set-up in the case of fixed displacement, and Figure H-2 the equivalent set up for fixed pressure.

FIGURE H-1 SETUP FOR FIXED DISPLACEMENT MEASUREMENT

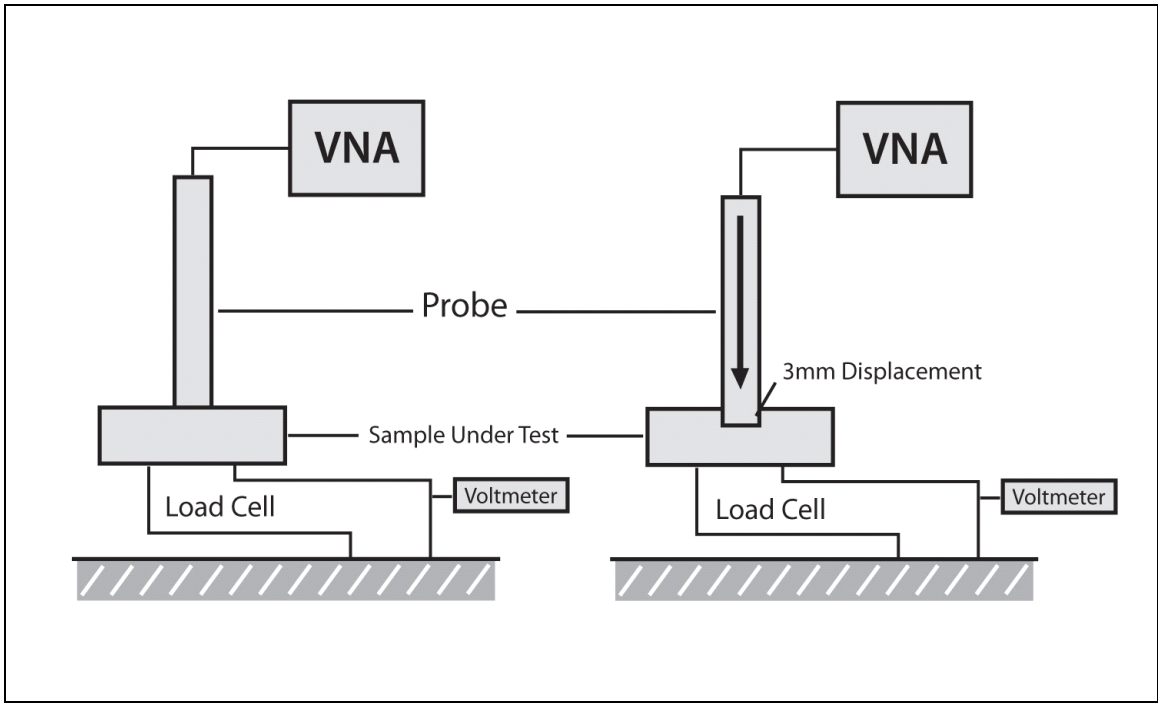

FIGURE H-2 SETUP FOR FIXED PRESSURE MEASUREMENT

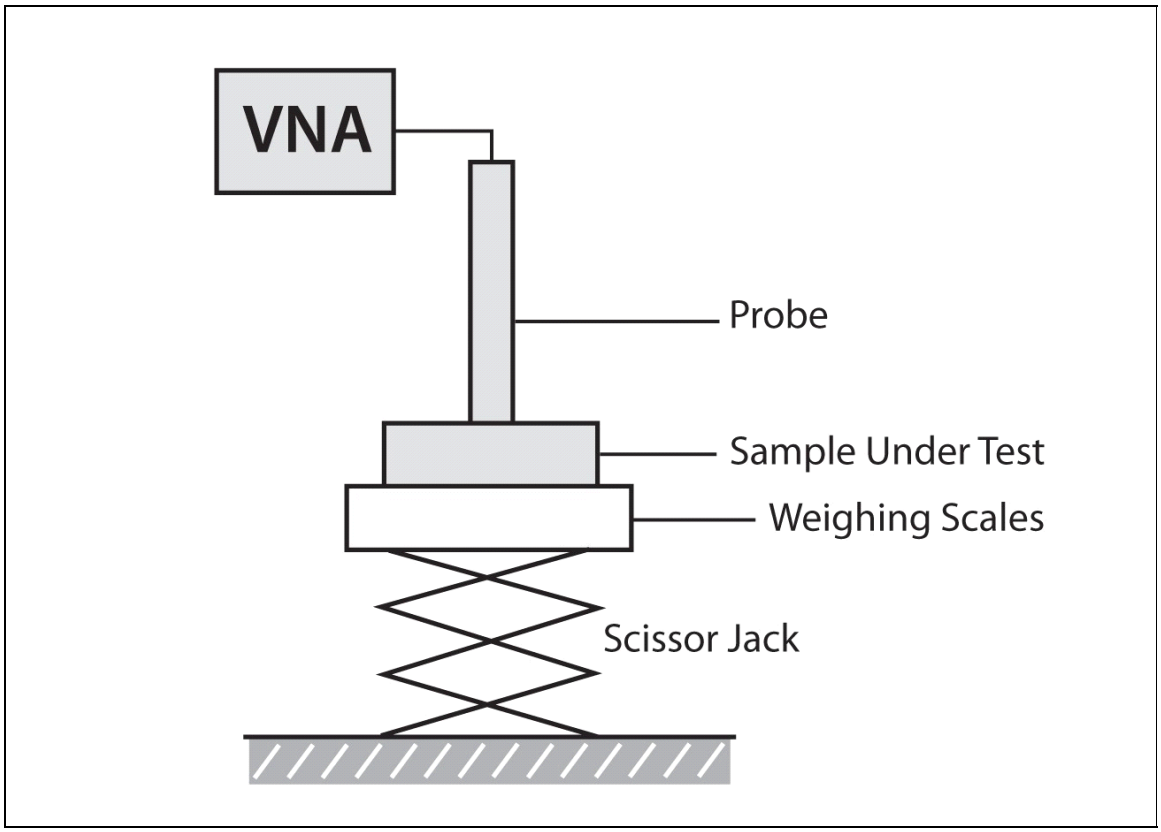

Measurements are made by placing the probe in contact with the sample and measuring the admittance or reflection coefficient with respect to the open-circuit end, using a network analyzer or equivalent instrumentation [13]. To reduce measurement uncertainty, it is recommended that the measurement be repeated at least 10 times at different positions on the test sample, to minimize bias from abnormal readings caused by particulates of the same scale size as the probe dimension.

Test procedures should specify the network analyzer calibration and settings for the required frequency range. The application software should interpret the measured data to yield the dielectric properties of the sample as a function of frequency, together with an estimate of the standard deviation. To use this technique, a probe and a software package for the network analyzer has to be developed or obtained from a commercial source. The methodology should specify the probe size and applicable frequency range. [15] [16].

H.2.1 OCP Equipment Set-up

The equipment consists of a probe connected to one port of a vector network analyzer. The probe is an open-ended coaxial line, as shown in Figure H-3. Cylindrical coordinates (ρ, ϕ, z) are used where ρ is the radial distance from the axis, ϕ is the angular displacement around the axis, z is the displacement along the axis, a is the inner conductor radius, and b is the outer conductor inner radius.

Probes having the internal diameter of the outer conductor, $2b$, at least 5.5 mm are to be preferred to smaller ones since preliminary findings suggest that a degree of volume averaging occurs in the material under the probe tip. A flange may be included to better represent the infinite ground-plane assumption used in admittance calculations.

The network analyzer is configured to measure the magnitude and phase of the admittance. A one-port reflection calibration is performed at the plane of the probe by placing liquids for which the reflection coefficient can be calculated in contact with the probe. Three standards are needed for the calibration, typically a short circuit, air, and de-ionized water at a well-defined temperature (other reference liquids such as methanol or ethanol may be used for calibration).

Probes with or without flanges may be used. However, care should be taken if using flanged OCPs since “flange resonances” can cause large measurement errors when the diameter of the flange is approximately equal to half a wavelength in the dielectric medium. Such effects are most pronounced for high-permittivity liquids that have a loss tangent less than approximately 0.25 (at mobile phone frequencies these include water, methanol, and dimethyl sulphoxide). Therefore, it is strongly recommended that calibration is performed in a liquid having a high loss tangent, (e.g., ethanol) unless the sensor is immersed in a suitably large volume (e.g. 10 liters) of low loss tangent fluid.

FIGURE H-3 OPEN-ENDED COAXIAL PROBE WITH INNER AND OUTER RADII A AND B, RESPECTIVELY

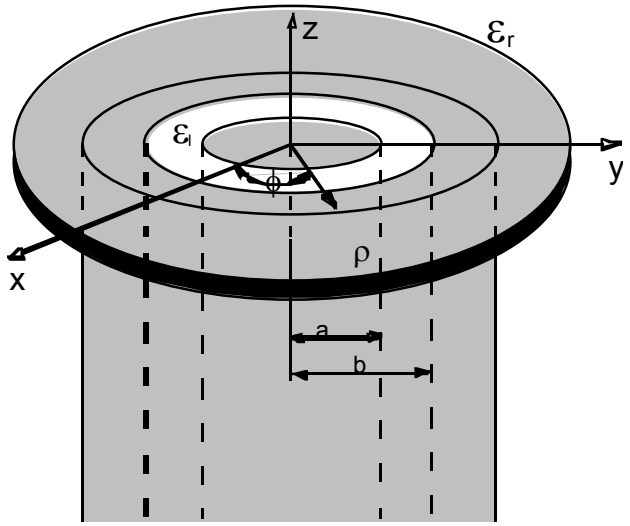

a is the inner conductor radius

b is the outer conductor inner radius

ε_r is the absolute permittivity of the medium outside the coaxial line

ε_i is the absolute permittivity of the medium inside the coaxial line

z is the displacement along the axis

ρ is the radial distance from the axis

ϕ is the angular displacement around the z-axis

(x, y, z) are the Cartesian coordinates

The calibration is a key part of the measurement procedure, and it is therefore important to ensure that it has been performed correctly. It can be checked by re-measuring the short circuit to ensure that a reflection coefficient of Γ = -1.0 (linear units) is obtained consistently or by a reference liquid with well known properties. The accuracy of the short-circuit measurement should be verified for each calibration at a number of frequencies. A short circuit can be achieved by gently pressing a piece of aluminum foil against the open end. For best electrical contact, the probe end should be flat and free of oxidation. Larger sensors without flanges generally have better foil short-circuit repeatability.

Measurement devices are commercially available.

H.2.2 Measurement Procedure

1. Configure and calibrate the network analyzer. Measurement uncertainty in the phase of the admittance measured by the OCP can be reduced by ensuring the calibration reference plane is located at the probe tip. This can be done by performing a full 12-term calibration with the probe replaced by an equivalent length of identical transmission line terminated at both ends (see Figure H-4).

FIGURE H-4 CALIBRATION OF VNA USING A DUMMY PROBE WHOSE ELECTRICAL LENGTH IS THE SAME AS THE ACTUAL OCP

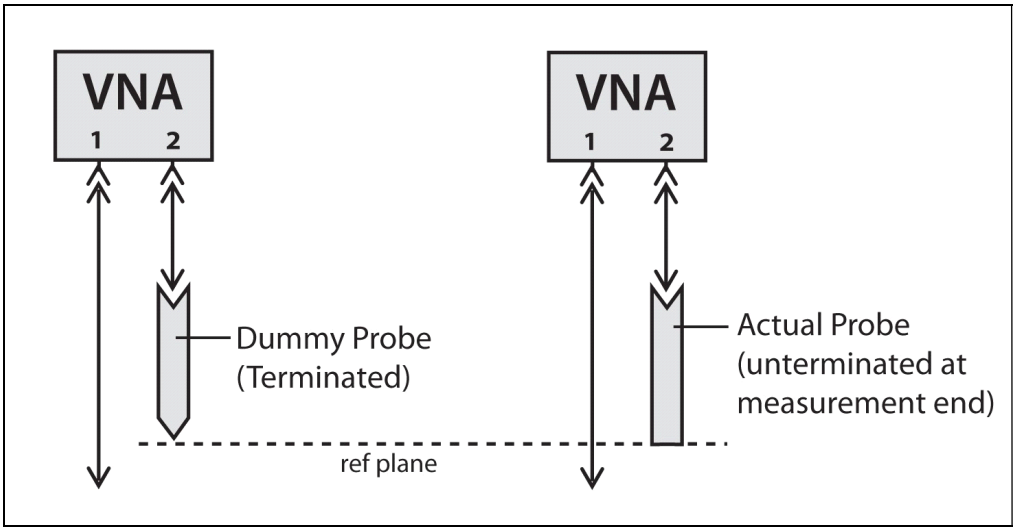

2. Replace the OCP and calibrate against an open circuit, a short circuit, and a fluid whose electrical properties are known at a reference temperature.
3. Place the sample in the measurement fixture, and bring the probe squarely into contact with the surface.
4. Depending on the measurement technique chosen, either depress the probe by a fixed distance, say 3 mm, and measure the change in reading on the load cell, or place the sample on weighing scales and offer the sample up to the probe using a scissor jack until a set change in reading is obtained on the scales.
5. Measure the complex admittance with respect to the probe aperture.
6. Compute the complex relative permittivity $\varepsilon_r = \varepsilon_r' - j\sigma/\omega\varepsilon_0$, for example from the equation [14].

$$Y = \frac{j2\omega\varepsilon_r\varepsilon_0}{\left[\ln(b/a)\right]^2}\int_a^b\int_a^b\int_0^\pi \cos\phi' \frac{\exp\left[-j\omega(\mu_0\varepsilon_r\varepsilon_0)^{1/2}r\right]}{r} d\phi' d\rho' d\rho$$

This expression can be computed numerically, or expanded into a series and simplified. The equation is first solved for the sample wave number k then the sample complex permittivity, using Newton-Raphson or other iterative approximations. Other numerical approaches may be used provided the application software has been thoroughly tested and checked via measurements of reference liquids. Commercially available open-ended coaxial probe kits typically use versions of this theory and method.

H.3 TEM Transmission Line Method

As outlined in the introduction, the TEM transmission line method shall only be applied if it has been shown to be equivalent to the open coaxial probe method for the carbon loaded dielectric materials. This documentation shall be made available. The TEM transmission line method shall not be used for dielectric measurements of the surface of the hand phantoms.

TEM transmission line method is based on the measurement of the complex transmission coefficient of a TEM-mode coaxial transmission line filled with the test sample. The measurement of transmission coefficient is performed using a vector network analyzer to determine magnitude and phase of the scattering coefficient S_{21}. The measured data is then used to calculate the complex permittivity as a function of frequency.

H.3.1 TEM Equipment Set-up

The measuring set-up is shown in Figure H-5. It consists of a vector network analyzer, a temperature sensor and a sample holder. The sample holder is a coaxial transmission line using the TEM dominant mode.

FIGURE H-5 TEM TRANSMISSION LINE DIELECTRIC MEASUREMENT METHOD SETUP

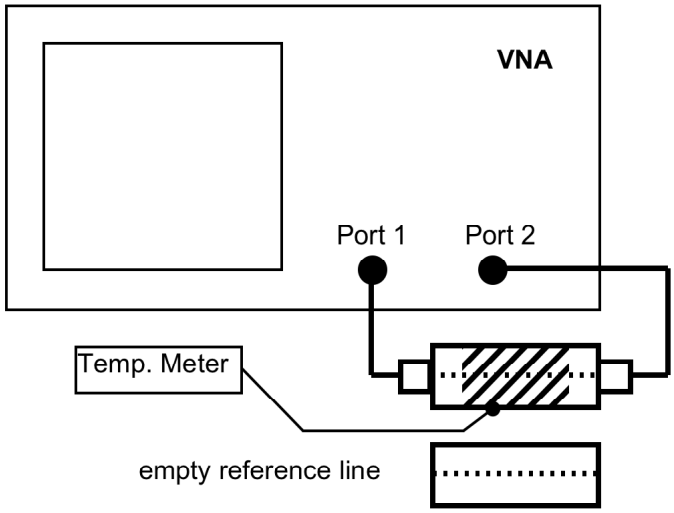

As shown in Figure H-6 and Figure H-7, the set-up can be implemented using either a cylindrical (coaxial) or a planar (strip-line) geometry, as long as the empty cell is of 50 ohm impedance. The same equations apply for both. The strip-line implementation described by Toropainen has been widely used for liquids measurements [17]. Different lengths of the sensor can be selected for optimum measurements depending upon the lossiness of the materials. A line of between 80-160 mm is suitable for measurement of hand materials.

FIGURE H-6 GEOMETRY OF THE SAMPLE HOLDER (DIELECTRIC TEST CELL, DIMENSIONS IN MM)

INJECTED SAMPLE MATERIAL (2), (B) OUTER CONDUCTOR (1) AND (C) INNER CONDUCTOR (3) OF THE COAXIAL LINE.

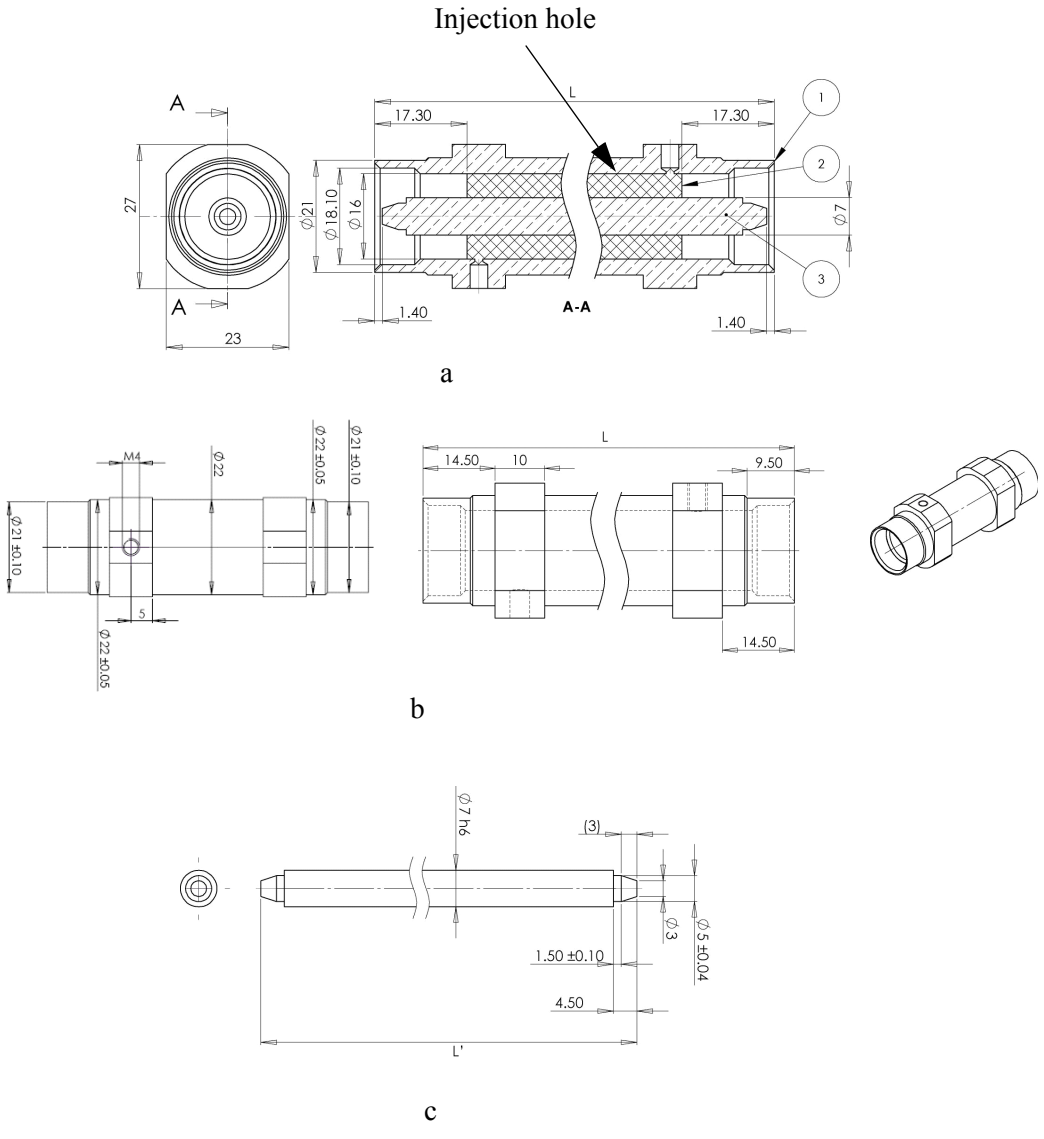

FIGURE H-7 CONSTRUCTION DIAGRAM OF STRIP-LINE TEM SENSOR (ALL DIMENSIONS IN MM)

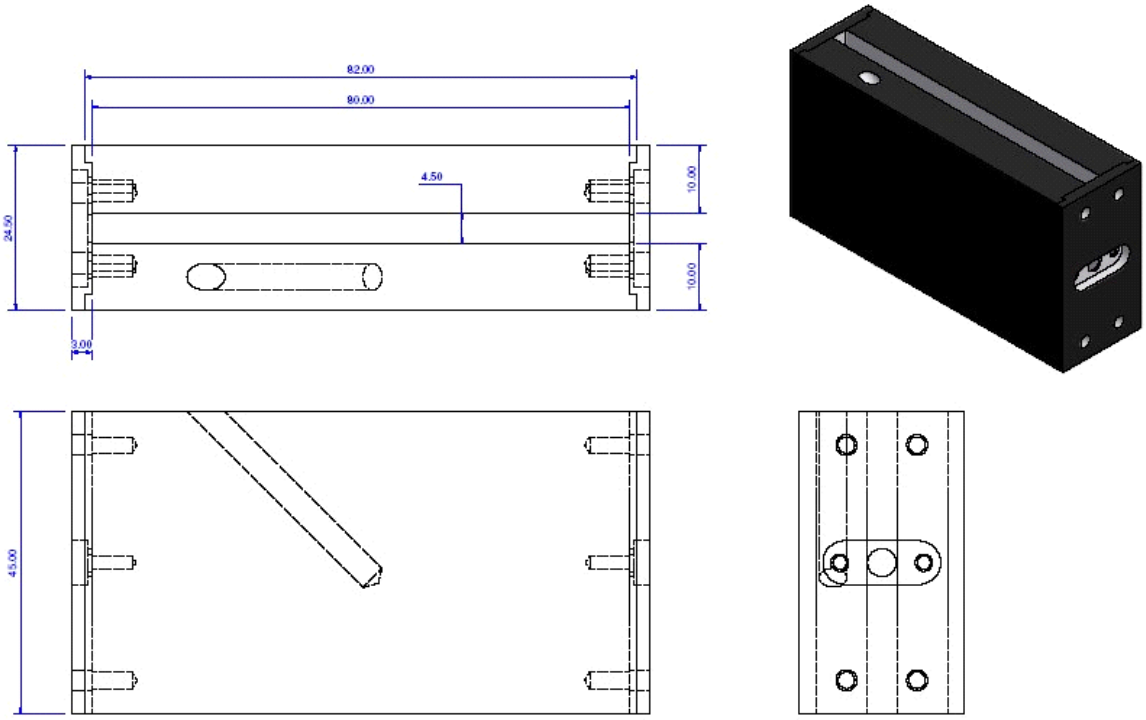

The solution to the equations in Appendix H.3.2 is not unique and it is possible to obtain the wrong solution if a narrow measurement frequency range is used with materials of unknown composition. Use of a wide frequency range for measurement ensures selection of the appropriate solution.

Neither the strip-line sensor, nor the coaxial implementation proposed in Figure H-6 and Figure H-7 are particularly convenient for solids material measurements if the cell has to be dismantled to remove the solid sample after use.

The cross section of the sample and the holder is constant. The dimensions are optimized for required frequency range to minimize the effects of higher order modes, have a sufficiently large sample and allow usage of industrially available connectors. The sample length is selected for not exceeding the dynamic range of the analyzer at the highest frequency (100 mm are equivalent to 60 dB attenuation at 3 GHz). The sample to be measured is injected into the cell in vacuumed condition to avoid air bubbles and air gaps. The process of filling and consecutive hardening is equivalent to the production process of the hand phantom. In case of shrinking of the material during the hardening process, the length difference has to be considered in the evaluation. Gaps in the radial direction must be avoided.

H.3.2 Measurement Procedure

1. Configure and calibrate the network analyzer such that the reference planes coincide with the sample holder ports.
2. Record the magnitude and phase of S_{21}^{0} of the empty reference sample holder at the desired frequencies.
3. Connect the holder with the sample material mounted and repeat the measurement to obtain the transmission coefficient with the sample S_{21}^{S} .
4. Calculate the complex permittivity of the sample from the magnitude and phase of S_{21}^{S} / S_{21}^{0} by a solution of the equations.

$$\frac{S_{21}^{S}}{S_{21}^{0}} = \frac{\left(1-\Gamma^{2}\right)\exp\left[-j(k-k_{0})d\right]}{1-\Gamma^{2}\exp\left(-j2kd\right)},$$

$$\Gamma = \frac{1-\sqrt{\varepsilon_{r}}}{1+\sqrt{\varepsilon_{r}}},$$

$$k = \frac{2\pi f}{c_{0}}\sqrt{\varepsilon_{r}}, k_{0} = \frac{2\pi f}{c_{0}}$$

where:

Γ is the reflection coefficient at either end of the TEM line (air/material interface);

k is the wave number in the sample;

k_0 is the free-space wave number;

d is the length of the sample in the TEM line;

f is the frequency;

c_0 is the free-space speed of light;

$\varepsilon_r = \varepsilon_r' - j\sigma/\omega\varepsilon_0$ is the complex relative permittivity of the sample.

The measurement accuracy can be increased by considering the influence of the triple pass wave in the well-known length of the sample. Considerations regarding this method and related restrictions are discussed in the following reference [18].

Appendix I Assessment of Uncertainty Values using Simulation Tools (Normative)

I.1 Introduction

Uncertainty assessments are always relative evaluations and therefore well suited for numerical simulation tools which provide the most appropriate technique to compare different configurations. It can be guaranteed that the relative accuracy is significantly better than 0.1 dB. The simulation tools can be used for Type B and Type A evaluations. Type A evaluations require sufficient computational resources and scripting of the input file to satisfy the required random modifications. Type B evaluations are straightforward and consider only the average and both maximum bounds of the tolerance.

The purpose of this appendix is to describe the concept of uncertainty assessment using simulation tools including the validation of the tool and numerical evaluation procedure.

I.2 Requirements for the Simulation Software

The basic requirements of the simulation software must be the following:

- Import of mobile phone CAD data (typically, >500 parts) as well as head/hand phantoms and fixture data
- Accurate simulation of mobile phones with homogenous head and hand phantoms including effect on impedance, efficiency, and performance
- Position of mobile phone and phantoms with high precision
- Evaluation of end points specified in Appendix G
- Scripting abilities

I.3 Simulation Software Validation

The simulation software should be validated by the manufacturers according to the following:

- Checking the correct evaluation of the end points specified in Appendix G of dipoles
- Checking the correct evaluation of the end points specified in Appendix G of dipoles with different locations of the absorbing boundary conditions (ABC) if applicable
- Computation of the benchmark examples listed in IEEE P1528.1™/D1.0 [19] and IEEE P1528.4™/D1.0 [20] following the procedure defined in the same documents
- Computation of the benchmark examples of SAM phantom, as defined by Beard et. al [21], using different meshing densities

I.4 Phone Validation

The uncertainty evaluation requires different mobile phone models (see Appendix G).

- The phone models including effects of back scattering on the impedance shall be validated by SAR distribution or near-field free space comparison (distance to the surface of the phone less than 20 mm) for different distances from the phone, e.g., 5 mm, and 10 mm. If the deviation of all distances with respect to the peak and pattern (gamma method comparison) is less than 15%, the phone can be considered validated.
- The phone models shall be validated by TRP and efficiency comparisons.

I.5 Computation of the Uncertainty for Type B Evaluation

Type B evaluations are straightforward. Only the average and both maximum bounds of the tolerance will be considered, whereas, the rectangular distribution is assumed. These cases are computed with the previously validated code and for different phone models if required. The difference in the end points specified in Appendix G compared to the standard case will be compared and the maximum will be used for the uncertainty budget.

I.6 Computation of the Uncertainty for Type A Evaluation

Although Type A evaluations require more powerful tools than Type B evaluations, they are more reliable. A parameter distribution is experimentally determined or predicted. These parameters are then scripted in the software tool and the magnitude of the parameters is

randomly assigned and compliant with the determined distribution. The difference in the end points specified in Appendix G is evaluated for each simulation case in which an appropriate statistical analysis shall be performed.

I.7 Numerical Evaluation of Head and Hand Phantom Fixtures Uncertainty

The numerical evaluation compares the differences between the end points specified in Appendix G with and without fixtures and mounting structures. Type A and B evaluations shall be applied, the highest of which shall be used.

The evaluation procedure requires the existence of CAD model files of the different phone models, head and hand phantoms, and their fixtures. A proposed and recommended procedure for importing and preprocessing the phone model can be found in IEEE P1528.3™/D2.0 [22].

1. Import antenna and PCB of the handset model into simulation software.
2. Model source by implementing a feed gap or other source model.
3. Import the remaining parts in order of importance and set material parameters.
4. Validate the phone in free-space by comparing near-field according to Appendix I.5.
5. Import models of the head and hand phantoms into the same model space and set material parameters according to Appendix C.
6. Position the phone with respect to the head and hand phantoms according to the procedure defined in Appendix A.
7. Import models of head and hand phantom fixtures and mounting structures into the same model space.
8. Position them to operate as fixture and/or mounting structures and set material parameters.
9. Perform the initial simulation for each frequency band and evaluate the end points specified in Appendix G.
10. Without changing any simulation settings and discretizations, repeat step 9 without fixtures and mounting structures.

I.8 Numerical Evaluation of Phone Positioning Uncertainty

Numerical evaluation of phone positioning uncertainty is a Type A uncertainty analysis which is conducted using high-end simulation tools supporting scripting of mechanical positioning.

The first step of the procedure, as described in Appendix G.10.5.1, is conducted without measurement. A mechanical position matrix is derived for which the analysis is conducted following the procedures described in Appendix I.

1. Import antenna and PCB of the handset model into simulation software.

2. Model source by implementing a feed gap or other source model.
3. Import the remaining parts in order of importance and set material parameters.
4. Validate the phone in free-space by comparing near-field according to Appendix I.5.
5. Import models of the head and hand phantoms into the same model space and set material parameters according to Appendix C.
6. Position the phone with respect to the head and hand phantoms according to the procedure defined in Appendix A.
7. Import models of head and hand phantom fixtures and mounting structures into the same model space.
8. Position them to operate as fixture and/or mounting structures and set material parameters.
9. Perform the initial simulation for each frequency band and evaluate the end points specified in Appendix G.
10. Using scripting features of simulation software, generate different simulation projects according to the mechanical position matrix. Each project has to use the same simulation settings and discretization of the device as in the initial simulation.
11. Repeat Step 1 to Step 10 for each phone model.
12. Performance of the statistical evaluation of the simulated data per device for the end points specified in Appendix G. The largest standard deviation shall be used for the uncertainty budget with a degree of freedom equal to M/n-1, where M is the total number of simulations, and n is the number of EUTs used in the simulations. If there are a sufficient number of simulations, then a more sophisticated ANOVA analysis can be performed.

I.9 Numerical Evaluation of Head and Hand Phantom Shape Uncertainty

The head phantom shape uncertainty is the effect of the production tolerances of the inner and outer surfaces of the shell. The hand phantom shape uncertainty results from the production tolerance of the outer surface of the phantom. If the tolerance in both case is not within 2% from the specified dimensions in the CAD files, then a numerical evaluation must be conducted to determine the uncertainty.

The numerical evaluation procedure requires the existence of CAD model files of the original of head/hand phantoms and the phantoms with shapes deviated from the original. Following the proposed and recommended procedure in IEEE P1528.1™/D1.0 [19], IEEE P1528.4™/D1.0 [20] and IEEE P1528.3™/D2.0 [22], the phone models are initially simulated with the original head and hand phantoms and the end points specified in Appendix G are evaluated for each frequency band. The simulations are then repeated after the original head and hand models are replaced with the deviated models. The end points specified in Appendix G

obtained in both cases are compared to determine the uncertainty value due to the tolerance of phantom shape.

I.10 Numerical Evaluation of Head Phantom Support Material Uncertainty

The head phantom support material uncertainty results from the supporting dielectric structures of the head phantom. If the effect of the supporting material on the end points specified in Appendix G cannot be neglected then a numerical evaluation must be conducted.

The numerical evaluation compares the differences between the end points specified in Appendix G with and without head phantom support/mounting structures. Following the proposed and recommended procedure in IEEE P1528.1™/D1.0 [19], IEEE P1528.4™/D1.0 [20] and IEEE P1528.3™/D2.0 [22], the phone models are initially simulated with the original head phantom without supporting material and the end points specified in Appendix G are evaluated for each frequency band. The simulations are then repeated after the supporting/ mounting structure is added to the head phantom. The end points specified in Appendix G obtained in both cases are compared to determine the uncertainty value due to the head phantom supporting/mounting structure.

Appendix J Lab Repeatability Evaluation (Normative)

The laboratory repeatability evaluation is a check of the repeatability of the OTA evaluations; it is recommended that the evaluation be conducted once per year or more frequently, depending on any changes in the staff performing the OTA test.

The repeatability evaluation can be conducted within a short period or distributed over the year. It shall be conducted for the following endpoints:

- Total Radiated Power (TRP)
- Total Isotropic Sensitivity (TIS)
- Power radiated over ±45 degrees near the Horizon (NHPRP ±45)
- Power radiated over ±30 degrees near the Horizon (NHPRP ±30)

A Type A uncertainty analysis consists of the following steps and shall be repeated for each person who may perform tests (T_x) using at least two different EUTs (D_x). The EUTs can be reference phones which have been verified to be stable.

All the phones used in the study shall be characterized and documented.

1. Shut down all equipment and unmount head and phone.
2. Set up and verify the system is functioning properly as usually performed before a test
3. Select the measurement order of devices D_x (D_1 … D_n) operating at test frequencies f_x (f_1 - f_i) and measured by the technicians T_x (T_1 … T_m), where n shall be larger than 3 and equally divided between monoblock and fold phones with at least one antenna at the bottom of the device.
4. Test person T_x mount device D_x in the hand phantom and at the head phantom.
5. Determine TRP/NHPRP/UHRP/PGRP for the selected frequencies.
6. The same test person T_x mounts Device D_{x+1} in the hand and at the head and repeat Steps 3 and 4.
7. Change technicians and repeat Steps 1 and 5 until all technicians have positioned each phone at least once and at least 10 evaluations have been performed for each device, i.e., number of measurements M shall be equal to or larger than 40 times the number of test frequencies
8. Performance of the statistical evaluation of the measured data per device for TRP, NHPRP ±30º, NHPRP ±45º. The largest standard deviation shall be used for the uncertainty budget with a degree of freedom equal to M/n-1. If there are a sufficient number of measurements then a more sophisticated ANOVA analysis can be performed.

Determine the distribution of the results and the standard deviations for all assessments. The distribution should be close to Gaussian and none of standard deviation should exceed the uncertainty of the laboratory repeatability as determined according to Section 7.

Appendix K Intermediate Channel Lists (Normative)

This appendix describes the exact intermediate channels that shall be tested for relative sensitivity for each air interface.

	The green cells represent the low, middle and high channels that are fully tested for TIS.
	The yellow cells represent the lower 25% of the intermediate channels.
	The white cells represent the middle 50% of the intermediate channels.
	The orange cells represent the upper 25% of the intermediate channels.

K.1 CDMA Intermediate Channel List

This intermediate channel list shall be used for CDMA, CDMA 1xEV-DO and CDMA 1xRTT.

TABLE K-1 CDMA 800 INTERMEDIATE CHANNEL LIST

CDMA 800	
Channel	**Frequency (MHz)**
1013	869.70
1023	870.00
16	870.48
32	870.96
48	871.44
64	871.92
80	872.40
96	872.88
112	873.36
128	873.84
144	874.32
160	874.80
176	875.28
192	875.76
208	876.24

TABLE K-1 CDMA 800 INTERMEDIATE CHANNEL LIST

CDMA 800	
Channel	**Frequency (MHz)**
224	876.72
240	877.20
256	877.68
272	878.16
288	878.64
304	879.12
311	879.33
356	880.68
368	881.04
384	881.52
400	882.00
416	882.48
432	882.96
448	883.44
464	883.92
480	884.40
496	884.88
512	885.36
528	885.84
544	886.32
560	886.80
576	887.28
592	887.76
608	888.24
624	888.72
640	889.20
644	889.32
689	890.67
694	890.82
739	892.17
752	892.56
768	893.04
777	893.31

TABLE K-2 CDMA 1900 INTERMEDIATE CHANNEL LIST

CDMA 1900	
Channel	**Frequency (MHz)**
25	1931.25
30	1931.50
40	1932.00
50	1932.50
60	1933.00
70	1933.50
80	1934.00
90	1934.50
100	1935.00
110	1935.50
120	1936.00
130	1936.50
140	1937.00
150	1937.50
160	1938.00
170	1938.50
180	1939.00
190	1939.50
200	1940.00
210	1940.50
220	1941.00
230	1941.50
240	1942.00
250	1942.50
260	1943.00
270	1943.50
280	1944.00
290	1944.50
300	1945.00
310	1945.50
320	1946.00
330	1946.50
340	1947.00
350	1947.50
360	1948.00
370	1948.50

TABLE K-2 CDMA 1900 INTERMEDIATE CHANNEL LIST

CDMA 1900	
Channel	**Frequency (MHz)**
380	1949.00
390	1949.50
400	1950.00
410	1950.50
420	1951.00
430	1951.50
440	1952.00
450	1952.50
460	1953.00
470	1953.50
480	1954.00
490	1954.50
500	1955.00
510	1955.50
520	1956.00
530	1956.50
540	1957.00
550	1957.50
560	1958.00
570	1958.50
580	1959.00
590	1959.50
600	1960.00
610	1960.50
620	1961.00
630	1961.50
640	1962.00
650	1962.50
660	1963.00
670	1963.50
680	1964.00
690	1964.50
700	1965.00
710	1965.50
720	1966.00
730	1966.50
740	1967.00
750	1967.50

TABLE K-2 CDMA 1900 INTERMEDIATE CHANNEL LIST

CDMA 1900	
Channel	**Frequency (MHz)**
760	1968.00
770	1968.50
780	1969.00
790	1969.50
800	1970.00
810	1970.50
820	1971.00
830	1971.50
840	1972.00
850	1972.50
860	1973.00
870	1973.50
880	1974.00
890	1974.50
900	1975.00
910	1975.50
920	1976.00
930	1976.50
940	1977.00
950	1977.50
960	1978.00
970	1978.50
980	1979.00
990	1979.50
1000	1980.00
1010	1980.50
1020	1981.00
1030	1981.50
1040	1982.00
1050	1982.50
1060	1983.00
1070	1983.50
1080	1984.00
1090	1984.50
1100	1985.00
1110	1985.50
1120	1986.00
1130	1986.50

TABLE K-2 CDMA 1900 INTERMEDIATE CHANNEL LIST

CDMA 1900	
Channel	**Frequency (MHz)**
1140	1987.00
1150	1987.50
1160	1988.00
1170	1988.50
1175	1988.75

TABLE K-3 CDMA AWS-1 BAND (3GPP2 BAND CLASS 15) INTERMEDIATE FREQUENCIES

CDMA 2100/1700	
Channel	**Frequency (MHz)**
25	2111.25
30	2111.50
40	2112.00
50	2112.50
60	2113.00
70	2113.50
80	2114.00
90	2114.50
100	2115.00
110	2115.50
120	2116.00
130	2116.50
140	2117.00
150	2117.50
160	2118.00
170	2118.50
180	2119.00
190	2119.50
200	2120.00
210	2120.50
220	2121.00
230	2121.50
240	2122.00
250	2122.50
260	2123.00

TABLE K-3 CDMA AWS-1 BAND (3GPP2 BAND CLASS 15) INTERMEDIATE FREQUENCIES

CDMA 2100/1700	
Channel	**Frequency (MHz)**
270	2123.50
280	2124.00
290	2124.50
300	2125.00
310	2125.50
320	2126.00
330	2126.50
340	2127.00
350	2127.50
360	2128.00
370	2128.50
380	2129.00
390	2129.50
400	2130.00
410	2130.50
420	2131.00
430	2131.50
440	2132.00
450	2132.50
460	2133.00
470	2133.50
480	2134.00
490	2134.50
500	2135.00
510	2135.50
520	2136.00
530	2136.50
540	2137.00
550	2137.50
560	2138.00
570	2138.50
580	2139.00
590	2139.50
600	2140.00
610	2140.50
620	2141.00
630	2141.50

TABLE K-3 CDMA AWS-1 BAND (3GPP2 BAND CLASS 15) INTERMEDIATE FREQUENCIES

CDMA 2100/1700	
Channel	**Frequency (MHz)**
640	2142.00
650	2142.50
660	2143.00
670	2143.50
680	2144.00
690	2144.50
700	2145.00
710	2145.50
720	2146.00
730	2146.50
740	2147.00
750	2147.50
760	2148.00
770	2148.50
780	2149.00
790	2149.50
800	2150.00
810	2150.50
820	2151.00
830	2151.50
840	2152.00
850	2152.50
860	2153.00
870	2153.50
875	2153.75

K.2 GSM Intermediate Channel List

All channels shall be tested for GSM, GPRS and EGPRS 850/1900 for the intermediate channel test.

K.3 UMTS (W-CDMA) Intermediate Channel List

This intermediate channel list shall be used for UMTS.

TABLE K-4 UMTS BAND V INTERMEDIATE FREQUENCIES

UMTS 850	
Channel	**Frequency (MHz)**
4357	871.40
4360	872.00
4372	874.40
4384	876.80
4396	879.20
4408	881.60
4420	884.00
4432	886.40
4444	888.80
4456	891.20
4458	891.60

TABLE K-5 UMTS BAND II INTERMEDIATE FREQUENCIES

UMTS 1900	
Channel	**Frequency (MHz)**
9662	1932.40
9668	1933.60
9680	1936.00
9692	1938.40
9704	1940.80
9716	1943.20
9728	1945.60
9740	1948.00
9752	1950.40
9764	1952.80
9776	1955.20
9788	1957.60
9800	1960.00
9812	1962.40
9824	1964.80

TABLE K-5 UMTS BAND II INTERMEDIATE FREQUENCIES

UMTS 1900	
Channel	**Frequency (MHz)**
9836	1967.20
9848	1969.60
9860	1972.00
9872	1974.40
9884	1976.80
9896	1979.20
9908	1981.60
9920	1984.00
9932	1986.40
9938	1987.60

TABLE K-6 UMTS BAND IV INTERMEDIATE FREQUENCIES

UMTS 2100/1700	
Channel	**Frequency (MHz)**
1537	2112.40
1542	2113.40
1554	2115.80
1566	2118.20
1578	2120.60
1590	2123.00
1602	2125.40
1614	2127.80
1626	2130.20
1638	2132.60
1650	2135.00
1662	2137.40
1674	2139.80
1686	2142.20
1698	2144.60
1710	2147.00
1722	2149.40
1734	2151.80
1738	2152.60

K.4 LTE Intermediate Channel List

TABLE K-7 LTE INTERMEDIATE CHANNEL MEASUREMENTS TABLE

Band	Channel Bandwidth (MHz)	Channel	Frequency (MHz)	UL RB Allocation	DL RB Allocation
2[1]	10	650	1935	50 RB with RBstart=0	50 RB with RBstart=0
2	10	740	1944	50 RB with RBstart=0	50 RB with RBstart=0
2	10	820	1952	50 RB with RBstart=0	50 RB with RBstart=0
2	10	900	1960	50 RB with RBstart=0	50 RB with RBstart=0
2	10	980	1968	50 RB with RBstart=0	50 RB with RBstart=0
2	10	1060	1976	50 RB with RBstart=0	50 RB with RBstart=0
2	10	1150	1985	50 RB with RBstart=0	50 RB with RBstart=0
4	10	2000	2115	50 RB with RBstart=0	50 RB with RBstart=0
4	10	2090	2124	50 RB with RBstart=0	50 RB with RBstart=0
4	10	2175	2132.5	50 RB with RBstart=0	50 RB with RBstart=0
4	10	2260	2141	50 RB with RBstart=0	50 RB with RBstart=0
4	10	2350	2150	50 RB with RBstart=0	50 RB with RBstart=0
5[2]	10	2450	874	25 RB with RBstart=25	50 RB with RBstart=0
5	10	2525	881.5	25 RB with RBstart=25	50 RB with RBstart=0
5	10	2600	889	25 RB with RBstart=25	50 RB with RBstart=0
12	10	5060	734	20 RB with RBstart=30	50 RB with RBstart=0
12	10	5130	741	20 RB with RBstart=30	50 RB with RBstart=0
13	10	5230	751	15 RB with RBstart=0	50 RB with RBstart=0
14	10	5330	763	20 RB with RBstart=0	50 RB with RBstart=0
17[3]	10	5800	741	20 RB with RBstart=30	50 RB with RBstart=0
25[1]	5	8065	1932.5	25 RB with RBstart=0	25 RB with RBstart=0
25	5	8105	1936.5	25 RB with RBstart=0	25 RB with RBstart=0
25	5	8145	1940.5	25 RB with RBstart=0	25 RB with RBstart=0
25	5	8185	1944.5	25 RB with RBstart=0	25 RB with RBstart=0
25	5	8225	1948.5	25 RB with RBstart=0	25 RB with RBstart=0
25	5	8265	1952.5	25 RB with RBstart=0	25 RB with Rbstart=0
25	5	8305	1956.5	25 RB with RBstart=0	25 RB with RBstart=0

TABLE K-7 LTE INTERMEDIATE CHANNEL MEASUREMENTS TABLE

Band	Channel Bandwidth (MHz)	Channel	Frequency (MHz)	UL RB Allocation	DL RB Allocation
25	5	8345	1960.5	25 RB with RBstart=0	25 RB with RBstart=0
25	5	8365	1962.5	25 RB with RBstart=0	25 RB with RBstart=0
25	5	8385	1964.5	25 RB with RBstart=0	25 RB with RBstart=0
25	5	8425	1968.5	25 RB with RBstart=0	25 RB with RBstart=0
25	5	8465	1972.5	25 RB with RBstart=0	25 RB with RBstart=0
25	5	8505	1976.5	25 RB with RBstart=0	25 RB with RBstart=0
25	5	8545	1980.5	25 RB with RBstart=0	25 RB with RBstart=0
25	5	8585	1984.5	25 RB with RBstart=0	25 RB with RBstart=0
25	5	8625	1988.5	25 RB with RBstart=0	25 RB with RBstart=0
25	5	8665	1992.5	25 RB with RBstart=0	25 RB with RBstart=0
26[2]	5	8715	861.5	25 RB with RBstart=0	25 RB with RBstart=0
26	5	8755	865.5	25 RB with RBstart=0	25 RB with RBstart=0
26	5	8795	869.5	25 RB with RBstart=0	25 RB with RBstart=0
26	5	8835	873.5	25 RB with RBstart=0	25 RB with RBstart=0
26	5	8865	876.5	25 RB with RBstart=0	25 RB with RBstart=0
26	5	8895	879.5	25 RB with RBstart=0	25 RB with RBstart=0
26	5	8935	883.5	25 RB with RBstart=0	25 RB with RBstart=0
26	5	8975	887.5	25 RB with RBstart=0	25 RB with RBstart=0
26	5	9015	891.5	25 RB with RBstart=0	25 RB with RBstart=0
41	20	39750	2506	100 RB with RBstart=0	100 RB with RBstart=0
41	20	39930	2524	100 RB with RBstart=0	100 RB with RBstart=0
41	20	40110	2542	100 RB with RBstart=0	100 RB with RBstart=0
41	20	40280	2559	100 RB with RBstart=0	100 RB with RBstart=0
41	20	40450	2576	100 RB with RBstart=0	100 RB with RBstart=0
41	20	40620	2593	100 RB with RBstart=0	100 RB with RBstart=0
41	20	40790	2610	100 RB with RBstart=0	100 RB with RBstart=0
41	20	40960	2627	100 RB with RBstart=0	100 RB with RBstart=0
41	20	41130	2644	100 RB with RBstart=0	100 RB with RBstart=0
41	20	41310	2662	100 RB with RBstart=0	100 RB with RBstart=0

TABLE K-7 LTE INTERMEDIATE CHANNEL MEASUREMENTS TABLE

Band	Channel Bandwidth (MHz)	Channel	Frequency (MHz)	UL RB Allocation	DL RB Allocation
41	20	41490	2680	100 RB with RBstart=0	100 RB with RBstart=0

Note 1: If the device supports Band 25 and Band 2, then testing is only required to be completed in Band 25. The test requirements and data comparison between Bands 2 and 25 will not be directly comparable due to the usage of different RF channel bandwidths.

Note 2: Note that if the device supports Band 26 and Band 5, then testing is only required to be completed in band 26. The test requirements and data comparison between Bands 26 and 5 will not be directly comparable due to the usage of different RF channel bandwidths.

Note 3: For the purposes of GPS ICD testing, channel number 5790 and 5800 are considered equivalent for Band 17 and therefore, there are no other test points required for GPS ICD testing in Band 17.

Appendix L Notebook and Tablet Appendix (Normative)

L.1 Purpose

The purpose of this appendix is to define the CTIA Certification program test requirements for performing Radiated RF Power and Receiver Performance measurements on Notebooks and Tablets with embedded WWAN (Wireless Wide Area Network) radio modules.

L.2 Scope

The scope of this appendix is limited to specific setup and measurement criteria to be used when a Notebook or Tablet with an embedded WWAN radio is submitted to a CATL for RF Performance testing. All other equipment, equipment set up and test procedures documented in the CTIA OTA Test Plan will apply.

L.3 Definitions

Notebook- A portable personal computer combining the computer, keyboard and display in one form factor. Typically the keyboard is built into the base and the display is hinged along the back edge of the base. A Convertible Notebook is a form factor that enables configuration as a Notebook or as a Tablet.

Tablet- A portable personal computer combining the computer and display in a single form factor resembling a writing slate. User input is typically accomplished via a touchscreen or stylus pen.

L.4 Equipment Under Test - Setup

The EUT shall be tested in an idle state and shall be configured as follows (as it applies). The manufacturer shall provide instructions to the CATL for placing the EUT in this state.

- Display:
  - Angled for a Notebook

    ⇒110 ±5° from the leveled base to the front of the display LCD (Liquid Crystal Display).

    ⇒Or manufacturer's locked position closest to 110°.
  - Parallel to the X-Y plane for a Tablet
- Transmitting radios:
  - WWAN - On
  - WLAN (Wireless Local Area Network)- Off
  - Bluetooth™ - Off
  - WiMAX™ - Off
  - UWB (Ultra Wideband)- Off
  - All other embedded transmitting radios that are not being tested - Off
- Power Management Settings
  - Screensaver - None
  - Turn Off Display - Never
  - Turn Off Hard Drive - Never
  - System Hibernate - Never
  - System Standby - Never
- Display (LCD) Backlight - Medium intensity (50% or equivalent)
  - Ambient light sensor - Disabled
- Keyboard Backlight - Off
  - Ambient light sensor - Disabled
- Powered by the battery (standard battery only)
- Dynamic control or throttling of CPU and bus clock frequencies - Disabled, if possible.
  - May be accomplished via Microsoft® Windows power profile settings (e.g., Microsoft® XP “Always On” power scheme and Microsoft® Vista “Max Performance” power plan). The Microsoft® Windows power profile must not override the Power Management settings identified above (display, hard drive, etc.)
  - Device manufacturer to provide CATL with specific guidance

- As required, a user-configurable WWAN antenna will be positioned in accordance with the manufacturer's recommended configuration (See Section 1.6 for further information).

L.5 Testing of Physically Reconfigurable Devices

Certain devices support usage in more than one physical configuration, such as Convertible Notebooks. Each configuration may produce different radiated performance due to possible changes in antenna performance and self-interference. Consequently, such devices may require testing in more than one configuration. At a minimum, the device shall be tested in the manufacturer's recommended configuration(s).

L.6 Notebooks and Tablets with Extendable/Retractable Antennas

Unlike handsets, some retractable antennas installed in embedded Notebooks and Tablets are functional only in the extended position. In such cases, the device shall only be tested with the antenna in the manufacturer's recommended configuration.

L.7 Multi-Protocol Devices

Embedded WWAN data modules commonly support multiple protocols or air interfaces (e.g. GPRS/EGPRS/UMTS) within the same frequency band. In cases where particular modes are not relevant to the intended use of the EUT, it is allowable to test only a subset of the supported protocols. The device manufacturer shall specify the intended use cases.

Note that these guidelines shall not preclude using the alternative single-point and multi-point offset test procedures for TIS and TRP described in the CTIA OTA Test Plan. For example, in the event that the manufacturer and operator agree that voice-mode results are not required for certification, the CATL may nevertheless opt to measure TIS and TRP in a voice mode to take advantage of the test time optimization provided by those alternative procedures. The manufacturer should be aware that certain protocols not required by the operator for certification may nonetheless be needed by the CATL and should be available on the device submitted for testing.

L.8 Free Space Testing

Since Notebooks and Tablets are not body-worn devices and they are not recommended for use placed directly on the lap, the EUT shall be tested in a Free Space configuration.

If a fixture is required to mount the EUT to the positioning system, the EUT holding fixture shall be made of a material with a dielectric constant of less than 5.0, and loss tangent less than 0.05. The fixture shall not extend beyond the footprint of the EUT by more than 20 mm, and shall be no more than 20 mm in thickness. It is recommended, but not required, that a Styrofoam spacer be used between the holding fixture and the EUT. For systems where no holding fixture is required, a spacer made of expanded polystyrene may be used to raise the EUT to the required height.

L.9 Chamber Placement

To minimize the physical volume occupied by the EUT during testing, the center of rotation shall be the three-dimensional geometric center of the EUT. In the case of an open Notebook, this will typically be a point in space above the keyboard and in front of the display.

This section describes a suggested procedure to locate the geometric center of rotation for Notebook and Tablet form factors. This procedure has been verified to produce repeatable positioning within a margin of ±10 mm in all dimensions. For distributed-axis systems, the procedure assumes the availability of a laser crosshair system in the chamber. The laser is required to have a vertical and horizontal beam such that the intersection of the beams passes through the origin of the chamber coordinate axes.

For combined-axis systems, laser guides are not required, since the pedestal assembly constrains the dimensions in which the EUT may be positioned. However, this procedure assumes that the range pedestal is properly aligned such that the phi and theta rotational axes intersect at a point in space precisely above the theta turntable hub. It also assumes that the rotational center of the theta turntable is clearly and precisely marked. Alignment of the EUT with the theta axis of the pedestal can be accomplished by means of a plumb line or laser level (capable of projecting a plumb line) placed on the turntable at its center of rotation.

L.9.1 Positioning a Notebook Relative to the Chamber Coordinate System

The reference plane for the EUT is defined as the plane on which the base of the EUT sits. This plane will be normal to the phi axis of the chamber.

Before placing the EUT in the chamber, place the Notebook on a level surface and with the Notebook open, with an angle of 110° between the LCD display and the level surface, locate and mark the points labeled A to H in Figure L-1. Care should be taken to ensure that the display of the laptop does not move outside of the 110 degree ±5 degree allowed limits. It may be necessary to fix the angle of the display with RF transparent EPS (Expanded Polystyrene foam or Styrofoam), using the minimum amount necessary to perform the support function.

FIGURE L-1 POSITION OF NOTEBOOK RELATIVE TO THE CHAMBER COORDINATES

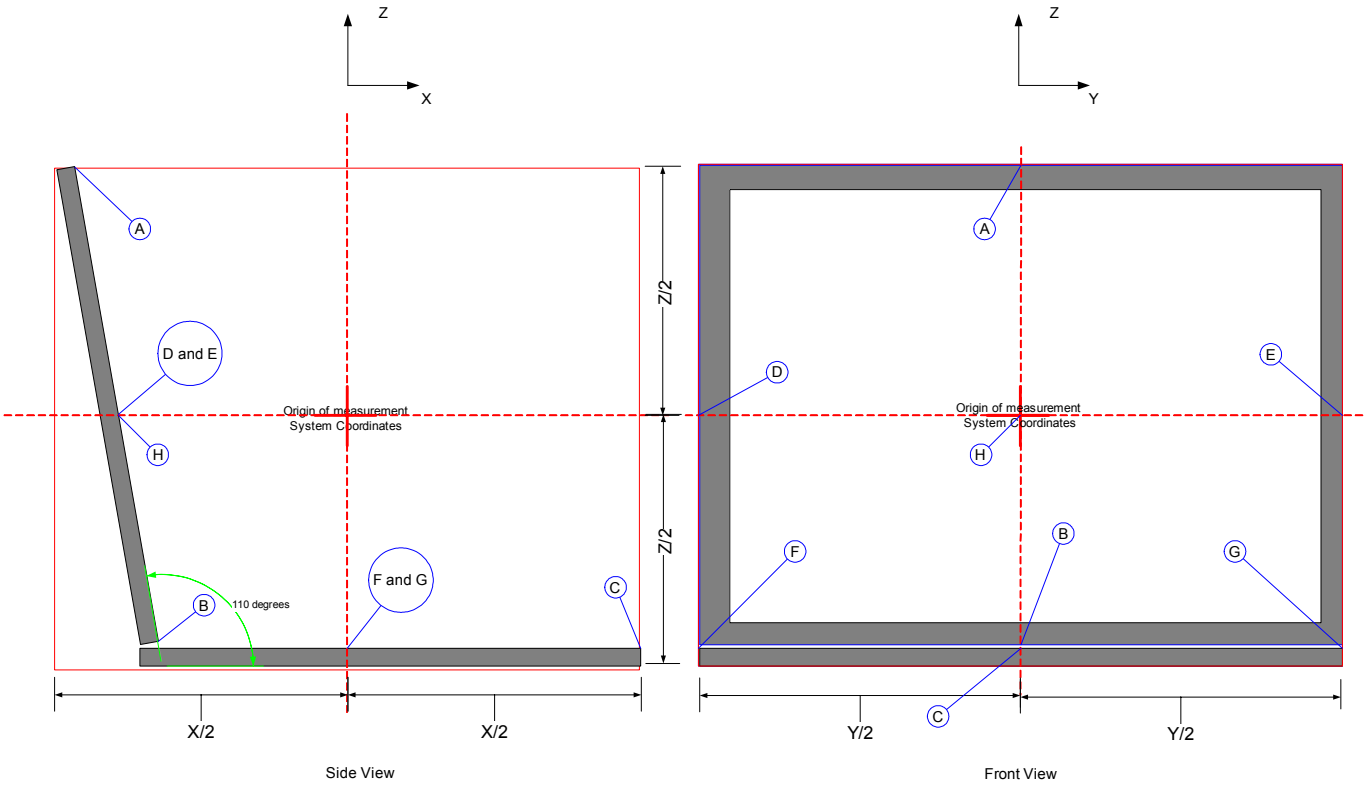

Point H is at the intersection of lines joining points A to B and D to E and is on the face of the LCD

L.9.1.1 Distributed-Axis, Conical Cut Chamber

1. Place the Notebook on the central plinth with the LCD, +X EUT axis, facing in the Phi = 0°, Theta = 0° direction. With the assumption that the chamber laser crosshair system is directed in the Phi = 270°, Theta = 90° direction, rotate the azimuth table to the Phi = 270° position. Adjust the height of the table so that the horizontal beam of the crosshairs intersects point H.
2. Adjust the position of the Notebook along the EUT Y-Axis so that the vertical laser beam intersects with points A, B, C and H.
3. Rotate the chamber azimuth table back to the Phi = 0° position and adjust the Notebook along the EUT X-Axis so that the vertical laser beam intersects points F

and G. If necessary place an object behind the EUT at point F to observe the location of the vertical laser beam.

4. Rotate the azimuth table back to the Phi = 270° position and recheck the alignment. Repeat if necessary.

If the chamber laser crosshair system is orientated differently, adjust the above procedure appropriately.

L.9.1.2 Combined-Axis, Great Circle Chamber

1. Mount the Notebook base on to the phi positioner such that the phi axis of rotation is centered at the intersection of the lines joining points B to C and F to G. With this intersection point clearly marked on the base of the Notebook, it should be possible to accomplish this without any special aids.
2. Rotate the EUT about the phi axis until the Notebook's X direction faces vertically downward (display facing down).
3. Adjust the pedestal along the phi axis until Point H is aligned with the theta axis, as verified by the plumb line or laser level. Any misalignment in the Y direction (theta axis does not intersect the line joining A to B) indicates inaccurate positioning about the phi axis.

L.9.2 Positioning a Tablet Relative to the Chamber Coordinate System

For Tablet form factors, it is assumed that the display faces in the +Z direction and the +X direction points towards the expected user position. For example, Figure L-2 illustrates this for a rectangular Tablet with display configured to be used in the "portrait" orientation. Since this class of device often supports multiple display orientations, the manufacturer shall submit photographs or drawings to the CATL indicating the assumed EUT reference coordinate system. These illustrations shall also be included in the test report.

Before placing the EUT in the chamber locate and mark the points labeled A to K shown in Figure L-2.

FIGURE L-2 POSITION OF TABLET RELATIVE TO THE CHAMBER COORDINATES

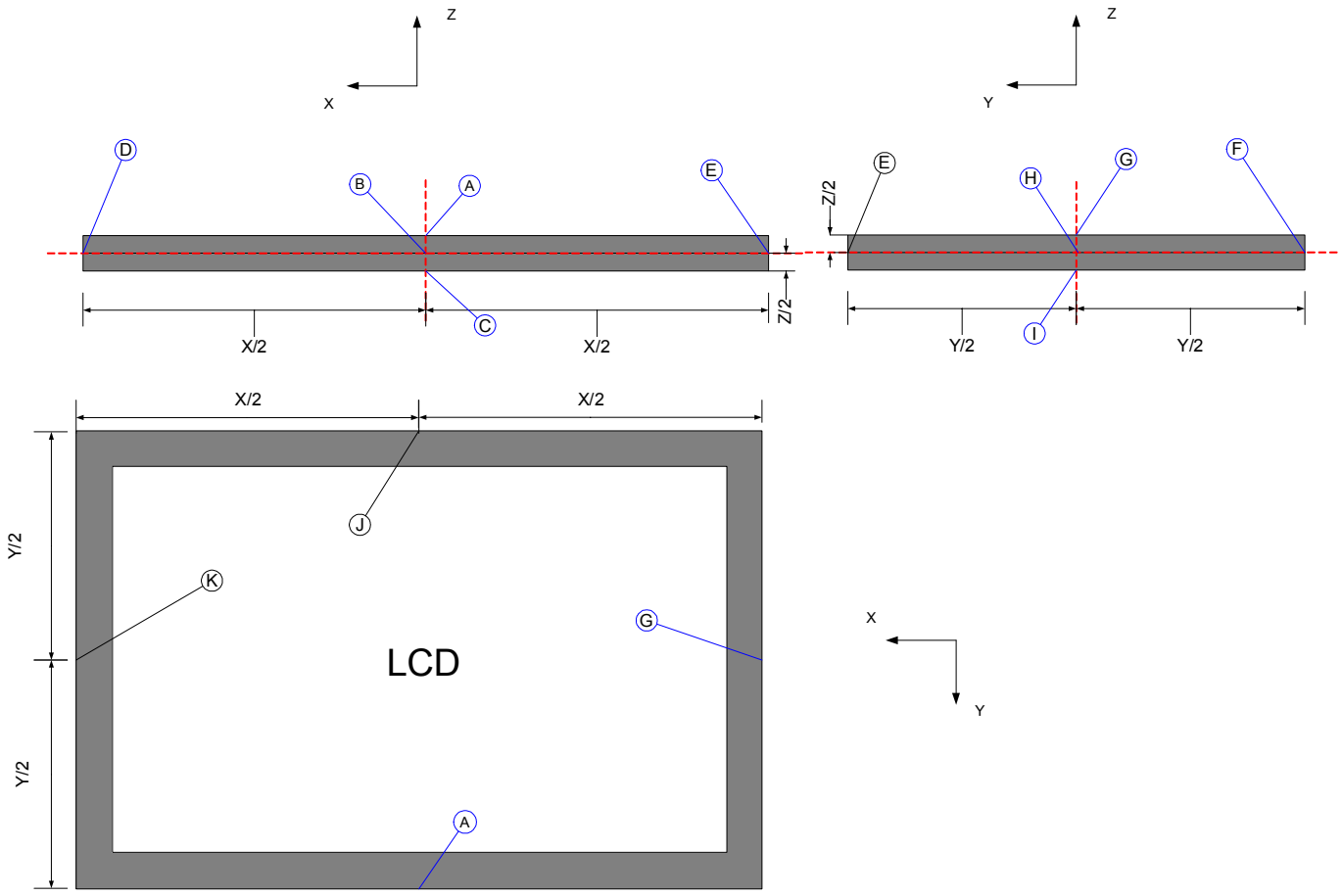

L.9.2.1 Distributed-Axis, Conical Cut Chamber

1. Place the Tablet on the central plinth with the +X EUT axis facing in the Phi = 0°, Theta = 0° direction. With the assumption that the chamber laser crosshair system is directed in the Phi = 270°, Theta = 90° direction, adjust the height of the Tablet so that the horizontal beam of the crosshairs intersects point B.
2. Adjust the position of the Tablet along the EUT X-Axis so that the vertical laser beam intersects points A, B, C and J. If necessary place an object behind the EUT at point J to observe the location of the vertical laser beam.
3. Rotate the chamber azimuth table to the Phi = 90° position and adjust the Tablet along the EUT Y-Axis so that the vertical laser beam intersects points G, H, I and K.

If necessary place an object behind the EUT at point K to observe the location of the vertical laser beam.

4. Rotate the azimuth table back to the 0° position and recheck the alignment. Repeat if necessary.

If the chamber laser crosshair system is orientated differently, adjust the above procedure appropriately.

L.9.2.2 Combined-Axis, Great Circle Chamber

1. Mount the EUT base on to the phi positioner such that the phi axis of rotation is centered at the intersection of the lines joining points A to J and G to K. With this intersection point clearly marked on the base of the Tablet, it should be possible to accomplish this without any special aids.
2. Rotate the EUT about the phi axis until the Tablet Y direction faces vertically downward.
3. Adjust the pedestal along the phi axis until Point B is aligned with the theta axis, as verified by the plumb line or laser level.
4. Rotate the EUT about the phi axis until the Tablet X direction faces vertically upward.
5. Verify that Point H is aligned with the theta axis based on the plumb line or laser level. Any misalignment indicates inaccurate positioning about the phi axis.

L.9.3 Minimum Measurement Distance Considerations

Due to the large form factor of typical Notebook computers, the minimum measurement distance criteria, in particular, the $2D^2/\lambda_u$ limit specified in Section 3.1 of the CTIA OTA Test Plan cannot be satisfied on shorter ranges.

For devices with a largest single dimension D (i.e., length, width, height) ≤ 0.42 m, a measurement distance R, where $R \geq 1.2$ m, is acceptable for TRP, TIS and average gain measurements. However, an additional standard uncertainty value must be included in the total EUT measurement uncertainty calculation to account for the violation of the far field as identified in Appendix G.19.1. Testing of devices with a largest single dimension $D > 0.42$ m is outside the scope of the guidance provided by this document.

Note that EM simulations indicate that the antenna current distribution for embedded WWAN platforms is not uniform over the EUT volume, but rather is highly localized along its outer edges adjacent to the antennas. Furthermore, the current distribution becomes more localized with increasing RF frequency. Consequently, the effective radiating aperture size D should be assumed equal to the largest single physical dimension of the EUT. For example, for a typical

widescreen Notebook computer, *D* is the width of the device, not the three-dimensional distance between one upper corner of the screen and the extreme opposite corner of the base.

L.10 Additional Measurement Uncertainty

L.10.1 Ripple Uncertainty

The ripple uncertainty associated with larger devices shall be determined as described in Section 3.7 and Appendix G.8 of the CTIA OTA Test Plan, using data collected from the additional ripple test procedure for Notebook-sized volumes defined in Section 3.6**.**

L.10.2 Uncertainty Due to Minimum Measurement Distance

Please refer to Appendix L.9.3 for guidance.

L.10.3 Additional Coarse Sampling Grid Uncertainty

The TIS measurement uncertainty associated with using a 30° pattern grid spacing is discussed in Appendix G.12 of the CTIA OTA Test Plan. It is conceivable that this source of uncertainty is worse for devices larger than the handset+head phantom combination for which this effect was originally assessed. Any additional uncertainty is only expected to occur with the largest "desktop replacement" Notebooks, and remains a topic for further investigation.

Appendix M Optional GSM, UMTS and LTE Bands (Informative)

M.1 Optional Frequency Bands and Channel Configurations

The following GSM and UMTS bands/frequencies can be tested:

TABLE M-1 GSM FREQUENCY BANDS

Operating Band	UL Frequencies MS Transmit, BTS Receive (MHz)	DL Frequencies MS Receive, BTS Transmit (MHz)
P-GSM 900	890 - 915	935 - 960
E-GSM 900	880 - 915	925 - 960
DCS 1800	1710-1785	1805-1880

TABLE M-2 GSM CHANNELS

Operating Band	Channels		
	Low	Mid	High
P-GSM 900	1	62	124
E-GSM 900	975	38	124
DCS 1800	512	699	885

TABLE M-3 UMTS FREQUENCY BANDS

Operating Band	UL Frequencies UE transmit, Node B Receive (MHz)	DL Frequencies UE receive, Node B Transmit (MHz)
I	1920 - 1980	2110 -2170
III	1710-1785	1805-1880
VIII	880 - 915	925 - 960

TABLE M-4 UMTS CHANNELS

Operating Band	UL Channels			DL Channels		
	Low	Mid	High	Low	Mid	High
I	9612	9750	9888	10562	10700	10838
III	937	1113	1288	1162	1338	1513
VIII	2712	2788	2863	2937	3013	3088

TABLE M-5 LTE FREQUENCY BANDS

Operating Band	UL Frequencies, UE Transmit, eNodeB Receive (MHz)	DL Frequencies, UE Receive, eNodeB Transmit (MHz)
1	1920-1980	2110-2170
3	1710-1785	1805-1880
7	2500-2570	2620-2690
8	880-915	925-960
20	832-862	791-821
38	2570-2620	2570-2620
39	1880-1920	1880-1920
40	2300-2400	2300-2400

TABLE M-6 LTE TRP CHANNELS AND RB ALLOCATIONS

Band	Channel Bandwidth (MHz)	Channel	UL RB Allocation	DL RB Allocation
1 Low	10	18050	12 RB with RBstart=0	None, control only[1]
1 Mid	10	18300	12 RB with RBstart=19	None, control only[1]
1 High	10	18550	12 RB with RBstart=38	None, control only[1]
3 Low	10	19250	12 RB with RBstart=0	None, control only[1]
3 Mid	10	19575	12 RB with RBstart=19	None, control only[1]

TABLE M-6 LTE TRP CHANNELS AND RB ALLOCATIONS

Band	Channel Bandwidth (MHz)	Channel	UL RB Allocation	DL RB Allocation
3 High	10	19900	12 RB with RBstart=38	None, control only[1]
7 Low	10	20800	12 RB with RBstart=0	None, control only[1]
7 Mid	10	21100	12 RB with RBstart=19	None, control only[1]
7 High	10	21400	12 RB with RBstart=38	None, control only[1]
8 Low	10	21500	12 RB with RBstart=0	None, control only[1]
8 Mid	10	21625	12 RB with RBstart=19	None, control only[1]
8 High	10	21750	12 RB with RBstart=38	None, control only[1]
20 Low	10	24200	12 RB with RBstart=0	None, control only[1]
20 Mid	10	24300	12 RB with RBstart=19	None, control only[1]
20 High	10	24400	12 RB with RBstart=38	None, control only[1]
38 Low	20	37850	18 RB with RBstart=0	None, control only[1]
38 Mid	20	38000	18 RB with RBstart=41	None, control only[1]
38 High	20	38150	18 RB with RBstart=82	None, control only[1]
39 Low	20	38350	18 RB with RBstart=0	None, control only[1]
39 Mid	20	38450	18 RB with RBstart=41	None, control only[1]
39 High	20	38550	18 RB with RBstart=82	None, control only[1]
40 Low	20	38750	18 RB with RBstart=0	None, control only[1]
40 Mid	20	39150	18 RB with RBstart=41	None, control only[1]
40 High	20	39550	18 RB with RBstart=82	None, control only[1]
Note 1: As per 3GPP TS 36.521-1, Section 6.2 (UE Maximum Output Power).				

TABLE M-7 LTE TIS CHANNELS AND RB ALLOCATIONS

Band	Channel Bandwidth (MHz)	Channel	UL RB Allocation	DL RB Allocation
1 Low	10	50	50 RB with RBstart=0	50 RB with RBstart=0
1 Mid	10	300	50 RB with RBstart=0	50 RB with RBstart=0
1 High	10	550	50 RB with RBstart=0	50 RB with RBstart=0
3 Low	10	1250	50 RB with RBstart=0	50 RB with RBstart=0
3 Mid	10	1575	50 RB with RBstart=0	50 RB with RBstart=0

TABLE M-7 LTE TIS CHANNELS AND RB ALLOCATIONS

Band	Channel Bandwidth (MHz)	Channel	UL RB Allocation	DL RB Allocation
3 High	10	1900	50 RB with RBstart=0	50 RB with RBstart=0
7 Low	10	2800	50 RB with RBstart=0	50 RB with RBstart=0
7 Mid	10	3100	50 RB with RBstart=0	50 RB with RBstart=0
7 High	10	3400	50 RB with RBstart=0	50 RB with RBstart=0
8 Low	10	3500	25 RB with RBstart=25	50 RB with RBstart=0
8 Mid	10	3625	25 RB with RBstart=25	50 RB with RBstart=0
8 High	10	3750	25 RB with RBstart=25	50 RB with RBstart=0
20 Low	10	6200	20 RB with RBstart=0	50 RB with RBstart=0
20 Mid	10	6300	20 RB with RBstart=0	50 RB with RBstart=0
20 High	10	6400	20 RB with RBstart=0	50 RB with RBstart=0
38 Low	20	37850	100 RB with RBstart=0	100 RB with RBstart=0
38 Mid	20	38000	100 RB with RBstart=0	100 RB with RBstart=0
38 High	20	38150	100 RB with RBstart=0	100 RB with RBstart=0
39 Low	20	38350	100 RB with RBstart=0	100 RB with RBstart=0
39 Mid	20	38450	100 RB with RBstart=0	100 RB with RBstart=0
39 High	20	38550	100 RB with RBstart=0	100 RB with RBstart=0
40 Low	20	38750	100 RB with RBstart=0	100 RB with RBstart=0
40 Mid	20	39150	100 RB with RBstart=0	100 RB with RBstart=0
40 High	20	39550	100 RB with RBstart=0	100 RB with RBstart=0

All test parameter settings as specified in Section 5 and Section 6 shall be used where applicable. The following items are not required for these bands:

- Ripple tests
- Measurement uncertainty limits
- Intermediate channel testing
- GPRS/EDGE measurements
- GPS measurements

Some test configurations may be excluded.

As noted, measurement uncertainty limits will not be required, because ripple testing is not required. However, measurement uncertainty calculations can be provided as an estimation using MU values from the closest frequency band where full MU assessment is required.

M.2 Considerations in Measurements of TRP for LTE TDD UEs

The contents of this section are no longer needed since they have been incorporated in Appendix D.9 *in V3.3.*

M.3 Requirements for Measurement of Optional LTE Channel Bandwidths

The contents of this section are no longer needed since they have been incorporated in Appendix D.9 *in V3.3.*

Appendix N Path Loss Errors Induced by Propagation Delay (Informative)

N.1 Description and Overview

Most traditional Network Analyzer (either Scalar or Vector) and Spectrum Analyzer / Tracking Generator measurements are made with short cables. In an OTA chamber there is significant propagation delay from the source to the receiver, due to the long cable lengths as well as the over-the-air path length. When swept measurements are made, by the time the signal travels from the source to the receiver, the instrument will be tuned to a higher frequency. This will result in an amplitude error that is a product of the [generally Gaussian] bandwidth filter response curve in (dB/Hz), the sweep rate in (Hz/s), and the propagation delay in (s).

There may be additional factors for particular instruments due to settling time issues if the synthesizer re-locks, or if the instrument performs other housekeeping, during the sweep.

Although list-based network analyzer measurements theoretically ought not exhibit this same phenomenon, propagation delay error is still possible depending on the combination of cable length, path loss length, instrument bandwidth, instrument settling time and instrument sampling time.

In general, the means of mitigating this problem for swept-based measurements is to slow down the sweep speed. In general, the means of mitigating this problem for list-based measurements is to delay the measurement sampling time (which may require an increase in the dwell time).

Discrete signal generator and receiver combinations are not subject to this phenomenon. As such, this discrete topology provides the most accurate verification for swept and list-based instrument configurations.

N.2 Verification Principles

Problems with swept measurements can typically be identified by slowing the sweep speed and watching for an increase in the measured signal (reduction in path loss). Depending on the particular instrument's coupling between IF Bandwidth and Sweep Time, reducing the IF Bandwidth may be used to identify this phenomenon. The result can assumed to be valid when further adjustment of the settings causes no further increase in the measured signal level.

Problems with list-based measurements can typically be identified by delaying the measurement sampling time and watching for an increase in the measured signal (reduction in

path loss). The result can assumed to be valid when further adjustment of the settings causes no further increase in the measured signal level.

For both swept and list-based measurements the result is determined to be valid when the path loss at a given frequency when measured in the swept or list mode and the path loss at the same frequency when measured in the CW mode are within the repeatability of the instrumentation.

N.3 CW Verification Procedure

A set of CW measurements is made and compared to the automated swept or list-based measurements. The CW tests specifically utilize the procedures described in Section 4.4.1 Step 4.c. and Section 4.4.2 Step 5. c. The respective steps a. and b. of these clauses describe vector and scalar measurement procedures.

For instrument sweeps or spans that encompass multiple dipole frequencies, it is recommended that CW measurements be performed at the center frequency of each of three reference dipoles (the lowest frequency dipole, the dipole nearest the mid-frequency of the sweep and the highest frequency dipole). For instrument sweeps or spans that encompass only one dipole frequency range, it is recommended that CW measurements be performed at the low, center and high frequencies of the dipole.

The CW measurements are performed in one configuration then compared with the results of the corresponding swept or list-based measurement(s) in the same configuration. Following are relevant conditions:

- The overall cable lengths for all configurations (combination of Theta/Phi polarization and TRP/TIS path) are approximately the same.
- The CW measurements utilize the same instrument settings as the swept or list-based measurements.
- The CW measurements use the same type of Calibration (Normalization / Full 2-port, etc. as chosen) as the swept or list-based measurements.
- The CW measurements are performed manually and the swept or list-based measurements are performed either manually or with the system software (as chosen).

If there is a significant difference in the various (Theta/Phi/TRP/TIS) path lengths then it is recommended to make measurements over the longest path; shorter lengths can be considered for additional verification.

Generally, verification only needs to be performed once for a particular combination of chamber model, coax cable length, instrument model and instrument settings.

Appendix O Recommended Use Cases and Special Test Requirements (Informative)

O.1 Purpose

The purpose of this appendix is to recommend test applicability by device type and define special test requirements.

This appendix is written in a normative context, but all or portions of the text may be considered normative or informative based on the certification body that incorporates the test plan.

O.2 Definitions

Integrated Device- A device that embeds a Module. Notebook PCs, Tablet PCs and Ultra-Mobile PCs are special categories of Integrated Devices and are separately defined)

Module- A finished WWAN radio device that does not directly connect to a host via a standardized external interface such as PCMCIA, RS-232, USB, PCIExpress, etc.

Tablet- A general-purpose computer, with WWAN capability, contained in a single panel. It often uses a touch screen as the input device

USB Modem- A modem that plugs into the USB port of a computer.

O.3 Testing Required—Head and Hand Phantom, and Free-Space

- Devices supporting usage against the head

Note: *If a device has multiple mechanical configurations in which to make a call, each mechanical configuration representative of end use, where the receiver is placed on the ear, shall be tested (e.g., a portrait slide phone shall be tested in both slide open and slide closed positions, a side slide phone shall be tested only in the slide closed position, a fold phone shall be tested only in the open position). Device mechanical configurations that are not representative of end use do not need to be tested in head and hand phantom, and free-space conditions. Testing in non-primary mechanical modes is only required on the mid channel; low and high channel testing in non-primary mechanical modes is not required. Note that for intermediate channel testing of non-primary mechanical modes, the mid channel is used as the reference channel for all intermediate channel tests because TIS is not tested at the low and high channels. Devices that exceed the maximum dimensions specified for the hand phantom configurations defined in this test plan do not need to be tested in the head and hand phantom*

condition. For the tested mechanical configurations and in the free-space configuration, all cellular radio modes capable of voice and data operation shall be tested. For the tested mechanical configurations and in the head-adjacent configurations, all cellular radio modes capable of voice operation shall be tested. In the case of cellular data modes in head-adjacent configurations, these radio modes would be tested only if the device, as manufactured, supports voice operation over the data connection (e.g., VoIP). GPS OTA testing is not required in the head phantom only and free-space configurations as specified in this test plan. Also, the vendor shall submit to the CATL a declaration of the primary mechanical mode as referenced in this test plan. The CATL shall use the primary mechanical mode when applying the pass/fail limits.

O.4 Testing Required - Hand Phantom Only

- Devices supporting data usage in the hand phantom only test configuration (devices that also support usage against the head shall be tested per Appendix O.3 of this document)

Note: *If a device has multiple mechanical configurations in which it can be held in the hand for data usage scenarios where the display is visible to the end user, each mechanical configuration representative of end use shall be tested as long as the device can still meet the maximum dimensions specified for the hand phantom configurations defined in this test plan. Device mechanical configurations that are not representative of end use in the hand for data usage scenarios where the display is visible to the end user or exceed the maximum dimensions specified for the hand phantom configurations defined in this test plan do not need to be tested in the hand phantom only condition. Testing in non-primary mechanical modes, with the exception of GSM HL and HR tests (see below), is only required on the mid channel; low and high channel testing in non-primary mechanical modes is not required. Note that for intermediate channel testing of non-primary mechanical modes, the mid channel is used as the reference channel for all intermediate channel tests because TIS is not tested at the low and high channels. For the tested mechanical configurations, all cellular radio modes capable of voice and data operation shall be tested. Also, the vendor shall submit to the CATL a declaration of the primary mechanical mode as referenced in this test plan. The CATL shall use the primary mechanical mode when applying the pass/fail limits.*

GSM HL and HR tests are optional and are currently not a requirement of this Test Plan, but may be used for single and multiple offset point reference tests including GPRS/EGPRS.

O.5 Testing Required—Free-Space Only

- Integrated Devices with an integrated, non-removable antenna attached to the device and not meeting the criteria in Appendix O.3 and Appendix O.4 above integrated, non-removable antenna attached to the device [Note 1 and Note 2].

- Integrated Devices with a removable antenna physically attached to the device and not meeting the criteria in Appendix O.3 and Appendix O.4 above [Note 1 and Note 2]
- Integrated Devices with a removable antenna connected directly to the device via an RF transmission line (such as a coaxial cable) less than 20 cm in length and not meeting the criteria in Appendix O.3 and Appendix O.4 above. [Note 1 and Note 2]
- Notebooks and Ultra-Mobile PCs with embedded WWAN (Wireless Wide Area Network) radio modules [Note 2 and Note 3].
- Tablets not meeting the criteria in Appendix O.3 and Appendix O.4 above [Note 2 and Note 3].

Note 1: *Physically large or heavy devices that cannot be placed in an OTA chamber, might be tested in a configuration that represents the actual usage (e.g., antenna mounted on a ground plane 60 cm x 60 cm or other material used on the actual device).*

Note 2: *Some devices include sensors which reduce the transmitter's RF output power when in close proximity to the user. TRP measurements of any device that includes user proximity RF power reduction shall be made when the proximity sensor is not activated (e.g. device is operating at full RF output power). The PTCRB lab shall also measure the device's RF output power when the proximity sensor is activated. This measurement may be made using either conducted or radiated techniques, and the lab shall document the proximity sensor's RF power reduction in dB.*

Note 3: *WWAN radiated performance testing shall be executed on every band supported by the notebook's module. In addition, radiated performance testing shall be executed for every airlink technology supported by the notebook's module according to Table O-1 below. Radiated performance testing shall be executed according to the most current version of this test plan.*

TABLE O-1 AIRLINK TECHNOLOGY TEST REQUIREMENTS

Airlink Technologies Supported By EUT	Airlink Technologies Subject to Radiated Performance Testing
GPRS, EGPRS, UMTS, LTE	UMTS, LTE
EGPRS, UMTS, LTE	UMTS, LTE
UMTS, LTE	UMTS, LTE
GPRS, UMTS, LTE	UMTS, LTE
GPRS, EGPRS, UMTS	EGPRS, UMTS
EGPRS, LTE	EGPRS, LTE
EGPRS, UMTS	EGPRS, UMTS
GPRS, EGPRS	GPRS, EGPRS

TABLE O-1 AIRLINK TECHNOLOGY TEST REQUIREMENTS

Airlink Technologies Supported By EUT	Airlink Technologies Subject to Radiated Performance Testing
1xRTT Data, 1xEV-DO	1xEV-DO
1xRTT Data, 1xEV-DO, LTE	1xEV-DO, LTE

O.6 Testing Not Required

Note: *The vendor shall consult with the carrier(s) to which it intends to sell the device to determine whether carrier-specific testing may be required. If no testing is conducted, the lab shall provide a detailed justification document stating that the device falls into one of the categories listed below.*

- Integrated Devices without a defined antenna and not meeting the criteria in Appendix O.3 and Appendix O.4 above.
- Integrated Devices with a removable antenna that is connected to the device through an RF transmission line (such as a coaxial cable) greater than 20 cm in length and not physically attached to the host device and not meeting the criteria in Appendix O.3 and Appendix O.4 above. The no-testing-required justification document noted above shall include a vendor-provided list of recommended external antennas. The vendor shall also include this list in the product user manual.
- Modules
- PCMCIA cards and ExpressCards
- USB Modems
- Variants or re-branded devices having no altered RF performance from their parent device

O.7 Special Test Requirements

O.7.1 LTE Relative Sensitivity on Intermediate Channels Test

Until such time that free-space limits are added for LTE TIS, the relative sensitivity on intermediate channels testing process shall be modified to report the FS $EIS_{(IC)}$ and BHHR $EIS_{(IC)}$, if applicable, at each LTE Intermediate Channel test channel (including the reference test channels) as defined in Appendix K.4. FS $EIS_{(IC)}$ and BHHR $EIS_{(IC)}$ are equivalent to FS $EIS_{(peak)}$ and BHHR $EIS_{(peak)}$ for the reference channels. Please refer to the relative sensitivity testing process in Section 6.8.3 for a general definition of FS $EIS_{(peak)}$ and BHHR $EIS_{(peak)}$. The same position and polarization shall be used for the intermediate channels as used for the corresponding reference channels. The results shall be reported using the following template.

TABLE O-2 LTE RELATIVE SENSITIVITY ON INTERMEDIATE CHANNELS

Band	Channel Bandwidth (MHz)	Channel	Frequency (MHz)	FS $EIS_{(IC)}$ (dBm)	BHHR $EIS_{(IC)}$ (dBm)
2	10	650	1935		
2	10	740	1944		
2	10	820	1952		
2	10	900	1960		
2	10	980	1968		
2	10	1060	1976		
2	10	1150	1985		
4	10	2000	2115		
4	10	2090	2124		
4	10	2175	2132.5		
4	10	2260	2141		
4	10	2350	2150		
25	5	8065	1932.5		
25	5	8105	1936.5		
25	5	8145	1940.5		
25	5	8185	1944.5		
25	5	8225	1948.5		
25	5	8265	1952.5		
25	5	8305	1956.5		

TABLE O-2 LTE RELATIVE SENSITIVITY ON INTERMEDIATE CHANNELS

Band	Channel Bandwidth (MHz)	Channel	Frequency (MHz)	FS $EIS_{(IC)}$ (dBm)	BHHR $EIS_{(IC)}$ (dBm)
25	5	8345	1960.5		
25	5	8365	1962.5		
25	5	8385	1964.5		
25	5	8425	1968.5		
25	5	8465	1972.5		
25	5	8505	1976.5		
25	5	8545	1980.5		
25	5	8585	1984.5		
25	5	8625	1988.5		
25	5	8665	1992.5		
26	5	8715	861.5		
26	5	8755	865.5		
26	5	8795	869.5		
26	5	8835	873.5		
26	5	8865	876.5		
26	5	8895	879.5		
26	5	8935	883.5		
26	5	8975	887.5		
26	5	9015	891.5		
41	20	39750	2506		
41	20	39930	2524		
41	20	40110	2542		
41	20	40280	2559		
41	20	40450	2576		
41	20	40620	2593		
41	20	40790	2610		
41	20	40960	2627		
41	20	41130	2644		
41	20	41310	2662		
41	20	41490	2680		

O.7.2 CDMA 2100/1700 Relative Sensitivity on Intermediate Channels Test

The contents of this section are no longer needed since OTA limits have been adopted for CDMA 1700/2100 in Section 5 and Section 6 in V3.3.

O.7.3 Removal of Single Orientation Allowance in the Relative Sensitivity on Intermediate Channel Testing

The contents of this section are no longer needed since Section 6 has been updated to remove the single orientation allowance in the relative sensitivity on intermediate channel testing in V3.3.

O.7.4 Waiver for LTE A-GPS OTA Testing when using LPP as a Positioning Protocol

The contents of this section are no longer needed since test solutions for A-GPS over LTE using LPP have been validated and listed on the authorized test equipment list.

O.7.5 CDMA 800 Intermediate Channel List

The contents of this section are no longer needed since Appendix K has been updated in V3.3.

O.7.6 Waiver of UE Based Testing for A-GPS OTA for LTE

Section 6.13.3 requires GPS OTA testing over LTE using SUPL 2.0 positioning procedures which is commonly referred to as User Plane mode. Section 6.13.3.1 indicates that the test applies to both UE (User Equipment) based and UE assisted A-GPS devices and if both UE based and UE assisted A-GPS is supported by a device that both modes need to be tested.

However, it has been determined that the GPS information is not cleared when the Reset UE Positioning Information message as defined in 3GPP TS 36.509 is sent when operating in User Plane mode. Therefore, UE-Based testing in User Plane mode will not yield valid results.

UE-Based testing for A-GPS OTA for LTE will not be required for certification testing.

O.7.7 Removal of Head Adjacent A-GPS OTA for LTE Testing for Devices that do not Support VoIP

The contents of this section are no longer needed since Section 6.13.3.1 and Section 6.13.3.2 have been updated to add the note concerning the applicable conditions for removal of head adjacent testing.

O.7.8 OTA Testing of Devices Containing Multiple TX Antennas

O.7.8.1 Devices where the Active TX Antenna Could Change During the Execution of the Test Cases

These are devices where the choice of which TX antenna is active is not a function of the use case of the device. Instead, TX antenna selection is made according to other parameters such as, but not limited to base station control, user control, Rx signal level or other means that originate external to the device. Such a device may switch from one TX antenna to another, but requires specific inputs from an external control source to do so. At this time, devices of this type must measure TRP for each TX antenna individually and the measured values shall be reported accordingly in the Test Report. Devices supporting TX switched diversity are in this device category as well.

1. The manufacturer shall provide either:
   a. Equipment and/or software which will allow the test lab to control which TX antenna is used. Or,
   b. Otherwise identical test devices which are pre-configured for each TX antenna selection.
2. The device manufacturer shall indicate which frequency bands and air interfaces support TX antenna selection.

The antenna with better TRP will be used to determine the pass/fail compliance.

O.7.8.2 Devices where the Active TX Antenna Does Not Switch During the Execution of the Test Cases

These are devices where the choice of which TX antenna is active is a function of the proximity to the user's hand, head or body, or nearby object and is usually determined by sensors contained within the device. Such a device will switch from one TX antenna to another based on the inputs it receives from its own self-contained sensors. The sensors may detect proximity of human tissue (hand, head or body) or may detect proximity of external objects (tables, seats, etc.). In such a device, it is required that the choice of TX antenna of the device remains the same during the TRP test. Below are listed the basic requirements and conditions for two testing mode options, autonomous and non-autonomous defined for FS, BHHL, BHHR, HR, and HL test cases.

1. Autonomous Mode
   a. If the manufacturer chooses, the device is allowed to operate in a fully autonomous mode where it actively chooses the TX antenna depending on the test case during the TRP test.
2. Non-Autonomous Mode
   a. The device manufacturer shall supply a “truth table” that clearly identifies which TX antenna will be used for all of the test cases (FS, BHHL, BHHR, HL, HR).
   b. In addition, the manufacturer shall provide either:
      i. Equipment and/or software which will allow the test lab to control which TX antenna is used for each test case, per the truth table. Or,
      ii. Otherwise identical test devices which are pre-configured for the TX antenna selections per the truth table.
   c. The device is allowed to change the TX antenna that it uses at different RF frequencies within the same band, or when different TX power levels are chosen, or when a different air interface is chosen, or other manufacturer declared conditions, as long as this is clearly indicated in the truth table.

O.7.9 Modifications to Phone Positioning Uncertainty

This section provides an update to the phone positioning uncertainty specified in Appendix G.10.5. The changes are highlighted by underlining the changed text. The text in Appendix O.7.9 replaces the text in Appendix G.10.5 in its entirety. The text in Appendix O.7.9.1 replaces the text in Appendix G.10.5.1 in its entirety. The text in Appendix O.7.9.2 replaces the text in Appendix G.10.5.2 in its entirety.

Due to the lack of availability of many different phone styles and antenna types for Band 41, the lab shall consider the following when performing the experimental evaluations defined in Appendix G.10.4.1, Appendix O.7.9, and Appendix O.7.9.1. For Band 41, the lab shall use three PDA phones instead of the defined six phones (3 monoblock and 3 fold). The lab can

utilize phones with embedded antennas for Band 41 and is not required to use a retractable antenna in the extended position as specified. The lab should attempt to use phones with the antennas located in different locations within the phone.

The phone positioning is the largest phantom related uncertainty and requires careful assessment, especially since it depends on the skills and care of the person conducting the tests. The position of the phone affects the electromagnetic loading with respect to the hand and head, the scattering and absorption properties, orientation with respect to the evaluation plan, etc. The effect of this tolerance on TRP/NHPRP/UHRP/PGRP not only depends on the deviation of the position, but also depends strongly on the phone and frequency. Two methods, an experimental and a numerical technique, are proposed to obtain an uncertainty estimate based on a maximum expected position variation. In order to determine this maximum position variation, the lab must evaluate how their personnel place the EUT on the phantom(s) using any available fixturing, as well as any flexure in their test setup that can cause the position to vary, and then use that maximum positional variation to determine the overall RF impact of the expected variation.

To determine the expected positioning repeatability by the lab technicians a variety of different phone styles, shapes, and sizes shall be evaluated. At a minimum, at least six different phones as described in Appendix O.7.9.1 shall be evaluated. For each phone, perform the following steps:

1. Instruct each technician to attach the phone to the head and/or hand as directed in Appendix A using whatever fixturing is to be used regularly. The technician shall not be "coached" to produce the best setup, although prior training to ensure that the technicians are aware of the proper methodology is recommended.
2. For all phone setups, have an independent observer record the position of the phone relative to the available reference marks on the head and/or hand phantom, as well as the position of the hand relative to the head, when applicable. Recorded information should represent both position offsets in h and v directions (Figure O-1) and the angular rotations r_1 and r_2 (Figure O-1). It is recommended that a repeatable system of photography (e.g., camera(s) on tripod(s) at unchanged or precisely marked locations relative to the head/hand) be used to photograph each setup to allow overlaying the various photographs to evaluate the range of variation in position/orientation from multiple directions (e.g., top, front, and side).
3. For systems where the head/hand combination rotates around a horizontal axis, such that the effect of gravity on the mounting will change throughout the test, the variation in mounting position shall be evaluated as a function of orientation. In this case, mount the head/hand/EUT combination as used and compare the relative positions of the EUT and hand at no less than four positions (every 90 degrees in an above, below, left, right orientation)
4. Repeat steps 1-3 for each technician in the lab, ensuring that each mounting process is started from the same completely disassembled state. For labs with a small number of technicians, the mounting should be repeated multiple times by each technician to produce at least five separate mountings per phone.
5. Repeat steps 1-4 for all technicians.

6. For each phone, determine the maximum deviation from the target reference points described in Appendix A and treat it as a rectangular quantity for each measured dimension h, v, r_1 and r_2. If the sample size is sufficiently large and it has been shown that the distribution is normal, then the standard deviation can be assessed and used in the following evaluation of Appendix O.7.9.2.

In the case where the RF evaluation will be performed on equivalent phone models to those evaluated here, the corresponding variation quantities for each phone model may be used. Otherwise, the maximum variation across all evaluated phone models shall be used for the RF uncertainty evaluation. It is recommended that this procedure is repeated whenever a technician is added to the team.

For relative measurements, if the phone is not handled between measuring both test configurations, then the additional uncertainty due to the positioning error of the EUT with the head/hand phantom will be 0.00 dB for this measurement. Otherwise, this uncertainty should be included twice, once in the reference TRP/TIS measurement, and once in the relative measurement.

O.7.9.1 Experimental Evaluation

The following procedure allows evaluation of the RF impact of the expected positioning uncertainty based on the analysis performed above. Repeated TRP tests with intentional deviations matching those found in the previous analysis shall be used, using any corresponding fixturing, etc. In order to provide sufficient variation in radiation pattern and near-field coupling effects, at least six different EUTs, two for each phantom hand of Appendix A.1.4 (monoblock, fold phone, and PDA grip), each having significantly different device size and shape, shall be used. At least one phone shall have an antenna at the base of the phone, one shall have an antenna on the top, and one phone shall have an antenna embedded in the back of the phone. All phones used in the study should be well characterized and known to be stable.

The RF evaluation shall be performed at the middle channel of the 3GPP Band 41, PCS and Cell bands for each phone used in order to estimate the uncertainty of the 2300-2800 MHz, 1500-2200 MHz and the 700-900 MHz bands, respectively.

For each phone, repeat the following steps:

1. Record the phone model, style, description, ESN, and any other identifying information.
2. Set up and verify proper operation of the OTA test system.
3. Mount the phone in the appropriate hand phantom and attach to the head phantom as described in Appendix A, offsetting the phone from the target position by the maximum offsets as determined according to O.7.9 Step 6.

4. Place the head/hand/phone combination in the test system and measure the TRP at each required channel.
5. Choose the maximum deviation dimension and adjust the phone/hand combination so that it is offset in the opposite direction (reverse the sign of the deviation) and repeat step 4.
6. Choose the next largest deviation and repeat the adjustment for that dimension and repeat step 4.
7. Flip the sign on the first deviation again to put that offset back to its starting position and repeat step 4. At this point, four cardinal positions with the maximum deviation shall have been tested.
8. Continue swapping the sign of the remaining deviation quantities, adjusting the position of the phone, and remeasuring the TRP until no less than six distinctly different positions with the maximum position variation have been evaluated.
9. Calculate the TRP and NHPRP values for each as specified in Appendix B, as well as the UHRP and PGRP corresponding to the UHIS and PIGS values.
10. For each test frequency, determine the maximum delta in dB of each value across the six (or more) head/hand/phone tests.

Once each phone has been tested in this manner, perform the following analysis to determine the uncertainty estimate for the positioning repeatability.

11. For each test frequency, determine the maximum of each TRP/NHPRP/UHRP/PGRP delta in dB across all phones and calculate the standard uncertainty (k=1) due to positioning error using the following formula:

$$u_{positioning}[dB] = \frac{u_{positioning_max}[dB]}{2\sqrt{3}}$$

O.7.9.2 Numerical Evaluation

Alternatively, a Type A uncertainty analysis can be conducted using high-end simulation tools supporting scripting of mechanical positioning. The first step of the procedure, as described in Appendix O.7.9.1, is conducted without measurement. A mechanical position matrix is derived for which the analysis is conducted following the procedures described in Appendix I. The evaluation of the obtained data is also evaluated according to Step 11 of Appendix O.7.9.1.

The following approximation (Equation O.1) shall be used to determine the phone positioning uncertainty:

EQUATION O.1

$$u_{positioning}[dB] = \sqrt{\left(k_1 \cdot |h|\right)^2 + \left(k_2 \cdot |v|\right)^2 + \left(k_3 \cdot |r_1|\right)^2 + \left(k_4 \cdot |r_2|\right)^2}$$

where:

h is the horizontal deviation (see Figure O-1) in mm from the exact position described in Appendix A and must be determined according to the procedure defined below.

v is the vertical deviation (see Figure O-1) in mm from the exact position described in Appendix A and must be determined according to the procedure defined below.

r_1 and r_2 are angular deviations (see Figure O-1) in degrees from the exact position described in Appendix A and must be determined according to the procedure defined below.

$k_1 = 0.18$, $k_2 = 0.07$, $k_3 = 0.14$ and $k_4 = 0.44$ are the sensitivity factors which were determined according to the methodology of Appendix I. The maximum sensitivity has been expanded by the number of degrees of freedom. If the maximum deviations for h, v, r_1 and r_2 are determined according to O.7.9 Step 6, then a rectangular distribution (divisor = 1.73) shall be used. If h, v, r_1 and r_2 are determined as standard deviations, then a normal distribution (divisor = 1) shall be used in Table O-1. These equations are only valid for h and $v \leq 5$ mm and r_1 and $r_2 \leq 2$ degrees.

FIGURE O-1 PHONE POSITIONING UNCERTAINTY COMPONENTS

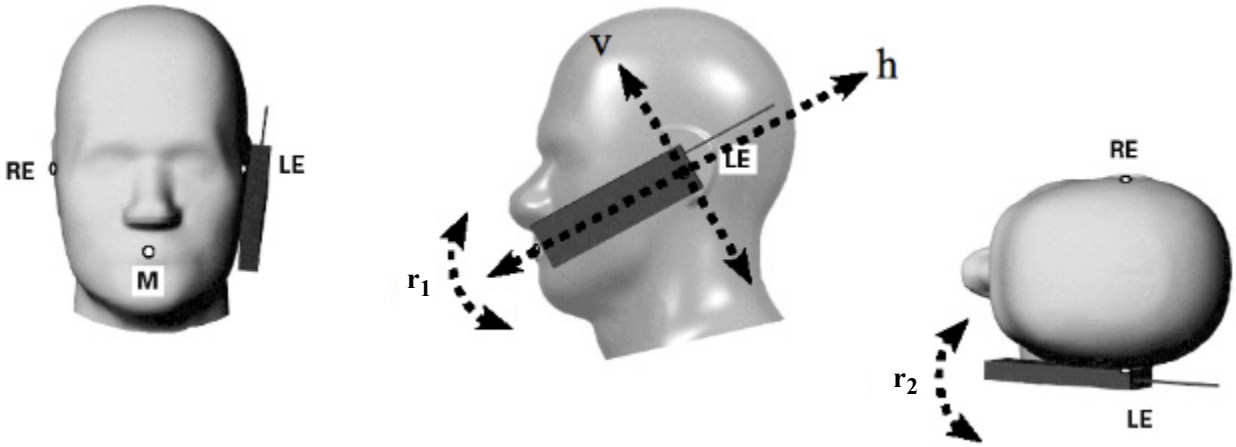

Appendix P Integrated Device Appendix (Normative)

P.1 Purpose

The purpose of this appendix is to define the CTIA Certification program test requirements for performing Radiated RF Power and Receiver Performance measurements on:

- Integrated Devices with an integrated, non-removable antenna attached to the device according to Appendix O.5
- Integrated Devices with a removable antenna physically attached to the device according to Appendix O.5

P.2 Scope

The scope of this appendix is limited to specific setup and measurement criteria to be used when an Integrated Device using an internal or directly attached antenna is submitted to a CATL for RF Performance testing. All other equipment, equipment set up and test procedures documented in the CTIA OTA Test Plan will apply.

P.3 Equipment Under Test - Setup

The EUT shall be tested in a normal operating state, but shall be configured as follows (as it applies). The manufacturer shall provide instructions to the CATL for placing the EUT in this state.

- Transmitting radios:
  - WWAN - On
  - WLAN (Wireless Local Area Network) - Off
  - Bluetooth™ - Off
  - WiMAX™ - Off
  - UWB (Ultra Wideband) - Off
  - All other embedded transmitting radios that are not being tested - Off
- Power Settings
  - Device should be placed into normal operating mode (minus the radio configuration as explained above)
  - Power by battery, if possible, to reduce interference (standard manufacture's battery)

  - Power by AC/DC power supply when needed at manufacture settings and current draw

    (ensure to take care when using a power cord: avoid the antenna and power cord coming in close proximately of each other, if possible, and placing the power cord in ferrite tubing can help reduce RF interference).
  - Device manufacturer to provide CATL with specific guidance
- As required, a user-configurable WWAN antenna will be positioned in accordance with the manufacturer's recommended configuration (See Appendix O for further information)

P.4 Testing of Physically Reconfigurable Devices

Certain devices support usage in more than one physical configuration, such as an Integrated Device placed on a wall or on a desk in normal operating mode (vertical and horizontal plane). Each configuration may produce different radiated performance due to possible changes in antenna orientation (e.g., horizontal and vertical polarization measurements could change). Consequently, such devices may require testing in more than one configuration. At a minimum, the device shall be tested in the manufacturer's recommended configuration(s).

P.5 Integrated Devices with Extendable/Retractable Antennas

Unlike handsets, some retractable antennas used for Integrated Devices are functional only in the extended position. In such cases, the device shall only be tested with the antenna in the manufacturer's recommended configuration.

P.6 Multi-Protocol Devices

Embedded WWAN data modules commonly support multiple protocols or air interfaces (e.g., GPRS/EGPRS/UMTS) within the same frequency band. In cases where particular modes are not relevant to the intended use of the EUT, it is allowable to test only a subset of the supported protocols. The device manufacturer shall specify the intended use cases (e.g., test mode, date rate, channel set up).

Note that these guidelines shall not preclude using the alternative single-point and multi-point offset test procedures for TIS and TRP described in the CTIA OTA Test Plan. For example, in the event that the manufacturer and operator agree that voice-mode results are not required for certification, the CATL may nevertheless opt to measure TIS and TRP in a voice mode to take advantage of the test time optimization provided by those alternative procedures. The manufacturer should be aware that certain protocols not required by the operator for certification may nonetheless be needed by the CATL and should be available on the device submitted for testing.

P.7 Free Space Testing

As most Integrated Devices are not body-worn, the EUT shall be tested in a Free Space configuration.

The Integrated Device may be held in the defined free space position by a custom designed holding fixture. The holding fixture shall be made of a material with a dielectric constant of less than 5.0, and loss tangent less than 0.05. The fixture shall not extend beyond the footprint of the Integrated Device by more than 20 mm, and shall be no more than 20 mm in thickness.

Note: *If body worn is needed, the manufacture shall work with the carrier to determine the testing needed and communicate this to the CATL.*

P.8 Chamber Placement

To minimize the physical volume occupied by the EUT during testing, the center of rotation shall be the three-dimensional geometric center of the EUT and not the antenna.

P.8.1 Positioning an Integrated Device Relative to the Chamber Coordinate System

The reference plane for the EUT is defined as the plane on which the base of the EUT sits. This plane will be normal to the phi axis of the chamber.

Before placing the EUT in the chamber, place the Integrated Device on a level surface and measure the height, width and depth (*H*, *W*, *D*) of the device to determine the center of each (mark with tape if need). The center of the height, width and depth of the device shall be located at the origin of the chamber coordinate system.

FIGURE P-1 INTERNAL ANTENNA

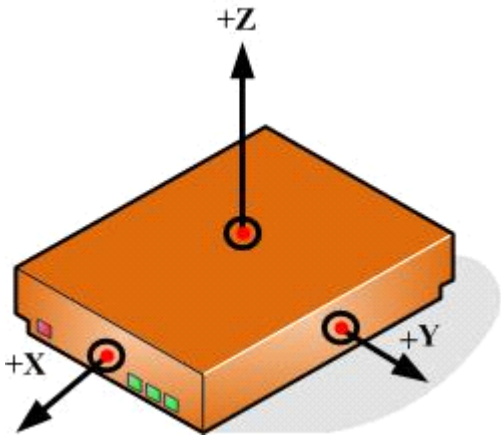

FIGURE P-2 DIRECT CONNECT EXTERNAL ANTENNA (IT DOES NOT MATTER WHERE THE ANTENNA IS LOCATED AS YOU WILL CENTER ON THE DEVICE)

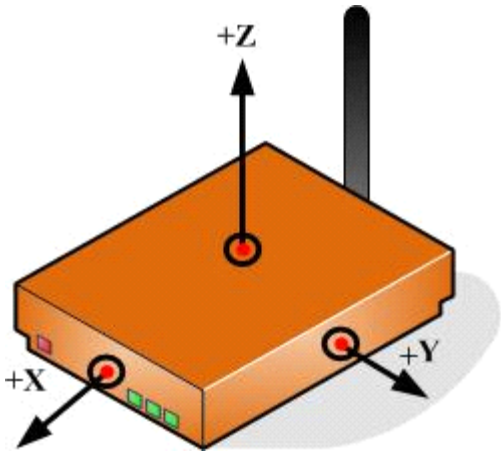

P.8.2 Minimum Measurement Distance Considerations

Due to the large form factor of some Integrated Devices, the minimum measurement distance criteria, in particular, the $2D^2/\lambda$ limit specified in Section 3.1 of the CTIA OTA Test Plan cannot be satisfied on shorter ranges.

To cover the large form factor devices the CATL shall stay within the Notebook PC Sized quiet zone size dimensions detailed in Section 3.6.

However, an additional standard uncertainty value must be included in the total EUT measurement uncertainty calculation to account for the violation of the far field as identified in Appendix G.19.1

P.9 Additional Measurement Uncertainty

P.9.1 Ripple Uncertainty

The ripple uncertainty associated with larger devices shall be determined as described in Section 3.7 and Appendix G.8 of the CTIA OTA Test Plan, using data collected from the additional ripple test procedure for notebook-sized volumes defined in Section 3.6.

P.9.2 Uncertainty Due to Minimum Measurement Distance

Please refer to Appendix P.8.2 for guidance

P.9.3 Additional Coarse Sampling Grid Uncertainty

The TIS measurement uncertainty associated with using a 30° pattern grid spacing is discussed in Appendix G.12 of the CTIA OTA Test Plan. It is conceivable that this source of uncertainty is worse for devices larger than the hand and head phantom configuration for which this effect was originally assessed.

Appendix Q List of Cited References (Informative)

The documents listed in this appendix are cited throughout the document and denoted by numbers in square brackets, for example, [3]. These documents are separate from the Applicable Documents listed in Section 1.3.

TABLE Q-1 LIST OF CITED REFERENCES

Reference Number	Document
[1]	Foegelle, M.D., *Antenna Pattern Measurement: Theory and Equations*, Compliance Engineering, 2002 Annual Reference Guide, Vol. XIX, No. 3, pp. 34-43.
[2]	This section was adapted directly from IEEE Std 1528-2003™. Refer to this document for additional clarification.
[3]	Ofli E., Chavannes N., and Kuster N., *The Uncertainties and Repeatability Limitations of Transmitter and Receiver Performance Assessments Posed by Head Phantoms,* Proc. IEEE International Workshop on Antenna Technology (IWAT06), pp. 349-352, New York, 2006.
[4]	Gabriel, C., "Tissue Equivalent Material for Hand Phantoms," *Physics in Medicine and Biology*, 52 (2007), pp. 4205 - 4210,
[5]	W.C. Jakes, Editor, *Microwave Mobile Communications*, John Wiley & Sons, 1974, Chapter 3.
[6]	This terminology is borrowed from T. Taga, *Analysis for Mean Effective Gain of Mobile Antenna in Land Mobile Radio Environments*, IEEE Transactions on Vehicular Technology, Vol. 39, No. 2, May, 1990.
[7]	Stutzman & Thiele, *Antenna Theory and Design*, First Edition, John Wiley & Sons, 1981, pages 38 and 49.
[8]	See for example Cheney and Kincaid, *Numerical Mathematics and Computing*, Second Edition, Brooks/Cole Publishing, 1985, pp. 161 ff.
[9]	NIST, "*Guidelines for evaluating and expressing the uncertainty of NIST measurement results*", Technical Note 1297 (TN 1297), United States Department of Commerce Technology Administration, National Institute of Standards and Technology, Gaithersburg, MD, 1994.

TABLE Q-1 LIST OF CITED REFERENCES

Reference Number	Document
[10]	IEEE, 1528-2002 SCC34 Draft Standard: *Recommended Practice for Determining the Peak Spatial-Average Specific Absorption Rate (SAR) in the Human Body Due to Wireless Communications Devices: Experimental Techniques*, April 2002.
[11]	Li C-H., Ofli E., Chavannes N., and Kuster N., "*The Effects of Hand Phantom on Mobile Phone Antenna OTA Performance*", Proc. Second European Conference on Antennas and Propagation, EuCAP 2007, Edinburgh, UK, November 11 - 16, 2007.
[12]	NIS 81, "*The Treatment of Uncertainty in EMC Measurements*," Ed. 1, NAMAS Executive, National Physical Laboratory, Teddington, Middlesex, TW11 0LW, England, 1994.
[13]	Gregory, A.P., and Clarke, R.N., "*Dielectric Metrology with Coaxial Sensors*", Meas. Sci. Technol. 18 (2007), 1372 -1386.
[14]	Gabriel, C., Chan, T.Y.A, and Grant, E.H., "*Admittance models for open ended coaxial probes and their place in dielectric spectroscopy*", Physics in Medicine and Biology, 39 (1994), pp. 2183 - 2200.
[15]	"*Optimized procedure for dielectric property characterization of moldable materials*", Indexsar Ltd. Application Note AppNote 08005
[16]	"*Basics of Measuring the Dielectric Properties of materials*," Hewlett-Packard Company, Application Note 1217-1.
[17]	A. Toropainen, P. Vainikainen, A Drossos, *Method for accurate measurement of complex permittivity of tissue equivalent liquids*, Electronic Letters 36 (1), 2000, pp32-34.
[18]	NPL National Physical Laboratory, "A Guide to the characterization of dielectric materials at RF and microwave frequencies", ISBN 0 904457 38 9 (2003), pp. 10ff, 107ff.
[19]	IEEE P1528.1™/D1.0 Draft *Recommended Practice for Determining the Peak Spatial-Average Specific Absorption Rate (SAR) in the Human Body from Wireless Communications Devices, 30 MHz - 6 GHz: General Requirements for using the Finite Difference Time Domain (FDTD) Method for SAR Calculations*
[20]	IEEE P1528.4™/D1.0 Draft *Recommended Practice for Determining the Peak Spatial Average Specific Absorption Rate (SAR) in the Human Body from Wireless Communications Devices, 30 MHz - 6 GHz: Requirements for Using the Finite-Element Method for SAR Calculations*, specifically involving Vehicle-Mounted Antennas and Personal Wireless Devices

TABLE Q-1 LIST OF CITED REFERENCES

Reference Number	Document
[21]	Beard, B.B, et al., "*Comparisons of Computed Mobile Phone Induced SAR in the SAM Phantom to That in Anatomically Correct Models of the Human Head*", IEEE Transactions On Electromagnetic Compatibility, Vol. 48, No. 2, p. 397 - 407, May 2006.
[22]	IEEE P1528.3™/D2.0 Draft *Recommended Practice for Determining the Peak Spatial-Average Specific Absorption Rate (SAR) in the Human Body from Wireless Communications Devices, 30 MHz - 6 GHz: General Requirements for using the Finite Difference Time Domain (FDTD) Modeling of Mobile Phones/Personal Wireless Devices*
[23]	Huff, J.D, et al., "*USING SPHERICAL NEAR-FIELD TRANSFORMS TO DETERMINE THE EFFECTS OF RANGE LENGTH ON THE MEASUREMENT OF TOTAL RADIATED POWER*", 34th Proceedings of the Antenna Measurement Techniques Association (AMTA-2012), Bellevue, WA, October 2012.

Appendix R Revision History

Date	Revision	Description
October 2001	1.0	• First Revision
December 2001	1.1	• Modified measurement distance • Added definition for minimum measurement distance • Changed sleeve dipole to Calibrated Substitution Antenna • Modified simulated head reference information and head fluid recipe
March 2003	2.0	• Added Measurement Uncertainty section • Added appendix on calculating uncertainty values • Identified individual measurement procedures for Conical Cut and Great Circle Cut • Modified Test Procedure - Radiated Power for CDMA • Modified Test Procedure - Receiver Performance for CDMA • Modified Signal Level Ripple Within Quiet Zone • Modified Test Site Characteristics & Quiet Zone Accuracy • Modified Power Measurement Considerations • Added detail to test report requirements • Added additional detail to SAM Head Phantom definition • Editorial revisions • Changed title to “Test Plan for Mobile Station Over the Air Performance”

Date	Revision	Description
April 2005	2.1	• Updated requirements for EUT submission • Allowed alternative configuration of SAM head phantom centered on Phi axis of rotation • Defined maximum allowable phantom fluid bubble size • Corrected step 2 of the Theta-axis ripple test • Replaced Substitution Part with Range Reference Measurement and expanded procedure • "Modified TRP test procedures - Standardized formatting of sub-sections - Added alternate test procedures for TRP where multiple protocols occupy the same band - Added GPRS and EGPRS test procedures - Adjusted initial settings in base station parameters tables - Added conducted power test procedures • Modified TIS test procedures - Standardized formatting of sub-sections - Modified GSM to match single-ended search of CDMA - Allowed higher FER normalized to 0.5% for CDMA - Added procedures for measuring relative sensitivity on intermediate channels - TDMA and AMPS TIS no longer required - Added alternate test procedures for TIS where multiple protocols occupy the same band - Added GPRS and EGPRS test procedures - Added conducted sensitivity test procedures • Replaced Random Uncertainty section with Miscellaneous Uncertainty • Added uncertainty terms for alternative test method and defined previously TBD terms • Defined use of base station simulators for power measurements • Updated Test Set-Up Configuration appendix • Modified summations for near-horizon terms to adequately represent a trapezoidal integration • Updated CDMA power measurement method. **Note:** Empirical data indicate that measurements made under the previous method would be ~ .38 dB ±.32 dB lower than the current method for cellular band and ~ .60 dB ±.18 dB lower than the current method for PCS band. • Harmonized with CTIA Certification Program Management Document

Date	Revision	Description
November 2006	2.2	• Updated Applicable Documents • Clarified wording on the ripple test requirements • Added recommendation to perform TRP/TIS concurrently or allow EUT warm-up time Modified TRP test procedures - TDMA TRP no longer required - Added UMTS TRP test procedures - Added CDMA 1xEV-DO Data TRP test procedures - Added CDMA 1xRTT Data TRP test procedures - Modified the allowable service options for CDMA testing - Updated alternate test procedure for TRP • Modified TIS test procedures - Added CDMA 1xEV-DO Data TIS test procedures - Added CDMA 1xRTT Data TIS test procedures - Added UMTS TIS test procedures - Added alternate test procedure for GSM TIS using less than maximum TX power - Updated alternate test procedure for TIS - Clarified requirements for target digital error rates for each protocol • Added pass/fail criteria for AMPS and CDMA free-space testing • Added Device Power Class to Summation Test Report • Added Intermediate Channel Relative Sensitivity Report • Increased the allowance for TIS uncertainty to ±2.25 dB • Expanded SAM head-reference information • Updated Power Measurement Considerations - Added detail for the use of power meters - Made the RMS detector the default detector for spectrum analyzers and specified required sampling rates - Added EGPRS (8-PSK) power measurement - Added W-CDMA power measurement • Replaced EUT modulation detection uncertainty contribution with sensitivity search step size
January 2008	2.2.1	• Updated GPRS and EGPRS test procedures • Corrected UMTS Maximum TIS Requirements table • Added pass/fail matrix to Summation Test Report table

Date	Revision	Description
December 2008	2.2.2	• Updated section 1.6 • Replaced Table 5-7, Table 5-30, Table 5-34. • Replaced Table 6-1, Table 6-11, Table 6.12 • Replaced all tables in Appendix B introduction (before section B.1)
April 2009	3.0 (Not Published)	• Section 1 modified slightly for hand phantom, and numerous references added. • Section 2 simplified, modified to add hand phantom with head phantom and hand phantom only test configurations, add a section added for the Theta Dependent Phi Step Size Optimization. • Section 3 modified to address new frequency bands, new minimum range distance requirements, references to head and hand phantoms, and notebook sized devices. • Section 4 modified to support new frequency bands. • Section 5 modified to address new frequency bands, hand and head+hand testing, and removal of TDMA and AMPS. • Section 6 modified to address new frequency bands, hand and head+hand testing, removal of TDMA and AMPS, addition of receive diversity, addition of GPS, addition of MediaFLO, and TIS testing using RSS. • Section 7 heavily updated to address hand phantoms, new frequency bands, use of RSS methods, special considerations for Notebook computers, and updated expanded uncertainty limits. • Appendix A heavily modified to include information regarding positioning of devices in the hand phantoms, and the devices with the hand phantoms against the head phantom. • Appendix B modified to include new reporting tables, to address Theta Dependent Phi Optimization, to address UHIS and PIGS, and identification of hand phantoms. • Appendix C heavily modified to include definition of hand phantoms, reference information on hands and other requirements for hand phantoms. • Appendix D modified to remove TDMA and AMPS. • Appendix E modified to correct some technical issues with TIS and TRP definitions, and to address the use of RSS-based methods for TIS.

Date	Revision	Description
April 2009	3.0 (Not Published)	• Appendix G heavily modified all areas of measurement uncertainty. Updated subsections for measurement uncertainty due to hand and head phantoms, and dielectric parameters. New subsections added to address the effect of theta dependent phi optimization on TIS, linearization of RSS measurements, RSS Data from EUT, Reporting Mechanism for RSS data from EUT, Special Considerations for Notebook Computers, Uncertainty due to Difference in Gain over Different Channel Bandwidths, and EUT Positioning/Repositioning. • Appendix H added to describe tissue equivalent dielectric property measurements. • Appendix I added to describe how to use simulations tools to assess measurement uncertainty. • Appendix K added to integrate specific intermediate channels lists. • Appendix L added to address Notebook computer issues. • Appendix M added to list all cited references.

Date	Revision	Description
January 2011	3.1	• **Section 1:** No changes • **Section 2:** No changes. • **Section 3:** Clarified discrepancies in notebook ripple test requirements, added Figure 3-8, Figure 3-9 and Figure 3-10 • **Section 4:** No changes. • **Section 5:** Moved text from Section 5.10.2 to Section 5.10. • **Section 6:** Added power classes to Table 6-9, editorial improvements to notes in Section 6.10 and Section 6.11, updated Table 6-22, editorial improvements to Section 6.13.3, added last two paragraphs for clarity. • **Section 7:** Updated Table 7-2 and Table 7-4, updated expanded measurement uncertainty in Table 7-8. • **Appendix A:** Require all fixtures and tools to use CTIA CAD files, updated A.1.3 hand phantom selection process, updated EUT alignment procedure and setup tolerance in A.1.4, added Figure A-13. • **Appendix B**: Corrected channel numbers in many tables. • **Appendix C:** Updated phantom dimension tolerances and head and hand dielectric tolerances, added notes stating solid tissue equivalents currently not allowed, editorial improvements to C.4.3, removed allowance to test with alternate hand phantoms. • **Appendix D:** No changes. • **Appendix E:** Replaced delta(theta) delta(phi) with delta(phi) delta(theta) in equations. • **Appendix F:** No changes. • **Appendix G:** Added the use of manufacturer data sheet in G.5, added hand phantom dielectric uncertainties, measurements and positioning in G.10, added note in G.17, editorial improvements in G.19. • **Appendix H:** Requires OCP method to be used in H, added note stating solid tissue equivalents currently not allowed. • **Appendix I:** No changes. • **Appendix J:** No changes • **Appendix K:** No changes. • **Appendix L:** Editorial improvements, allow custom free space notebook fixture in L.8, added angle tolerance to L.9. • **Appendix M:** No changes.

Date	Revision	Description
November 2012	3.2	• **Title:** Changed the title to Test Plan for Wireless Device Over-the-Air Performance; Section 1: Removed references to CTIA Program Management Document (PMD); Added allowance to test multiple devices • **Section 2:** Removed head only testing requirements (throughout test plan) • **Section 3:** Added 3GPP bands 12, 17, 13, 14, 25 and removed MediaFLO • **Section 4:** Added 3GPP bands 12, 17, 13, 14, 25 and removed MediaFLO; Added allowance for Ripple Based Calibration; Added calibration correction for wideband channels • **Section 5:** Added Hand Left (HL), Beside Head and Hand Left (BHHL) and removed Beside Head (BHL and BHR); Added TRP criteria values for GSM, GPRS, EGPRS and UMTS; Added LTE TRP Test Procedure; Added CDMA Base Station Parameters for AWS-1 band • **Section 6:** Added Hand Left (HL), Beside Head and Hand Left (BHHL) and removed Beside Head (BHL and BHR); Changed Intermediate Channel sensitivity test method, criteria and test configurations; Added TIS criteria values for GSM, GPRS, EGPRS and UMTS; Added LTE TIS Test Procedures for with and without complex pattern data, added GPS for LTE devices • **Section 7:** Added MU calculations for ripple within quiet zone and wideband frequency flatness; Added MU calculations for mismatch terms; Changed total expanded uncertainty limit values • **Appendix A:** Added Hand Left (HL), Beside Head and Hand Left (BHHL) • **Appendix B:** Added Hand Left (HL), Beside Head and Hand Left (BHHL) and removed Beside Head (BHL and BHR); Added 3GPP bands 12, 17, 13, 14, 25 and removed MediaFLO; Added LTE TRP and TIS; Added test frequencies corresponding to test channels; Added RSS based data reporting • **Appendix C:** Added left hand phantoms • **Appendix D:** Added method of correcting RBW for spectrum analyzer NBW; Added LTE power measurement description • **Appendix E:** No changes • **Appendix F:** No changes • **Appendix G:** Improved mismatch measurement method; Added MU for use of inadequate measurement distance; Added 3GPP bands 12, 17, 13, 14, 25 and removed MediaFLO; Added MU contributor for use of wide bandwidths

Date	Revision	Description
November 2012	3.2	• **Appendix H:** No changes • **Appendix I:** No changes • **Appendix J:** No changes • **Appendix K:** Added 3GPP bands 12, 17, 13, 14 and 25 • **Appendix L:** Clarified notebook fixture allowances • **Appendix M:** New appendix adding optional GSM, UMTS and LTE bands • **Appendix N:** New appendix describing path loss errors induced by propagation delays • **Appendix O:** New appendix incorporating recommended use cases previously described in the CTIA PMD and PTCRB NAPRD03
March 2013	3.2.1	• Various editorial changes and minor corrections were made throughout the test plan. • Appendix O: Subsections O.7.2 to O.7.4 were added to O.7, Special Test Requirements.
August 2013	3.2.2	• Corrected Band 25 frequencies in Table K-7 • Added Appendix O.7.5 to fix CDMA 800 Intermediate Channels

Date	Revision	Description
October 2013	3.3	• Section 1: No changes • Section 2: No changes • Section 3: Added bands 26 & 41. • Section 4: Added bands 26 & 41. • Section 5: Added bands 26 & 41. Added FS limits for CDMA 2100/1700. Removed requirement for GSM HR/HL testing. • Section 6: Added bands 26 & 41. Added FS limits for CDMA 2100/1700. Modified relative sensitivity measurement procedure to remove the single orientation allowance. Removed requirement for BHHR/BHHL testing for AGPS w/LTE and LTE when voice is not supported in LTE. Removed requirement for GPRS, CDMA 1xRTT data and CDMA 1xEVDO ICD testing in some cases. Allowed use of AGPS C/N0 pattern obtained using one cellular mode and band with a different cellular mode and band if the GPS antenna is not dynamically tuned. Removed requirement for GSM HR/HL testing. • Section 7: No changes. • Appendix A: No changes. • Appendix B: Added bands 26 & 41 tables. Added FS limits for CDMA 2100/1700 table. Modified A-GPS for LTE pass/fail summary table. • Appendix C: No changes. • Appendix D: Added TDD mode to LTE power measurements. • Appendix E: No changes. • Appendix F: No changes. • Appendix G: Modified VSWR & Ripple Effect on Range Reference Measurement. Added bands 26 & 41. • Appendix H: No changes. • Appendix I: No changes. • Appendix J: No changes. • Appendix K: Modified Intermediate Channels for CDMA 800. Added bands 26 & 41. • Appendix L: No changes. • Appendix M: Added bands 38, 39, and 40. • Appendix N: No changes.

Date	Revision	Description
October 2013	3.3	• Appendix O: Removed requirement to non-primary mechanical modes at low and high channels. Added bands 26 & 41. Removed requirement for GSM hand-only testing. • Appendix P: Added Integrated Device Appendix (Normative)
July 2014	3.2.3	• **Note: This revision was produced after the 3.3 version and exists separately from 3.3.1.** • Modified relative sensitivity on intermediate channels procedure to clarify handling of secondary antennas. • Selection of closest reference channels for Band 4 updated in Table K-7 • Added waiver in Appendix O.7.6 to remove UE Based testing for A-GPS OTA for LTE. • Added exception in Appendix O.7.7 for head adjacent A-GPS OTA for LTE testing for devices that do not support VoIP. • Added Appendix O.7.8 to clarify OTA testing for devices containing multiple TX antennas
September 2014	3.2.4	• **Note: This revision was produced after the 3.3.1 version and exists separately from 3.3.2.** • Changed recommended limit for GSM HL/HR from TBD to N/A since GSM HL/HR testing is not required • Clarified test applicability for LTE A-GPS OTA testing in Section 6.13.3 • Removed the waiver for LTE A-GPS OTA testing when using LPP as a Positioning Protocol in Appendix O.7.4

Date	Revision	Description
July 2014	3.3.1	• Modified relative sensitivity on intermediate channels procedure to clarify handling of secondary antennas. • Selection of closest reference channels for Band 4 updated in Table K-7. • Added waiver in Appendix O.7.6 to remove UE Based testing for A-GPS OTA for LTE. • Added note in Appendix O.7.7 that this special test requirement is no longer required since it is already covered in the test plan. • Added Appendix O.7.8 to clarify OTA testing for devices containing multiple TX antennas. • Added contact information in Appendix C.4 for parties interested in obtaining the hand phantom CAD files. • Clarified the reporting requirements for the primary antenna and associated receiver for diversity capable DUTs in Table B-77 to Table B-86. • Added Appendix O.7.9 which contains modifications to Appendix G.10.5 indicated by underlined text. • Removed note in Section 6.2.1 concerning the fact that there are no CDMA 2100/1700 pass/fail requirements since pass/fail requirements were added in v3.3.
September 2014	3.3.2	• Changed recommended limit for GSM HL/HR from TBD to N/A since GSM HL/HR testing is not required • Clarified test applicability for LTE A-GPS OTA testing in Section 6.13.3 • Removed the waiver for LTE A-GPS OTA testing when using LPP as a Positioning Protocol in Appendix O.7.4 • Clarified device type and quantity to be used for Band 41 MU assessment of Phone Positioning Uncertainty in Appendix O.7.9 • Removed steps 12 and 13 in Appendix O.7.9.1.